Gate Merging: An NBTI Mitigation Method to Eliminate Critical Internal Nodes in Digital Circuits

Maryam Ghane, Hamid R. Zarandi
Department of Computer Engineering and Information Technology
Amirkabir University of Technology (Tehran Polytechnic)
Emails: mghane@aut.ac.ir, h_zarandi@aut.ac.ir

***Abstract*—This paper presents a method to mitigate Negative Bias Temperature Instability (NBTI) in digital circuits. Since effect of NBTI strongly depends on digital logic value of internal nodes, this method uses internal nodes control (INC) method to reduce NBTI-critical transistors. There are some internal nodes in digital circuits that are under severe NBTI. This method at first, identifies NBTI-critical internal nodes in critical and non-critical paths by calculating probability of being under NBTI stress. Second, it eliminates these internal nodes by combining NBTI-sensitive gates and their driver gates, generating a new complex gate. These complex gates have the same logic and remove any NBTI-critical transistors. The proposed method reduces NBTI in combinational and sequential CMOS circuits and increases their lifetime. Experimental results on ISCAS'89 benchmark circuits show that NBTI-critical transistors, NBTI-induced delay degradation and the number of circuit's transistors are decreased about 86.1%, 15.12% and 4.3%, respectively. However, this method imposes area overhead of 0.2% for the investigated circuits.**

Keywords—Negative Bias Temperature Instability (NBTI); Signal Probability; Gate Merging; Delay.

I. INTRODUCTION

With technology scaling, circuit aging becomes a major reliability challenge for nanoscale transistors. Negative Bias Temperature Instability (NBTI) and Positive Bias Temperature Instability (PBTI) are two main factors in circuit aging [18]. Stress time affects on the amount of NBTI degradation and induces degradation of all the main electrical parameters of the stressed device; such as increasing at threshold voltage, reduction in transcoductance, reduction in linear and saturation current, channel mobility and increasing sub-threshold swing [8]. When NBTI occurs in the PMOS transistors, speed of the circuit reduces and causes the failure over time.

NBTI-induced failure is partially recoverable; when the stress is removed/reduced from PMOS transistor, the degraded threshold voltage can be recovered partially. NBTI has stress and recovery phases [18]. In the stress phase, the PMOS transistor is under stress when it is on, and threshold voltage decreases with time exponentially while recovery phase is the reverse process of stress phase that PMOS transistor is off and the degraded threshold voltage can be recovered.

Several related works are based on NBTI-aware synthesis. These works utilize two methods: internal node control (INC) [1-5] and input vector control (IVC) [6, 19, 20]. The IVC-based methods are utilized to change the zero-probability of the internal PMOS transistors. IVC-based methods can reduce NBTI in circuits, however, they are not sufficiently efficient for larger circuits; they remove NBTI stress from limited transistors. Due to the high controllability of INC, some researches for NBTI mitigation have been proposed based on it [1, 2, 3]. Bild et al. [1] and Wang et al. [2] utilized INC method to reduce NBTI stress from internal transistors. In the first method, when a circuit is in standby mode, control values are assigned to internal nodes [1]. The advantage of this method is reduction of NBTI effects however, it increases leakage power of the circuit. Therefore, it cannot be implemented for deep submicron technologies that have high leakage transistors. In addition, this method destroys the structure of gates so all gates of library should be replaced. The second method, Gate Replacement (GR) method, tries to control the NBTI-critical points for mitigating NBTI effects [2]. However, GR method can control limited critical internal node. Because it cannot assign sleep input signal to all critical internal nodes. Also, this method does not consider delay overhead induced from gate replacement, so it is necessary to consider timing effect of modified gates on the critical path. Another proposed INC method controls critical internal nodes by sleep signal that is made from transmission gates (TG method) [3]. This method utilizes two PMOS and one NMOS transistors to control sleep signal. These PMOS transistors are sensitive to NBTI aging and cause delay and power consumption in the circuit. Also area overhead of this method is considerable.

Based on above discussions, it is necessary to have a method to mitigate NBTI with low overhead in digital circuits. This paper presents a method to mitigate NBTI in digital circuits. Since effect of NBTI strongly depends on digital logic value of internal nodes, this method utilizes INC method to reduce NBTI-critical transistors. There are some internal nodes in digital circuits that are under severe NBTI. This method at first, identifies critical internal nodes in critical and non-critical paths by calculating signal probability of them. As threshold voltage is varied with stress time exponentially, reducing stress duration can mitigate NBTI effect on PMOS transistors significantly. The stress duration can be estimated with zero-signal

978-1-4673-8776-7/16 $31.00 © 2016 IEEE
DOI 10.1109/PDP.2016.90

Authorized licensed use limited to: National Institute of Technology- Delhi. Downloaded on April 14,2026 at 13:48:35 UTC from IEEE Xplore. Restrictions apply.

probability (SP_0); that it means, the probability of being zero on input signal of a PMOS transistor. In this paper, we assume an internal node is critical, if its SP_0 is larger than a threshold. Let this threshold 0.75 in this paper, since our analysis shows 0.75 is the best value of the threshold. Also a transistor is critical, if its input is a critical node. Next, the NBTI-sensitive gates and their drivers are identified. This method removes critical internal nodes by combining NBTI-sensitive gates and their driver gates and replaces them with a new complex gate. These complex gates have the same logic and remove any NBTI-critical transistors. The proposed method reduces NBTI in combinational/sequential CMOS circuits and increase reliability of the circuits. The experimental results on ISCAS'89 benchmark circuits have shown the proposed method decreases the number of NBTI-critical transistors by 86.1% and reduces the number of circuit's transistors 4.3% on average. It improves delay of the benchmark circuits 15.12% after ten years. However, this method imposes area overhead 0.2% for the investigated circuits.

The rest of this paper is as follows: Section II gives an overview of related work. In section III, we present the background of NBTI mechanism, and in section IV, the proposed method for mitigation of NBTI in digital circuits is described. We give the experimental result for a set of ISCAS'89 benchmarks in section V and finally concludes our work in section VI.

II. Related Work

Recent methods of NBTI mitigation are classified into: 1) circuit-level and 2) architecture-level methods. The circuit-level methods are design-time and adaptive methods. Design-time solutions can be classified into gate/transistor sizing [7] and NBTI-aware synthesis [1-6, 19, 20]. Input Vector Control (IVC) [6, 19, 20] and Internal Node Control (INC) [1-5] are two methods that can be combined to synthesis process to mitigate NBTI in circuits.

In order to mitigate NBTI in digital circuits, [4] have proposed an INC-based method with logic reconstruction and pin reordering. This method is based on NBTI effects in transistor stacking and also detecting of symmetries. They have also proposed the method that considered path sensitization [5]. The authors of [9] have proposed a method to control internal nodes. This paper assumes the system/environment produces "sleep" signals that can be used to shift in a new set of external inputs and pre-selected internal signals into the circuit with the goal of INC. This method can be used as a solution for NBTI mitigation [1].

Several IVC methods [6, 19, 20] have tried to mitigate NBTI effects in active mode using input and transistor reordering. INC is more controllabe than IVC, and IVC methods are not sufficiently efficient for larger circuits [23]; INC methods can reduce NBTI-induced reliability degradation efficiently.

Adaptive methods [11, 12], use forward body biasing (FBB) to reduce threshold and speed up the circuits, however voltage threshold reduction may increase the subthreshold leakage exponentially. Dynamic voltage and frequency scaling (DVFS), on the other hand, can reduce threshold voltage by altering the substrate body voltage [13]. Then FBB [14] and adaptive voltage scaling (AVS) [15] have been proposed as two solutions to minimize the power and NBTI effects.

III. NBTI Phenomena and Modeling

In NBTI phenomena, a PMOS transistor has stress and recovery phases. In stress phase, the PMOS transistor is under stress; it means the PMOS transistor is ON and input signal is "0". In this phenomena, some Si-H bonds at the Si/SiO2 interface are broken under the vertical electrical field on the gate oxide [18]. The result of this event generates interface traps and increases threshold voltage. Recovery phase is the reverse process of stress phase that PMOS transistor is off and the threshold voltage recovered. In this process, some of the hydrogen diffuse back and form broken Si and H bonds [18]. In stress and recovery phases, the variation of ΔV_{th} can be modeled by following equations:

$$\Delta V_{th}(t) = \left(K_v(t-t_0)^{0.5} + \sqrt[2n]{\Delta V_{th}(t_0)}\right)^{2n} \quad (1)$$

and,

$$\Delta V_{th}(t) = \Delta V_{th}(t_1)\left(1 - \frac{2\varepsilon_1 t_e + \sqrt{\varepsilon_2 C(t-t_1)}}{(1+\delta)t_{ox} + \sqrt{Ct}}\right) \quad (2)$$

where t_0 and t_1 are the beginning times of stress and recovery phases, respectively. K_v depends on temperature and electrical field value, ε_1 and ε_2 are constants, and t_e is the effective oxide thickness. C is a temperature dependent and δ is a fitting parameter that is less than 1, and t_{ox} is the oxide thickness. A closed-form expression for ΔV_{th} can be driven by,

$$\Delta V_{th}(t) = \left(\frac{\sqrt{K_v^2\, \alpha\, T_{clk}}}{1-\beta_m^{\frac{1}{2n}}}\right)^{2n} \quad (3)$$

where α is the stress probability. More details about this model is mentioned in [18]. Therefore, mitigation of NBTI in digital circuits can be done by reduction of stress probability [16, 17].

IV. The Proposed Gate Merging Method

In this section, we have proposed a method that mitigates NBTI in digital circuits with reducing stress probability of the internal nodes. This method can be applied on combinational and sequential CMOS circuits.

This method, first, identifies critical internal nodes in the circuit by calculating stress probability of them. An internal node is critical, if its zero-signal probability (SP_0) is larger than 0.75. Next, NBTI-sensitive gates and their driver gates are identified. This method eliminates critical internal nodes by combining NBTI-sensitive gates and their driver gates, generates a new complex gates. Then these complex gates replace with sensitive and sensitizer gates.

Authorized licensed use limited to: National Institute of Technology- Delhi. Downloaded on April 14,2026 at 13:48:35 UTC from IEEE Xplore. Restrictions apply.

TABLE I. SP_1 CALCULATION OF PRIMARY GATES [10]

Primary gate	Inputs SP_1	Output SP_1 calculation
AND	S1,S2	$S1 \times S2$
OR	S1,S2	$S1 + S2 - S1 \times S2$
NOT	S1	$1 - S1$

Stress probability of a PMOS transistor P means the probability of P is turned on. In other words, probability of the P's input is "0". Stress probability can be estimated with Signal Probability (SP_1). SP_1 brings this concept that the probability of signal S is "1"; then stress probability can be driven by $1 - SP_1$. The probability of S is "0" is denoted as SP_0.

The method used to compute the SP_1 is as follows [10]: SP_1 of the primary inputs are initialized to 0.5. Then, circuit network gates are levelized by circuit levelization algorithm [22]. Starting from first level gates, their output SP_1s are calculated according to Table I and repeating this step for the gates that SP_1 of their inputs has specific value. This algorithm terminates when SP_1 of the all nodes are specified.

- **Definition1:** A node is critical if its input is turned-on most of the time.
- **Definition2:** A gate is sensitive if its input is a critical node.
- **Definition3:** A gate is sensitizer if its output is a critical node.

Therefore, according to SP_1 calculation method mentioned before, SP_1 of the all internal nodes can be calculated. Then, the NBTI-sensitive gates and their drivers in critical and non-critical paths are identified. First, in the critical path and then in non-critical paths, starting from primary input, combines sensitive gates and their sensitizer gates. These combinations result in complex gates which replace sensitive and sensitizer gates. These complex gates implement the same logic. In GM method, if a sensitizer gate has n fan-outs, n separated similar sensitizer gates are created for combination to each sensitive gate (multiple-gate step). Also, if a sensitizer gate becomes sensitive gate, internal nodes with less SP_1 are removed.

For example, Fig. 1(a) shows transistor-level circuit with $((a+b)' + (c+d)')'$ logic function that consists of 3 NORs, If SP_1 of inputs is 0.5, then $SP_1(m) = SP_1(n) = 0.25$. It means that $SP_0(m) = SP_0(n) = 0.75$ and 75% of times m and n PMOS transistors are ON, then m and n are sensitive nodes. According to the proposed algorithm, 3 NORs can be replaced by a complex gate as shown in Fig. 1(b) where the critical nodes are removed. By removing these critical nodes, there are not any critical transistors under sever NBTI stress. Therefore, the likelihood of NBTI occurrence will be mitigated and lifetime reliability of the circuit will be increased.

Another example, consider circuit of Fig. 2(a). In this figure SP_0 is calculated. According to definitions, in this circuit, *G8* and *G12* are critical nodes; *X2* and *X3* are sensitizer gates and *X5*, *X6* and *X7* are sensitive gates. Therefore, the PMOS transistors of the *X5*, *X6* and *X7* are under NBTI stress. In this circuit, critical path is *X1-X2-X6-X8-X9*. According to definitions, *X2* and *X3* are sensitizer gates and have two fan-outs. Therefore, two similar sensitizer gates *X2'* and *X3'* are replicated in fan-out paths to merge with sensitive gates, separately.

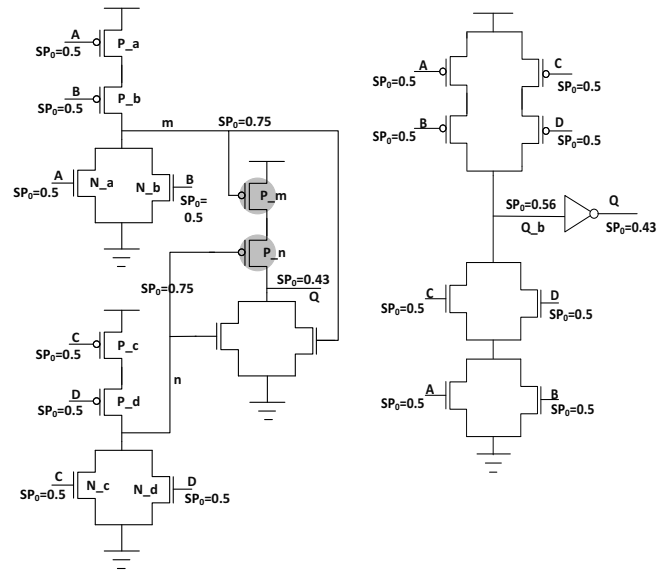

(a) $((a+b)' + (c+d)')'$ 3 NORs

(b) $((a+b)' + (c+d)')'$ complex gate

Fig. 1. An example of combining gates and generation a complex gate to remove internal nodes: (a) a 3 NORs circuit, and (b) its equivalent in complex gate

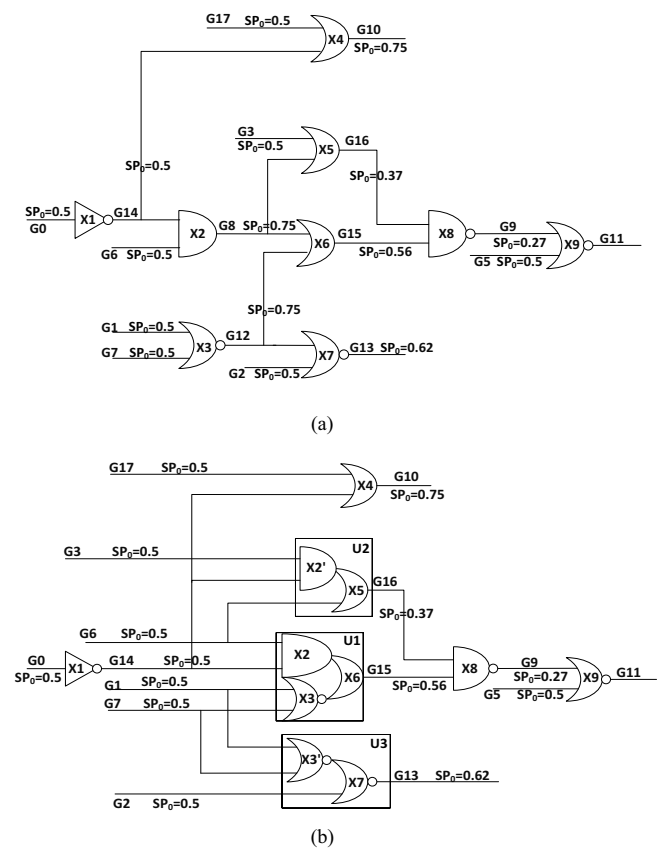

(b)

Fig. 2. An example of combinational circuit to apply the proposed method: (a) A combinational circuit with primary gates and SP_0 of the internal Nodes, and (b) After gate merging and SP_0 of the internal nodes

Authorized licensed use limited to: National Institute of Technology- Delhi. Downloaded on April 14,2026 at 13:48:35 UTC from IEEE Xplore. Restrictions apply.

In the critical path, starting from primary input (*G0*), all the sensitive gates (*X2*, *X3*) and sensitizer gate (*X6*) are combined. Then a complex gate is generated (*U1*) and replaces (X2, X3 and *X6*). Next, in non-critical path sensitive gates and sensitizer gates are merged. Therefore, (*X2'* and *X5) and (*X3' and *X7)* are combined. So, they are generated and replaced with *U2* and *U3* complex gates respectively (Fig. 2(b)).

In the circuit of Fig. 2(a), SP_0 (*G8*) = SP_0 (*G12*) = 0.75 that means 75% of times PMOS transistors of the *X5*, *X6* and *X7* are ON and tolerate severe NBTI stress. Gate-Merging method removes critical nodes and transistors. So, most of the PMOS transistors that were under severe NBTI stress has been removed. Consequently, SP_0 of the circuit decreases and NBTI effects on circuit aging is mitigated.

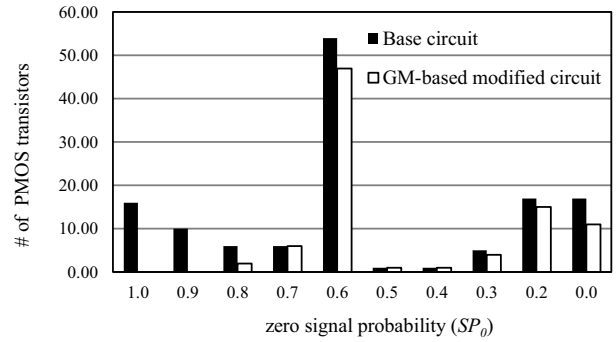

Fig. 3. Number of PMOS transistors of the *S280* circuit for each SP_0

V. Experimental Results

Effectiveness of the proposed method on ISCAS'89 benchmark circuits has been evaluated. All the experiments have been done on a computer consisting of 2.6 GHZ Intel i5-3230 processor and 6 GB memory. In this paper, SP_1 calculations of internal nodes; specifying the gates that have SP_0 more than 0.75 and combination of sensitive and sensitizer gates, which are in the critical path and non-critical paths and finally circuit generation are done with C programs.

Each circuit of ISCAS'89 benchmark, is simulated with 1000 random input vectors. Tables II and III report the simulation result of the proposed method for benchmark circuits. NBTI-tolerant and base circuits are simulated with HSPICE tool [21]. The selected technology is 45nm, Predictive Technology Model (PTM). The supply voltage is 1V and circuits have been under NBTI stress for 10 years.

SP_0 of PMOS transistors in *S280* circuit and its improved circuit are calculated and shown in Fig. 3. Horizontal axis is representative of the SP_0 of the internal nodes and primary inputs. Vertical axis represents the number of nodes with determined SP_0.

The proposed method removes the nodes with high SP_0 by combining sensitive and sensitizer gates. It removes internal nodes with SP_0 that equals to 1, 0.9 and some of the internal nodes that theirs SP_0 is 0.7 in the *S280* benchmark circuit. Therefore, GM method removes 30 transistors (out of 32 transistors) under the NBTI severe stress in *S280* circuit. So in this circuit, 93.7% of critical PMOS transistors have been removed. This method can remove NBTI stress from critical PMOS transistors on average 86.1% (Table III, 9th column), while previous method [5] removes critical transistors 56% on average.

Delays of base and improved circuits are shown in tables II and III. For all circuits, delays of fresh and aged circuit delay after 10 years under the NBTI stress are reported. 2nd and 4th columns report circuit delay without NBTI stress. 6th column

TABLE II. Delay of ISCAS'89 Benchmark Circuits

Circuit	Base circuit		GM-based modified circuit		Improvements	
	Before stress delay (ps)	After stress delay (ps)	Before stress delay (ps)	After stress delay (ps)	Before stress delay (%)	After stress delay (%)
S27	20.2	40.5	20.3	38.6	-0.50	4.69
S280	176	287	166	247	5.68	13.94
S298	263	449	260	372	1.14	17.15
S400	15.9	27.2	15.8	23.2	0.63	14.71
C432	189.2	352.2	159.6	258.9	15.64	26.49
C1355	169	284	161	245	4.73	13.73
Average					4.56	15.12

TABLE III. Area of ISCAS'89 Benchmark Circuits

Circuit	Base circuit			GM-based modified circuit			Improvements		Overhead
	Critical transistors (#)	Total transistors (#)	Sum of transistors width (mm)	Critical transistors (#)	Total transistors (#)	Sum of transistors width (mm)	Reduction of transistors (%)	Reduction of critical transistors (%)	Area overhead (%)
S27	3	42	3.98	0	48	5.60	-14.3	100.0	40.7
S280	32	478	64.9	2	448	62.28	6.3	93.8	-4.0
S298	66	782	39.54	15	704	39.74	10.0	77.3	0.5
S400	26	850	95.28	3	802	79.02	5.6	88.5	-17.1
C432	76	832	139.58	21	758	107.97	8.9	72.4	-22.6
C1355	104	2356	201.28	16	2136	208.79	9.3	84.6	3.7
Average							4.3	86.1	0.2

Authorized licensed use limited to: National Institute of Technology- Delhi. Downloaded on April 14,2026 at 13:48:35 UTC from IEEE Xplore. Restrictions apply.

TABLE IV. SP_0 AVERAGE FOR DIFFERENT ISCAS'89 BENCHMARK CIRCUITS

Circuit	SP_0 of base circuit	SP_0 of modified circuit	Percentage of SP_0 improvement (%)
S27	0.56	0.53	6.1
S208	0.47	0.34	24.4
S298	0.53	0.49	9.5
S400	0.49	0.44	10.2
C432	0.48	0.41	14.6
C1355	0.46	0.38	14
Average			13.1

of Table II shows the percentage of delay overhead of optimized circuit. Delay overhead percentage after stress for the proposed method is reported in 7th column of Table II. The result shows an average improvement of 15.12% with 7% standard deviation.

Table III shows the number of total transistors, removed critical transistors and area overhead for base and improved circuits. According to 9th column of Table III, this method can remove NBTI-stress from critical PMOS transistors about 86.1% on average. As shown in 8th column of Table III, the proposed method utilizes fewer transistor than base circuit. It is because of the combination of two or more gates and its replacement with new complex gates. In the proposed method, area of the circuit is increased 0.2% on average. Because there are sensitizer gates with two or more fan-outs, and according to the proposed method, it is needed two or more sensitizer gates for combination to each sensitive gate. For example, in the *S27* benchmark circuit, because there are two sensitizer gates with two fan-outs (multiple-gate step), one sensitizer gate for each sensitive gate is duplicated. Subsequently, area is increased. However, in other circuits, number of the added transistors in multiple-gate step is fewer than removed transistors in complex-gate step; so, area reduces.

Table IV shows the average of SP_0 for ISCAS'89 benchmark circuits. The proposed method can improve percentage of SP_0 about 13.1% on average. So, it can remove NBTI stress from critical transistors. Because threshold voltage induced from NBTI is varied with stress time exponentially, reducing stress duration can mitigate NBTI effects on PMOS transistors, significantly. In this table, *S298* circuit has most improvement in SP_0 and most reduction in area (6th column of Table III), also this method removes few critical transistors from this circuit (7th columns of Table III). It means that improved circuit has few multiple steps while in other circuits in optimization steps need more multiple gates than *S298* circuit. Therefore, area reduction is maximized and the removed critical transistors are minimized. The result of average SP_0 in Table IV is similar to ninth columns of Table III, and this circuit has minimum difference on average of SP_0.

The proposed method reduces delay of NBTI phenomena about 15.12% on average after 10 years. Furthermore, this method removes NBTI-stress from critical PMOS transistors in the circuit on average 86.1% while previous method [3] reduces NBTI-induced circuit degradation 32.36% and [5] removes critical transistors 56% on average. The experimental result shows the percentage of improvement increases when the stress time increases. Therefore, the proposed method decreases NBTI-induced delay degradation in longer stress time efficiently.

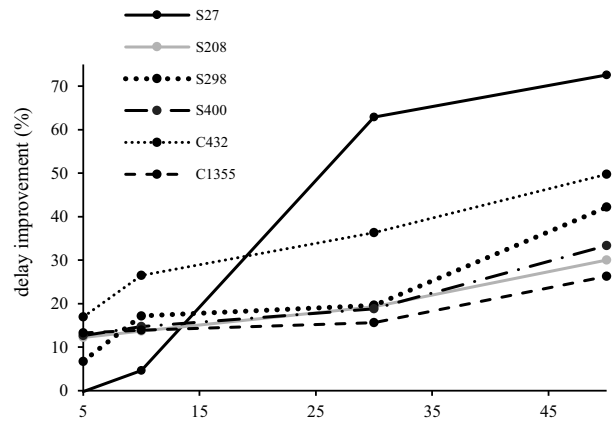

Fig. 4. The percentage of delay improvement for 5, 10, 30 and 50 years NBTI stress in ISCAS'89 benchmark circuits

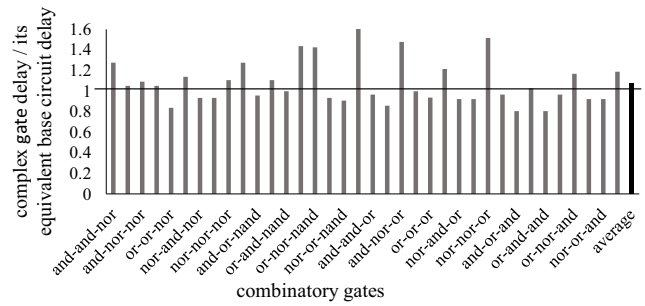

Fig. 5. Comparison of original circuits delay and delay of its equivalent in complex gate with logical effort delay model

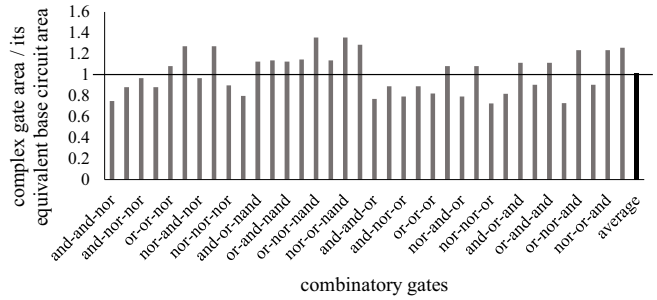

Fig. 6. Comparison of original circuits area and area of its equivalent in complex gate

Fig. 4 shows the percentage of delay improvement for 5, 10, 30 and 50 years NBTI stress in ISCAS'89 benchmark circuits. Base and improved circuits have simulated for different years under NBTI stress, and the percentage of delay improvement has reported in Fig. 4. This result shows the improvement percentage increases when the stress time increases. Therefore,

Authorized licensed use limited to: National Institute of Technology- Delhi. Downloaded on April 14,2026 at 13:48:35 UTC from IEEE Xplore. Restrictions apply.

the proposed method increases performance in longer stress time efficiently.

Fig. 5 and Fig. 6 show delay and area of the gates, respectively. In these figures, vertical lines show the ratio of complex gate delay to its equivalent circuit delay that is made from primary gates. Based on SP_0 calculation of output gates, AND, OR and NOR gates are more likely to be combined with other gates and generate complex gates. So, delay of these gates is calculated and is shown in vertical axis of Fig. 5. Results of Fig. 5 are achieved from logic effort delay model [24]. According to Fig. 5, the average of delay for complex gates is 7% more than the delay of its equivalent circuit that is made from primary gates. Fig. 6 shows the ratio of complex gate area to its equivalent circuit area that is made from primary gates. In this figure, sum of width transistors are consumed as area of the gates. According to result of Fig. 6, area of the complex gate is approximately equal to its equivalent circuit delay that is made from primary gates. However, in this method if sensitizer gate has *n* fan-outs, create *n* similar sensitizer gates for combination to each sensitive gate so, area increases.

VI. Conclusions

By scaling the CMOS technology, Negative Bias Temperature Instability (NBTI) becomes a major reliability challenge, causing the temporal degradation of the threshold voltage of the PMOS transistors, and then delay of digital circuits. In this paper, we exploited NBTI mechanisms and propose a novel method that mitigated NBTI in digital circuits using eliminating stress probability of the critical internal nodes. This method calculated signal probability of the internal nodes and then combined gates that have high SP_0 for removing critical internal nodes. It can apply to combinational and sequential CMOS circuits. Experimental results for ISCAS'89 benchmark circuits showed that the proposed method can reduce the increased delay from NBTI phenomena about 15.12% on average after 10 years. Furthermore, this method reduces NBTI-critical transistors 86.1%.

References

[1] D. Bild, G. Bok and R. Dick, "Minimization of NBTI performance degradation using internal node control," in *Design, Automation & Test in Europe Conference & Exhibition*, pp. 148-153, 2009.

[2] Y. Wang, X. Chen, W. Wang, Y. Cao, Y. Xie, and H. Yang, "Leakage power and circuit aging co-optimization by gate replacement techniques," in *IEEE Transactions on Very Large Scale Integration Systems*, pp. 615-628, 2011.

[3] I.-C. Lin, C.-H. Lin, and K.-H. Li, "Leakage and aging optimization using transmission gate-based technique," in *IEEE Transactions on Computer-Aided Design of Integrated Circuits and Systems*, pp. 87-99, 2013.

[4] K.-C. Wu and D. Marculescu, "Joint logic restructuring and pin reordering against NBTI-induced performance degradation," in *Design, Automation & Test in Europe Conference & Exhibition*, pp. 75-80, 2009.

[5] K.-C. Wu and D. Marculescu, "Aging-aware timing analysis and optimization considering path sensitization," in *Design, Automation & Test in Europe Conference & Exhibition*, pp. 1-6, 2011.

[6] S. Kiamehr, F. Firouzi, and M. B. Tahoori, "Input and transistor reordering for NBTI and HCI reduction in complex CMOS gates," in *Proceedings of the great lakes symposium on VLSI*, pp. 201-206, 2012.

[7] Z. Amini-sheshdeh, and A. Navabi, "Design of improved-reliability nanocircuits with mixed NBTI- and HCI-aware gate-sizing formulation," *IEEE Transactions on Electrical and Electronic Engineering,* vol. 8, no. 6, pp. 587-590, 2013.

[8] J. Franco, B. Kaczer, and G. Groeseneken, "Degradation mechanisms," in *Reliability of High Mobility SiGe Channel MOSFETs for Future CMOS Applications*, Springer Netherlanda, pp. 19-66, 2014.

[9] A. Abdollahi, F. Fallah, and M. Pedram, "Leakage current reduction in CMOS VLSI circuits by input vector control," in *IEEE Transactions on Very Large Scale Integration Systems*, p. 140-154, 2004.

[10] S . Ercolani, M. Favalli, M. Damiani, P. Olivo and B. Ricc6, "Estimate of signal probability in combinational logic networks," in *European Test Conference*, pp. 132-138, 1989.

[11] S. Narendra, A. Keshavarzi, B. Bloechel and S. Borkar, "Forward body bias for microprocessors in 130-nm technology generation and beyond," in *IEEE Journal of Solid-State Circuits*, pp. 696-701, 2003.

[12] S. Roy and D. Z. Pan, "Reliability aware gate sizing combating NBTI and oxide breakdown," *In Proceedings of the International Conference on VLSI Design and International Conference on Embedded Systmes,* pp. 38-43, 2014.

[13] M. Basoglu, M. Orshansky and M. Erez, "NBTI-aware DVFS: a new approach to saving energy and increasing processor lifetime," in *Low-Power Electronics and Design*, pp. 253-258, 2010.

[14] Y. Lee and T. Kim, "A fine-grained technique of NBTI-aware voltage scaling and body biasing for standard cell based designs," in *Design Automation Conference*, pp. 603-608, 2011.

[15] S. Kumar, C. H. Kim and S. Sapatnekar, "Adaptive techniques for overcoming performance degradation due to aging in digital circuits," in *Design Automation Conference*, pp. 284-289, 2009.

[16] W. Wang, S. Yang, S. Bhardwaj, S. Vrudhula, F. Liu and Y. Cao, "The impact of NBTI effect on combinational circuit: modeling, simulation, and analysis," in *IEEE Transactions on Very Large Scale Integration Systems*, pp. 173-183, 2009.

[17] W. Wang, Z. Wei, S. Yang and Y. Cao, "An efficient method to identify critical gates under circuit aging," in *IEEE/ACM International Conference on Computer-Aided Design*, pp. 735-740, 2007.

[18] S. Bhardwaj, W. Wang, R. Vattikonda and Y. Cao, "Predictive modeling of the NBTI effect for reliable design," in *Custom Integrated Circuits Conference*, pp. 189-192, 2006.

[19] Y. Wang, B. Tsinghua Univ, H. Luo, K. He and R. Luo, "Temperature-aware NBTI modeling and the impact of input vector control on performance degradation," in *Design, Automation & Test in Europe Conference & Exhibition*, pp. 1-6, 2007.

[20] Y. Wang, B. Tsinghua Univ, X. Chen, W. Wang and V. Balakrishnan, "On the efficacy of input vector control to mitigate NBTI effects and leakage power," in *Quality of Electronic Design*, pp. 19-26, 2009.

[21] [Online]. Available: http://www.synopsys.com/tools/Verification/AMSVerification/CircuitSimulation/HSPICE/Pages/defa-ult.aspx

[22] S. Even, Graph Algorithms, Rockville, MD: Computer Science Press, 1979.

[23] X. Chen, Y. Wang, H. Yang, Y. Xie, Y. Cao, "Assessment of circuit optimization techniques under NBTI," in *IEEE Design & Test of Computers*, pp. 40-49, 2013.

[24] I.E. Sutherland, and R. F. Sproull, "Logical effort: designing for speed on the back of an envelope," *Proceedings Conference on Advanced Research in VLSI*, pp. 1-16, 1991.

Authorized licensed use limited to: National Institute of Technology- Delhi. Downloaded on April 14,2026 at 13:48:35 UTC from IEEE Xplore. Restrictions apply.