Modeling of NBTI-Recovery Effects in Analog CMOS Circuits

Cenk Yilmaz*, Leonhard Heiß*, Christoph Werner* and Doris Schmitt-Landsiedel*
*Lehrstuhl für Technische Elektronik
Technische Universität München,
Theresienstraße 90/N3, 80333 München (Germany)
phone: +49-89-28922930; fax: +49-89-28922938; e-mail: yilmaz@tum.de

***Abstract*—In addition to the well-known longtime degradation of CMOS circuits by Bias Temperature Instability (BTI) degradation, short stress pulses and subsequent recovery of parameter shifts can cause inaccurate transient response in CMOS circuits. Aging simulations to detect such failures in analog circuits like comparators and analog-to-digital converters require implementation of an analytic BTI model, as ΔV_{th}-shifts and recovery effects have to be analyzed in every simulation time step. Therefore, we developed a simulation model for NBTI degradation including its recovery effects and an implementation of this NBTI model in a SPICE environment. With this toolset, a fast characterization of different circuit topologies is possible. The simulation model covers both DC- and AC-stress. The model is applied to analyze a comparator in switched-capacitor technique. In spite of offset compensation by auto-zeroing, it shows erroneous behavior due to the fast recovering part of the ΔV_{th} shift.**

***Keywords*—NBTI, circuit reliability, degradation, short term threshold instabilities, NBTI recovery model**

I. Introduction

The constant scaling of CMOS devices entails increasing reliability problems. Threshold shift of PMOS transistors due to Negative Bias Temperature Instability (NBTI) is one major issue. Under stress condition, localized traps in the transistor gate insulator capture charge from the channel and thereby degrade the threshold voltage ΔV_{th} of the transistor. This parameter shift increases with time under negative gate bias and at elevated temperature. Explanation of the BTI effect was previously based on reaction/diffusion theory. Yet, recent research results indicate that trapping/detrapping of charges in the gate insulator is the predominant physical effect [1], and measurements of the BTI effect indicate a logarithmic time dependence of the threshold voltage change ΔV_{th} [2], [3].

Fig. 1 illustrates the threshold voltage change induced by NBTI degradation. Under negative gate bias voltage the transistor is stressed and the threshold voltage ΔV_{th} is degrading. After switching off the transistor, the threshold voltage ΔV_{th} is recovering again. The very slowly recovering, so-called permanent part, can cause a reduction of the lifetime of a circuit. The recoverable part causes fast changes in ΔV_{th} which can lead to erroneous transient behavior of a circuit. It was reported that NBTI recovery can cause read errors in SRAM [4], time-dependent offset in differential amplifiers [5] and even timing errors in digital logic gates [6]. Several modeling approaches were made on device level [7]–[10]. An accurate simulation model of the NBTI effect and its recovery was proposed in [11] for circuit level simulation, however it is very computation intensive, since it requires the individual calculation of the ΔV_{th} contribution for each single trap in a MOSFET.

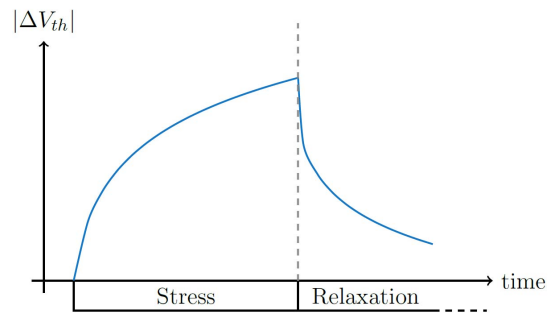

Fig. 1. Illustration of the threshold voltage shift of an exemplary transistor due to stress and relaxation over time

II. Aging Model

Our simulation model uses the Capture/Emission Time (CET) map modeling method and data from [12]. CET maps describe the distribution of capture and emission times of traps in the gate oxide. Every trap can exist in two states: neutral (1) or charged (2), with stochastic transitions between them characterized by the time constants τ_e and τ_c. Fig. 2 shows these transitions as a Markov model and in time domain.

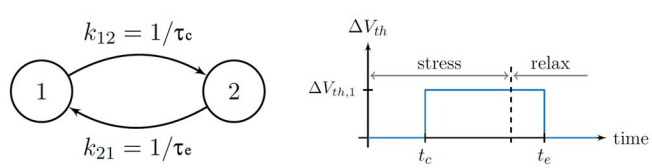

Fig. 2. Markov model of capture and emission processes of a single trap (left) / Representation in the time domain (right).

The transition probability per time from one state to the other is given by the transition rates k_{12} and k_{21}. We define a transition from state 1 to state 2 as *charge capture* and inversely a transition from state 2 to state 1 as *charge emission*. Mathematically the capture and emission time constants τ_c and τ_e are defined as the expected values of the capture

Authorized licensed use limited to: National Institute of Technology- Delhi. Downloaded on April 14,2026 at 13:57:41 UTC from IEEE Xplore. Restrictions apply.

and emission times t_c and t_e. The time constants τ_c and τ_e of single defects have been determined experimentally [13]. The ensemble of all traps is modeled by an $m \times n$ Markov matrix of the transition probabilities determined by the τ_e and τ_c values. Fig. 3 shows the wide range of capture and emission times of an exemplary transistor with 2.2 nm gate oxide. The distribution is modeled by two bivariate log-normal probability density functions. The time constants for a certain trap are weakly correlated. They depend on gate bias voltage and temperature. The absolute number of traps in a transistor increases with the size of the gate and is influenced by technology parameters. The number of active traps depends on gate bias voltage, as can be explained by the energy of a trap state within the band diagram of the gate stack [14].

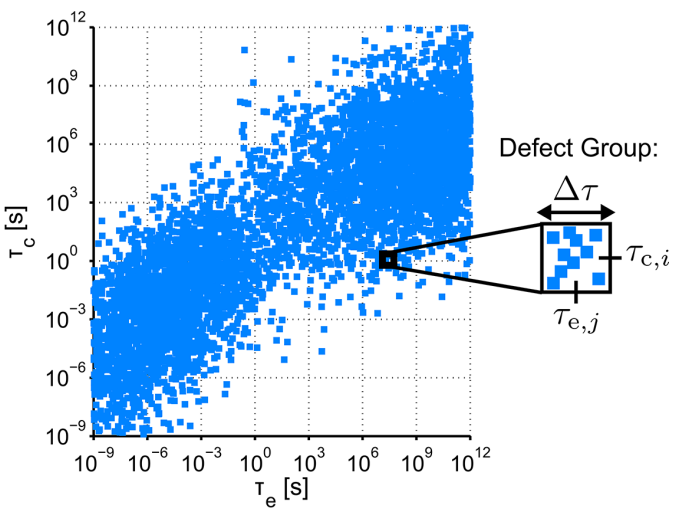

Fig. 3. CET-Map of oxide traps / Example of defect group within window-size $\Delta\tau^2$ with mean values of capture and emission times $\tau_{c,i}$ and $\tau_{e,j}$ (box).

Assuming a trap density of $1 \cdot 10^{12} cm^{-2}$ for an exemplary transistor in 65 nm technology, the number of traps for a transistor in a digital circuit with minimum channel length is not exceeding double digits. To obtain high transconductance and good matching, analog circuits typically consist of large area transistors with a high number of up to thousands of traps.

Calculating the V_{th} shift by summing up the contributions of all single traps would request enormous computation times. Therefore, in our model, traps with similar time constants are combined into a defect group. Thus, simulation time is saved by averaging the time constants within a window of size $\Delta\tau^2$, see box in Fig. 3. The time dependent threshold shift by such a defect group is given by

$$\Delta V_{th,ij} = a \cdot d \cdot \frac{\tau_{e,j}}{\tau_{e,j} + \tau_{c,i}} + (\Delta V_{th0} - a \cdot d \cdot \frac{\tau_{e,j}}{\tau_{e,j} + \tau_{c,i}}) \cdot \exp(-b \cdot t) \quad (1)$$

where the bias voltage dependent prefactor a is given by

$$a = (c_1 \cdot V_{GS})^{c_2} \quad (2)$$

and the time constant factor b by

$$b = \frac{1}{\tau_{e,j}} + \frac{1}{\tau_{c,i}} \quad (3)$$

The term ΔV_{th0} describes the contribution of a single defect group at the time $t = 0$. The density parameter d considers the trap density in each defect group. It is necessary because the time constants are not equally distributed [12]. As the number of active traps is bias dependent, also the maximum possible threshold voltage shift is a function of the applied gate-source voltage. To consider this effect we introduce a voltage dependent prefactor a. The weighting factors c_1 and c_2 are model parameters which are dependent on the used process and technology. In order to adapt the model to the used technology, one has to calibrate the weighting factors c_1 and c_2 to experimental data.

The complete CET map consisting of all defect groups is an $m \times n$ matrix. To obtain the participation of all defects to the total change in threshold voltage one has to evaluate the following equation:

$$\Delta V_{th}(t, V_{GS}) = \sum_{i=1}^{m} \sum_{j=1}^{n} \Delta V_{th,ij}(t, V_{GS}) \quad (4)$$

In this way the total threshold voltage shift can be determined analytically in every stress or recovery step.

III. Model integration into SPICE

In order to identify erroneous behaviour due to short term threshold voltage shifts, the impact of BTI degradation on the transient response of analog circuits has to be analyzed. Therefore, the threshold voltages of the transistors have to be adapted online during a transient circuit simulation. For this purpose we choose a subcircuit approach. The proposed analytic model is converted into a Verilog-A model and acts as a voltage controlled voltage source (VCVS) in series to the gate of the stressed transistor. In each time step of a transient simulation, the current gate-source voltage of a transistor determines the corresponding threshold voltage shift. That way both DC-stress and AC-stress can be modeled. Consequently all input signal forms lead to an accurate calculation of the resulting threshold voltage shift of all stressed transistors.

Fig. 4 shows the simulation flow of the NBTI model. It is divided into three different blocks. A virgin netlist created by a SPICE environment is fed into Matlab. A script analyzes this netlist and identifies all PMOS transistors. Then, an additional voltage source ΔV_{th} based on a Verilog-A model is inserted into the netlist for every PMOS transistor. The CET map for the used technology is analyzed and extracted. Based on the device size and simulation task the defect group size is chosen and the density factor d is calculated for each defect group. The Markov matrix of the capture and emission constants is calculated in dependence of the process parameters.

The technology dependent weight factors c_1 and c_2 are used to calculate the bias voltage dependent prefactor a. The corresponding threshold voltage change $\Delta V_{th}(t)$ and the distribution statistics are extracted using the equations given above. From this, the aged netlist is created and can be simulated within the SPICE environment. Thus, $\Delta V_{th}(t)$ caused by NBTI

Authorized licensed use limited to: National Institute of Technology- Delhi. Downloaded on April 14,2026 at 13:57:41 UTC from IEEE Xplore. Restrictions apply.

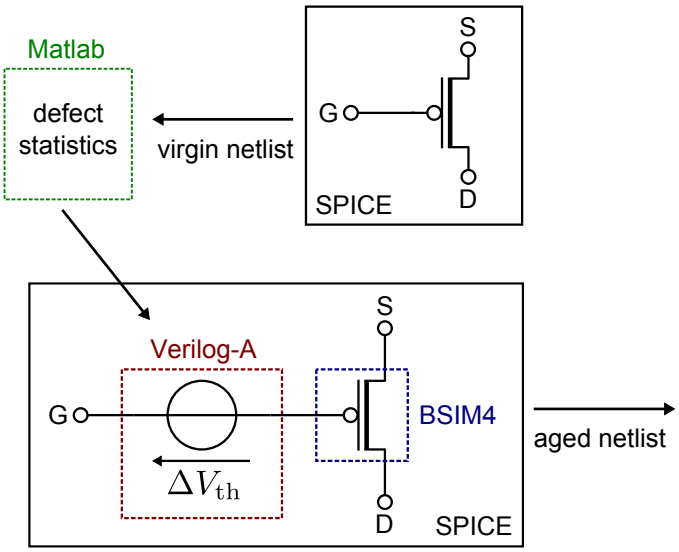

Fig. 4. Schematic block diagram of the simulation model.

degradation is consequently added to the gate-source voltage of each PMOS transistor in every simulation step.

IV. Transient Errors due to Recovery

Gate voltages in most analog circuits are small compared to the supply voltage, therefore the effects of ΔV_{th} are negligible. However operational amplifiers in open loop configuration can be affected by transient changes of the threshold voltage [5], as nearly the full supply voltage range can occur at an input node. This happens when the operational amplifier is used as a comparator, a main component of analog-to-digital converters. A comparator can also be implemented in switched-capacitor technology with auto-zeroing technique for offset compensation, as shown in Fig. 5.

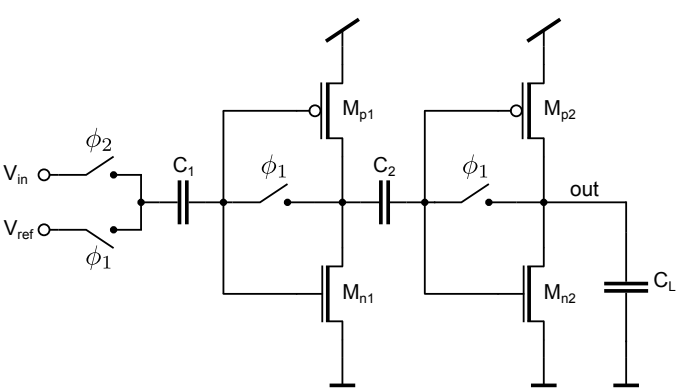

Fig. 5. Switched-Cap comparator based on inverter-chains with auto-zeroing compensation technique.

The comparator uses inverter stages to compare the input voltage V_{in} to a given reference voltage V_{ref}. Table I lists the specifications of the simulated comparator circuit. If the input voltage V_{in} is smaller than the reference voltage V_{ref}, the output will be logical low. For input voltages bigger than V_{ref}, the output will be logical high. Two alternating clock phases ϕ_1 and ϕ_2 are used to cancel out the comparator offset. The inverters are designed to have their switching threshold at

TABLE I. Comparator circuit specifications

Specification	Value
Supply voltage V_{DD}	1.3 V
Reference voltage V_{ref}	0.65 V
Clock frequency	1 MHz
Technology node	65 nm

$V_{DD}/2$, but due to ΔV_{th} variations an offset V_{off} may occur. In clock phase ϕ_1 the reference voltage V_{ref} is connected to C_1, and the offsets of the two comparator stages are sampled on the capacitors C_1 and C_2. In clock phase ϕ_2 the input voltage V_{in} is sampled on C_1. Without auto-zeroing, the comparator would switch according to the sign of

$$V_{in} = V_{ref} + V_{off}. \tag{5}$$

However the auto-zeroing procedure in clock phase ϕ_2 cancels out the offset, and it switches exactly at

$$V_{in} = V_{ref}. \tag{6}$$

Yet, if V_{in} is close to $0\,V$, the transistor M_{p1} has a high gate-source voltage and is prone to NBTI degradation. Fig. 6 shows a signal configuration where the input signal V_{in} is switched from $0\,V$ to a value slightly above V_{ref}. Due to the change of the gate-source voltage V_{GS} during the different clock phases, transistor M_{p1} is alternately in stress (ϕ_2) and recovery (ϕ_1) mode. Fig. 6 shows the transient threshold voltage shift ΔV_{th} triggered by the alternating clock phases.

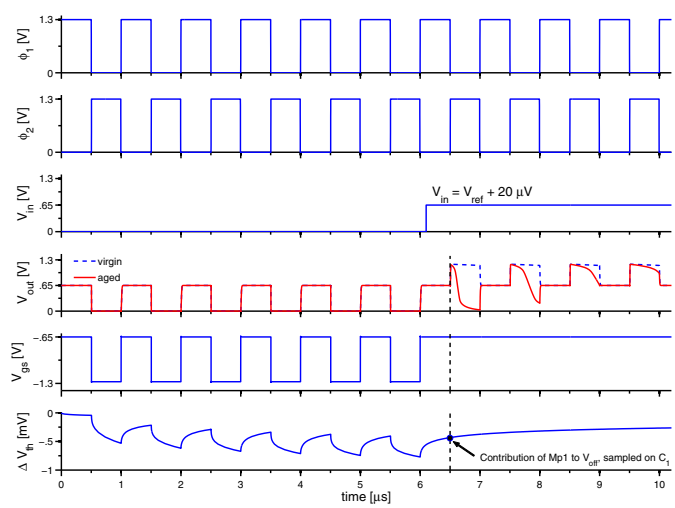

Fig. 6. Non-overlapping clock phases ϕ_1 and ϕ_2, input and output voltage of comparator, gate voltage of M_{p1} and ΔV_{th}.

As the compensation by auto-zeroing refers to the threshold shift at the end of phase ϕ_1, the dynamic offset change caused by NBTI recovery in phase ϕ_2 leads to an inaccurate decision by the comparator: Due to ΔV_{th} relaxation the switching threshold changes over time. Thereby, the offset voltage V_{off} is reduced and differs from the sampled value before relaxation. Thus, in case of V_{in} close to V_{ref}, the

Authorized licensed use limited to: National Institute of Technology- Delhi. Downloaded on April 14,2026 at 13:57:41 UTC from IEEE Xplore. Restrictions apply.

comparator decision is no longer accurate. It can be seen that the comparator delivers erroneous decisions for several clock cycles, until the short term ΔV_{th} is recovered.

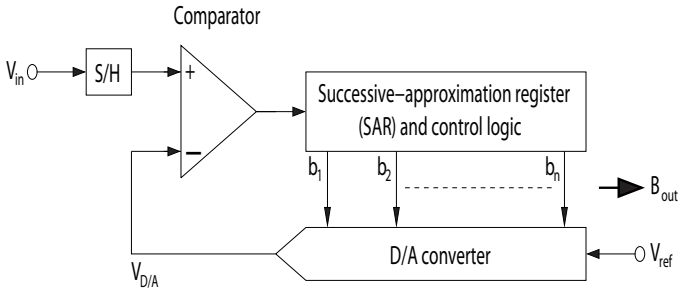

Fig. 7. Schematic block diagram of a SAR-converter

As comparators are used in most converter structures, this error can lead to a conversion error in anlog-to-digital converters. Fulde et al. [15] analyzed the impact of transient threshold voltage variations on different ADC structures. Their research revealed that successive approximation converters are prone to fast changing threshold voltage shifts. As short term NBTI stress and recovery can cause such threshold instabilities, successive approximation converters could deliver erroneous conversion results. Fig. 7 shows a block diagram of a common SAR-converter. A reference signal from a digital-to-analog converter (DAC) is compared to the input signal. In the worst case stress signal scenario the input voltage V_{in} is at V_{DD}-level and V_{DAC} is at $V_{DD}/2$. In this case the short term threshold instabilities caused by NBTI may lead to an erroneous conversion and may cause an error of one LSB or more.

V. Conclusion

Degradation in analog circuits depends on circuit topology and time dependent node voltages. Therefore, we have developed a new simulation model for dynamic and long-term NBTI degradation. It is based on capture and emission statistics of charge traps and uses groups of traps to shorten simulation time for use in circuit analysis. That way transient simulations of analog-sized transistors for reliability examinations are feasible. The proposed model covers DC-stress, AC-stress and recovery behavior depending on stress voltage, temperature and time. To demonstrate the effects of NBTI recovery on analog circuits, we analyzed a comparator in switched-capacitor technology with auto-zeroing technique. Short stress pulses and subsequent recovery can cause switching threshold instabilities and erroneous circuit behavior in spite of the implemented auto-zeroing. With help of the proposed NBTI model, which covers recovery in every simulation step, one is able to reveal that even short term threshold changes can lead to failures in analog circuits like comparators or converters. This shows that dynamic simulation of NBTI recovery is required to identify potential sources of error in analog circuits. The proposed NBTI model is not limited to analog circuits. Also other circuit topologies can be analyzed to identify circuits which are prone to NBTI and especially to fast changing threshold voltage changes. This includes all circuits where metastable states may occur, such as converters, SRAM circuits, oscillator circuits and flip-flops.

Acknowledgment

The authors thank T. Grasser and H. Reisinger for valuable discussions and providing measurement data.

References

[1] T. Grasser and B. Kaczer, "Evidence that two tightly coupled mechanisms are responsible for Negative Bias Temperature Instability in Oxynitride MOSFETs," *IEEE Transactions on Electron Devices*, vol. 56, no. 5, pp. 1056 –1062, May 2009.

[2] S. Rangan, N. Mielke, and E. Yeh, "Universal Recovery Behavior of Negative Bias Temperature Instability [PMOSFETs]," in *IEEE International Electron Devices Meeting (IEDM) 2003*, Dec. 2003, pp. 14.3.1 – 14.3.4.

[3] H. Reisinger, O. Blank, W. Heinrigs, A. Muhlhoff, W. Gustin, and C. Schlunder, "Analysis of NBTI Degradation- and Recovery-Behavior Based on Ultra Fast VT-Measurements," in *IEEE International Reliability Physics Symposium Proceedings 2006*, March 2006, pp. 448 –453.

[4] S. Drapatz, K. Hofmann, G. Georgakos, and D. Schmitt-Landsiedel, "Impact of fast-recovering NBTI degradation on stability of large-scale SRAM arrays," in *Proceedings of the European Solid-State Device Research Conference (ESSDERC) 2010*, Sept. 2010, pp. 146 –149.

[5] F. Chouard, S. More, M. Fulde, and D. Schmitt-Landsiedel, "An aging suppression and calibration approach for differential amplifiers in advanced cmos technologies," in *Proceedings of the ESSCIRC (ESSCIRC) 2011*, Sept. 2011, pp. 251 –254.

[6] V. Huard, C. Parthasarathy, A. Bravaix, C. Guerin, and E. Pion, "CMOS device design-in reliability approach in advanced nodes," in *IEEE International Reliability Physics Symposium 2009*, April 2009, pp. 624 –633.

[7] H. Reisinger, T. Grasser, W. Gustin, and C. Schluender, "The statistical analysis of individual defects constituting NBTI and its implications for modeling DC- and AC-stress," in *IEEE International Reliability Physics Symposium (IRPS) 2010*, May 2010, pp. 7 –15.

[8] H. Kufluoglu, C. Chancellor, M. Chen, and V. Reddy, "An analysis of the benefits of NBTI recovery under circuit operating conditions," in *IEEE International Reliability Physics Symposium (IRPS) 2012*, April 2012, pp. 2F.3.1 –2F.3.6.

[9] M. Kole, "Circuit realiability simulation based on Verilog-A," in *IEEE International Behavioral Modeling and Simulation Workshop, 2007. BMAS 2007.*, Sept. 2007, pp. 58 –63.

[10] B. Kaczer, S. Mahato, V. de Almeida Camargo, M. Toledano-Luque, P. Roussel, T. Grasser, F. Catthoor, P. Dobrovolny, P. Zuber, G. Wirth, and G. Groeseneken, "Atomistic approach to variability of Bias-Temperature Instability in circuit simulations," in *IEEE International Reliability Physics Symposium (IRPS) 2011*, April 2011, pp. XT.3.1 –XT.3.5.

[11] M. Toledano-Luque, B. Kaczer, P. Roussel, T. Grasser, G. Wirth, J. Franco, C. Vrancken, N. Horiguchi, and G. Groeseneken, "Response of a single trap to AC Negative Bias Temperature Stress," in *IEEE International Reliability Physics Symposium (IRPS) 2011*, April 2011, pp. 4A.2.1 –4A.2.8.

[12] T. Grasser, P. Wagner, H. Reisinger, T. Aichinger, G. Pobegen, M. Nelhiebel, and B. Kaczer, "Analytic modeling of the Bias Temperature Instability using capture/emission time maps," in *IEEE International Electron Devices Meeting (IEDM) 2011*, Dec. 2011, pp. 27.4.1 –27.4.4.

[13] T. Grasser, H. Reisinger, P. Wagner, F. Schanovsky, W. Goes, and B. Kaczer, "The time dependent defect spectroscopy (TDDS) for the characterization of the Bias Temperature Instability," in *IEEE International Reliability Physics Symposium (IRPS) 2010*, May 2010, pp. 16 –25.

[14] T. Grasser, "Stochastic charge trapping in oxides: From random telegraph noise to bias temperature instabilities," *Microelectronics Reliability*, vol. 52, no. 1, pp. 39 – 70, 2012. [Online]. Available: http://www.sciencedirect.com/science/article/pii/S0026271411004203

[15] M. Fulde, *Variation Aware Analog and Mixed-Signal Circuit Design in Emerging Multi-Gate CMOS Technologies (Springer Series in Advanced Microelectronics)*, 2010th ed. Springer.

Authorized licensed use limited to: National Institute of Technology- Delhi. Downloaded on April 14,2026 at 13:57:41 UTC from IEEE Xplore. Restrictions apply.