# Run Time $V_{th}$ Extraction Based On-chip NBTI Mitigation Sensor for 6T SRAM Cell

Kuldeep Raghuwanshi[1], Prachi Sanvale[1], Kratika Sharma[1], Vaibhav Neema[1]* and Praveen Singh [1]
[1]Department of Electronics Engineering, IET-Devi Ahilya University, Indore, M.P., India 452017
raghuwanshikuldeep@yahoo.com, prachisanvale@gmail.com, kratikabhardwaj1@gmail.com,
vneema@ietdavv.edu.in, psingh@ietdavv.edu.in

***Abstract*—The aggressive scaling of the CMOS technology has made negative bias temperature instability (NBTI) a key concern in device reliability. The NBTI effect increases the threshold voltage($V_{th}$) and decreases the drain current of PMOS with time. This paper present a Run time $V_{th}$ extraction based NBTI sensor to mitigate the aging effect. Here a close loop system is proposed to compensate the degradation in performance parameter of 6T SRAM cell. The proposed model consists of four modules such as run-time threshold voltage extractor module(aging sensor), voltage generator module, decision making module and transistor width auto-resizer module. All the modules are designed and investigated using PTM 45nm CMOS technology. Circuit level simulation on SRAM cell are performed in pre and post stress condition for 6 years of NBTI effect. The simulation result shows that the threshold voltage is increased by 14.77% which in turn degrades the drain current by 12.8% in 6 year of NBTI effect. Simulation result also shows that the Read SNM and Hold SNM are decreased by 18.59% and 2.97% and Write SNM is increased by 1.6% in 6 year of NBTI stress. It is observed that the proposed sensor increases the drain current to its actual value by just oversizing the width of NBTI affected PMOS transistor by 35.8% and mitigate the effect of NBTI on SRAM cell.**

***Index Terms*—Negative bias temperature instability (NBTI), 6T SRAM cell, Threshold Voltage Degradation, Aging Sensor.**

## I. Introduction

The aggressive scaling of the CMOS technology, extensively increases the complexity in designing reliable and stable CMOS circuits. Due to the ultra-low voltage scaling and oxide thickness scaling towards minimum size, the transistor suffer from various degradation mechanisms such as negative bias temperature instability (NBTI), Hot carrier injection (HCI), Time-dependent dielectric breakdown (TDDB) etc. This degrades the device performance and restricts the device to function properly during their expected lifetime [1]. From all these degradation mechanisms NBTI is considered as the dominant one. Effect of NBTI is observed in P-type of MOSFETs and is considered to be the dominant limiting factor of device lifetime [2][3]. When negative gate to source voltage is applied in PMOS, it leads to the positive significant change in the absolute value of threshold voltage over time. This results in poor drain current and circuit delay degradation [4]. Therefor it is necessary to circumvent the NBTI effect in the circuits.

In the earlier research work various methodologies based on adaptive body bias (ABB), transistor width oversizing and current mirror based circuits are explored to mitigate the NBTI effect. Several NBTI monitoring circuits in [5][6][7] are proposed based on ABB i.e controlling the body biasing of the transistor to settle down the NBTI effect. But these techniques suffer from area overhead. Other techniques based on transistor width oversizing are there to countermeasure the NBTI effect. These techniques resize the transistor width to compensate the aging effect, but these techniques are failed to counter the long run time effect of NBTI. Another NBTI monitoring method based on standby leakage current measurement is used in [8][9] for SRAM cell but this method also requires some additional circuitry therefore making it area overhead.

In this paper we present a run time transistor width auto resizing technique to mitigate the NBTI effect on 6T-SRAM cell. This approach is based on the fact that, NBTI reduces the drain current and increases the response time, if the drain current reduction and delay increment is compensated then NBTI effect can be tolerated. The proposed run time approach increases the drain current to its actual value with respect to positive shift in threshold voltage by oversizing the width of NBTI effected PMOS transistor of SRAM cell and mitigate the NBTI effect.

We have made following contribution to this paper:

- Transistor Width Oversizing(TWOS) based compensation circuit has been proposed to mitigate the aging effect on 6T SRAM cell.
- Threshold voltage extractor circuit has been presented which is used as a run time aging sensor.
- Diode connected based novel reference voltage generator circuit has been proposed.
- Pre and post stress simulation has been performed on SRAM cell and by using proposed TWOS based compensation circuit, the NBTI effect on SRAM cell has been mitigated.

Rest of the paper is organised as follows. Section II describes the effect of NBTI on 6T SRAM cell. Section III presents the working of proposed aging sensor and TWOS based compensation circuit. Section IV explains the simulation results followed by conclusion in Section V.

## II. Effect of NBTI on 6T SRAM Cell

Fig. 1 represent the conventional 6T SRAM cell. It shows that the 6T-SRAM cell has two pull up PMOS transistors(Pwos), two pull-down NMOS transistors(NL & NR) and

978-1-5386-6415-5/ 18/$31.00 © 2018 IEEE

Authorized licensed use limited to: National Institute of Technology- Delhi. Downloaded on April 14,2026 at 13:53:14 UTC from IEEE Xplore. Restrictions apply.

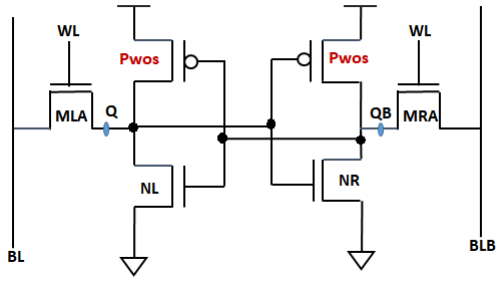


Fig. 1. Conventional 6T SRAM Cell.

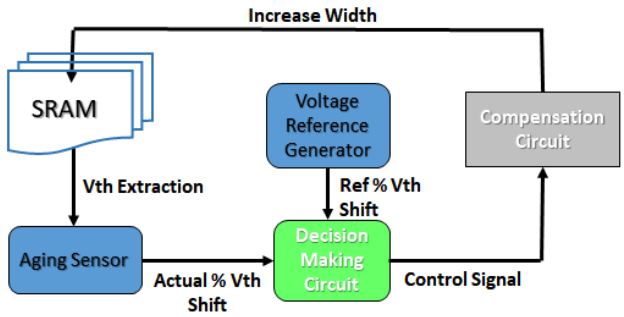


(a)

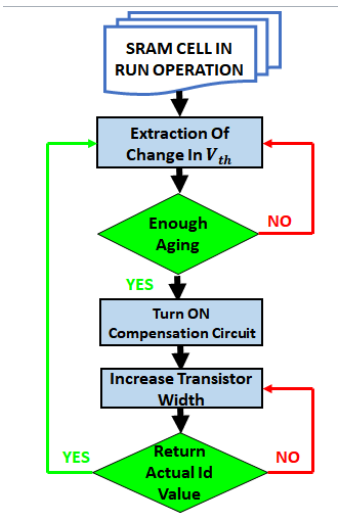


(b)

Fig. 2. (a) Block diagram of proposed model (b) Control flow diagram of proposed model.

two access NMOS transistors(MLA & MRA). The two pull up transistors of the SRAM cell are affected by NBTI. Due to the aging effect there is a positive shift in threshold voltage of these two pull-up transistors and this shift follows a power law model as depicted in [5][10]. This increment in the threshold voltage exponentially decreases the drain current of PMOS transistors which affects several performance parameters of the SRAM cell such as the read SNM, hold SNM, write margin, word line write margin (WLWM), subthreshold leakage current, circuit delay, read failure probability and read access time.

TABLE I
EFFECT OF NBTI ON PERFORMANCE PARAMETER OF 6T SRAM CELL

| Stress Time (Years) | Read SNM (mVolt) | Hold SNM (mVolt) | Write SNM (mVolt) |
|---|---|---|---|
| 0 | 81.17 | 346.75 | 497.69 |
| 2 | 70.34 | 340.56 | 503.85 |
| 4 | 67.92 | 338.13 | 504.11 |
| 6 | 66.08 | 336.44 | 505.85 |

The value of RSNM & HSNM is decreases with stress time due to the decrement of trip point voltage of the left inverter of 6T SRAM cell. RSNM and HSNM has a decrement of 18.59% and 2.97% in 6 year of NBTI stress respectively. But the WSNM of SRAM cell improves with stress time as the node storing logic 1 becomes weaker and writing 0 to the same node becomes easier [10]. It has an improvement of 1.6% . Due to all these performance parameter degradation it is required to explore a proper design that can avoid the effect of NBTI on SRAM cell.

## III. PROPOSED CIRCUIT

In order to make the SRAM cell high resistive against NBTI effect, the proposed methodology uses the concept of transistor width oversizing. Fig. 2(a) represents the complete internal structure of the proposed NBTI mitigation scheme which consists of run time aging sensor circuit, decision making circuit, reference voltage generation circuit and compensation circuit. The threshold voltage of PMOS transistor increases with time which in turn reduces the drain current. Therefore, we introduce a methodology that can sense the threshold voltage change and correspondingly increase the drain current to settle down the NBTI effect. The working of the proposed NBTI mitigation scheme is represented using control flow diagram as shown in Fig. 2(b). The threshold voltage extractor based aging sensor continuously senses the run time change in threshold voltage. The decision making circuit continuously monitors the degree of threshold voltage shift. The decision making circuit decides whether the threshold shift is in acceptable range or not, if not, then it sends a control signal to the compensation circuit. The compensation circuit increase the drain current corresponds to threshold voltage shift by increasing the transistor width and hence mitigate the NBTI effect.

### A. Run time aging sensor

To quantify the NBTI effect, various techniques are used such as threshold voltage shift measurement, delay variation measurement, leakage current measurement etc. Here we adopted threshold voltage extraction method. For this a run time threshold voltage extractor circuit is used as an aging sensor. This aging sensor is a differential amplifier based threshold voltage extractor which is inspired from saturation based $V_{th}$ extractor circuit proposed by Cilingiroglu et al. [11]. Fig. 3 shows Cilingiroglu et al. $V_{th}$ extractor circuit.

Authorized licensed use limited to: National Institute of Technology- Delhi. Downloaded on April 14,2026 at 13:53:14 UTC from IEEE Xplore. Restrictions apply.

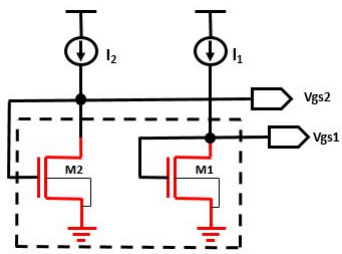


Fig. 3. Saturation based $V_{th}$ Extractor Circuit inspired by [11].

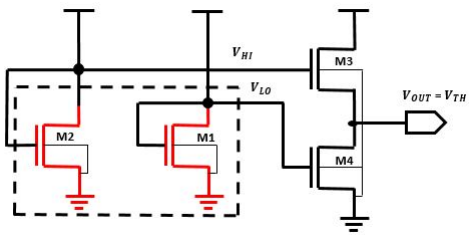


Fig. 4. $V_{th}$ Extractor Circuit Diagram [12].

*a) Mathematical analysis of $V_{th}$ extractor circuit:* From Fig. 3, consider M1 and M2 (both in saturation region) carry equal current and if ignored channel modulation effect then the below equation is derived as:

$$k1(V_{gs1} - V_{th1})^2 = k2(V_{gs2} - V_{th2})^2 \tag{1}$$

Where,$V_{gs1}$ and $V_{gs2}$ are the gate to source voltages and $V_{th1}$ and $V_{th2}$ are the threshold voltages of M1 and M2 respectively. And $k_i$ is device parameter given as

$$k_i = \mu_0 \times C_{ox} \times \frac{W}{L} \tag{2}$$

Now, by choosing

$$k1 = 4 \times k2 \tag{3}$$

and assuming

$$V_{th1} = V_{th2} \tag{4}$$

the threshold voltage is given by:

$$V_{th} = 2V_{gs1} - V_{gs2} \tag{5}$$

The circuit implementation of the equation (5) is incomplete without a differential amplifier therefore the complete implementation of the circuit with a push pull differential amplifier is shown in Fig. 4.

Fig. 4 represents threshold voltage extractor circuit where NMOS (M3 and M4) are used as a differential amplifier that provides a stable subtraction operation. The subtraction operation of push pull differential amplifier configuration is shown in Fig. 5(a), where we kept $V_{HI}$ at constant voltage 1V and varies $V_{LO}$ from 0.25V to 0.60V for nominal subtraction operation. The simulation result shows that the output voltage $V_{OUT}$ is the subtraction voltage of $V_{HI}$ and $V_{LO}$. Now consider M1 and M2 (Fig. 4) are both in saturation and

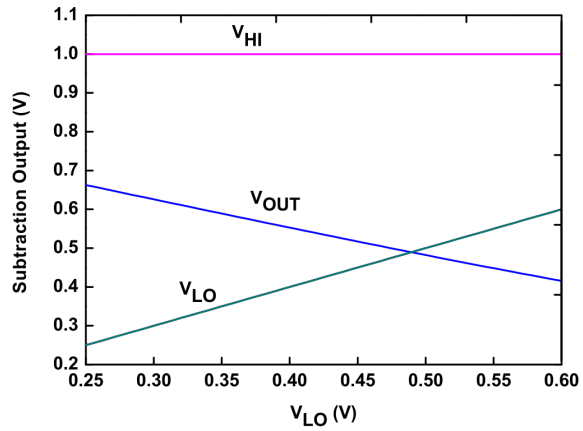


(a)

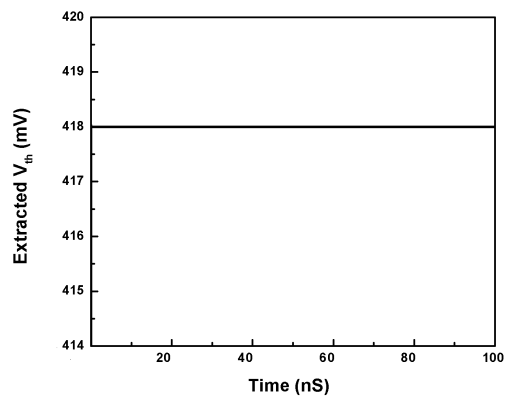


(b)

Fig. 5. (a) Subtraction operation of the push-pull differential amplifier configuration (b) Extracted $V_{th}$ from threshold voltage extractor circuit.

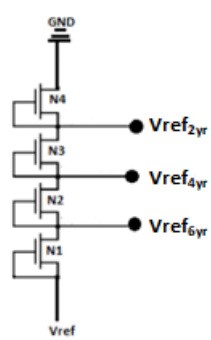


Fig. 6. Reference Voltage Generator Circuit.

have same current. Then their gate source voltages can be considered as same.

$$V_{gs_{M4}} = V_{LO} \tag{6}$$

$$V_{gs_{M3}} = V_{HI} - V_{OUT} \tag{7}$$

where $V_{HI}$ and $V_{LO}$ are the gate voltages of M3 and M4. Equating $Vgs_{M3}$ and $Vgs_{M4}$ to be equal lead to

Authorized licensed use limited to: National Institute of Technology- Delhi. Downloaded on April 14,2026 at 13:53:14 UTC from IEEE Xplore. Restrictions apply.

TABLE II
EFFECTIVE WIDTH FOR VARIOUS INPUT COMBINATIONS

| Input A | Input B | Input C | Effective Width of PWOS |
|---|---|---|---|
| 1 | 1 | 1 | W |
| 0 | 1 | 1 | 2W |
| 0 | 0 | 1 | 3W |
| 0 | 0 | 0 | 4W |

$$V_{OUT} = V_{HI} - V_{LO} = V_{th} \tag{8}$$

Fig. 5(b) shows the simulated waveform of extracted $V_{th}$ from threshold voltage extractor circuit, where the simulations are performed for input range from 0ns to 100ns at constant supply voltage of 1V using PTM 45nm CMOS technology. The sizing of M3 and M4 are tuned such that it gives the transistor $V_{th}$ according to the technology used for simulation.

The extracted output voltage is almost constant means the proposed $V_{th}$ extracted circuit is less affected by temporal degradations.

### B. Reference Voltage Generator

The threshold voltage is extracted using aging sensor. But to quantify the NBTI effect, the extracted $V_{th}$ is required to compare with some sort of reference voltage. For this a decoder circuit is used as reference voltage generator, having diode-connected NMOS configured in series as shown in Fig. 6. This reference voltage generator provides the different voltage levels such as $V_{ref_{2yr}}$, $V_{ref_{4yr}}$ and $V_{ref_{6yr}}$, which are the threshold voltage increment of NBTI affected PMOS in 2, 4 and 6 year respectively. The sizing of the NMOS transistors is such that it provides the voltage drop according to the required reference voltage. Here, for reference voltage, threshold voltage increment is chosen in step size of two years but the designer can choose any step size. Smaller the step size more control over the NBTI effect.

### C. Decision Making Circuit

Fig. 7(a) shows the decision making circuit. The decision making circuit is a comparator made up of NMOS current mirror based differential amplifier. The decision making circuit is designed to take the decision on run time. The inputs of the comparator are drive by the outputs of aging sensor and the reference voltage generator. The output of the decision making circuit provides a controlling signal to the compensation circuit and take a countermeasure against NBTI effect. The simulated waveform of the decision making circuit for a small change in its input is shown in Fig. 7(b). Result shows that, whenever the shift in threshold voltage ($V_{th}$) is higher than the reference voltage ($V_{ref}$), it gives low logic otherwise it gives logic one. Here in the waveform, the trip point is shifted to point (A) due to thermal voltage (26 mV) instead of the crossing point (B) of $V_{ref}$ and $V_{th}$. The shift in trip point is because of sensor sensitivity, means sensor can generate output voltage only if difference between $V_{ref}$ and $V_{th}$ is more than 26 mV.

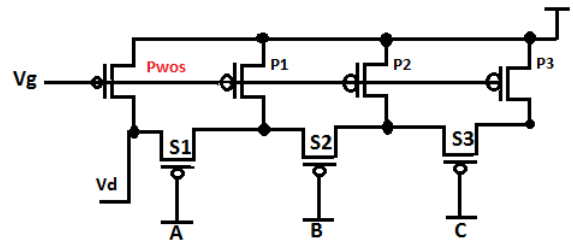


Fig. 8. Compensation circuit for NBTI mitigation.

### D. Compensation Circuit

The proposed compensation circuit as shown in Fig. 8 is a run time transistor width auto-resizer. The main motive of the compensation circuit is to increase the width of the NBTI affected PMOS transistor according to the variation in drain current due to threshold voltage shift. As presented due to aging effect threshold voltage of PMOS transistor increases, resultant of decrement in drain current observed. The aim of the compensation circuit is to recollect the value of drain current by increasing the width of affected transistor. For this the compensation circuit uses the concept that if the width of a transistor is increased then it proportionally increases the drain current.

Consider the same width sizing of all transistors i.e. W for Pwos, P1, P2 and P3 and switches S1, S2, and S3 are turns ON/OFF by applying the input A, B and C which are generated from decision making circuit. If the applied logic for input A, B and C is 111 then it turns OFF all the switches and make the effective width of PMOS to W. Because at combination 111 all transistors will be floating except transistor Pwos. Similarly If the applied logic is 000 then all switches S1 S2 and S3 are turned ON and due to this, transistors P1 P2 and P3 comes in parallel and effective width of PMOS increases to 4W. The input combinations for different effective width requirement is shown in Table II. The drain current ($I_d$) for different transistor width is shown in Fig. 9(b) which represents that if the width of transistor increases then it proportionally increases the drain current. Here, 240nm, 360nm and 480nm are the effective width of transistor Pwos for different input (ABC) combinations.

The compensation circuit for the SRAM cell is generally a parallel connection of PMOS transistor as shown in Fig. 8, where Pwos is NBTI affected PMOS transistor of SRAM cell and P1,P2,P3 are width compensation transistors for Pwos. All parallel connected PMOS share common source terminal connected to $V_{dd}$ and the drain terminal of all the PMOS are in series with connected switches S1, S2 and S3. Now if the threshold voltage (Vth) of Pwos (PMOS) transistor shift with stress time then the decision making circuit generate control signal to turn ON/OFF the switches S1, S2 and S3 of compensation circuit. As switches turns ON, the effective width of PMOS transistor gets increased and it makes the drain current to retain its original value. Hence aging effect gets mitigated. Here Vth shift is taken in steps of 2, 4 and 6 year. According to this Vth shift in 2, 4 and 6 year, decision making circuit generates a control signal A, B and C to turn

Authorized licensed use limited to: National Institute of Technology- Delhi. Downloaded on April 14,2026 at 13:53:14 UTC from IEEE Xplore. Restrictions apply.

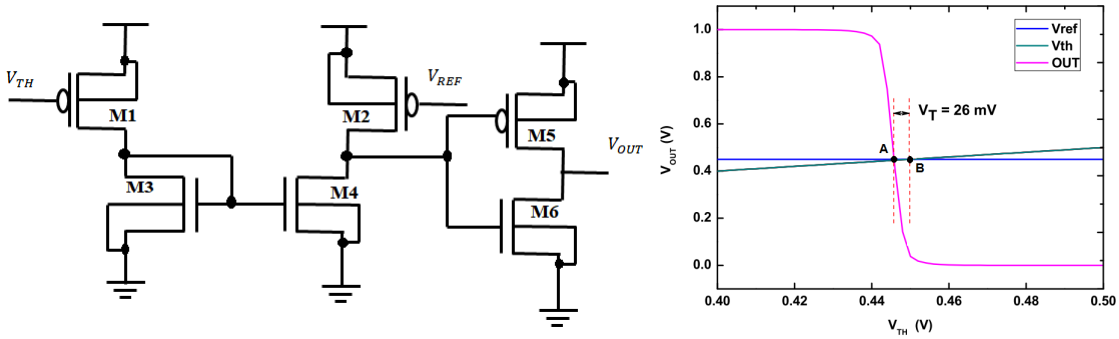


(a) (b)

Fig. 7. Current mirror based comparator circuit implementation (a) Block diagram (b) Comparator circuit output with $V_{th}$ variation.

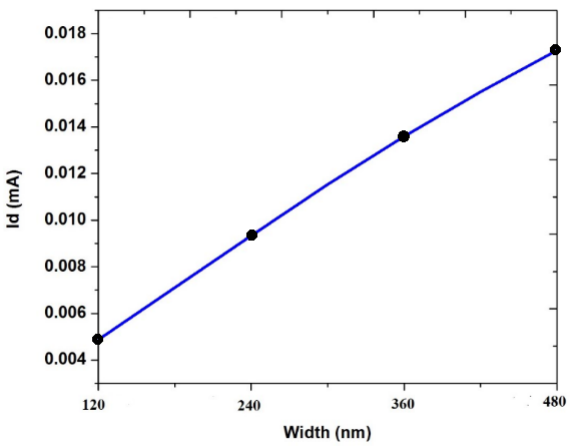


Fig. 9. Effective drain current for different PMOS width.

ON/OFF the switches S1, S2 and S3 to compensate the drain current in the respective years.

For instance, if threshold voltage degradation takes place in 2 years then decision making circuit generate control signal A=0, B=1, and C=1 to turn ON the switch S1 and turn OFF the switches S2 and S3 respectively. This switching increases the effective width of PMOS transisor according to the Vth variation of 2 year and hence mitigate the NBTI effect. In the same manner the NBTI effect is mitigated for 4 and 6 year.

## IV. Simulation Results

This section presents the simulation results performed on 6T SRAM cell and proposed NBTI mitigation circuit. Here all the modules are designed and investigated using PTM 45nm CMOS technology at the supply voltage of 1V. The pre and post stress simulation are performed on 6T SRAM cell using HSPICE MOSRA model for 6 year of NBTI stress at worst case temperature of $125^o$C.

The simulation results shows that due to NBTI effect the threshold voltage of the PMOS transistor of SRAM cell is increased by 11.34%, 13.19% and 14.77% which in turn degrades the drain current to 10.02% 11.82% and 12.85% in 2, 4 and 6 year respectively as depicted in Table III.

TABLE III
Required width increment for $I_d$ current compensation for different stress time

| Stress Time (Years) | Threshold Voltage Increment (mV) | Drain Current Decrement ($\mu A$) | Effective Width Of PMOS (nm) |
|---|---|---|---|
| 0 | 379 | 38.9 | 120 |
| 2 | 422 | 35 | 138 |
| 4 | 429 | 34.3 | 157 |
| 6 | 435 | 33.9 | 163 |

This variation in $V_{th}$ and $I_d$ degrades the main performance parameter of SRAM cell i.e. Write SNM, Read SNM and Hold SNM as shown in Table I.

The WSNM of the SRAM cell increases with stress as the node storing logic 1 become weaker and writing 0 to same node become easier. WSNM has an increment of 1.23%, 1.28% and 1.63% in 2, 4 and 6 year respectively. The value of RSNM and HSNM is decreases with stress time due to the decrement of trip voltage of the left inverter of SRAM cell. RSNM has a decrement of 13.34%, 16.32% and 18.59% while HSNM has a decrement of 1.78%, 2.48% and 2.97% in 2, 4 and 6 year respectively.

In order to mitigate this aging effect on SRAM cell TWOS based compensation circuit is implemented. The compensation circuit increases the width of NBTI affected PMOS transistor by 15%, 30.8% and 35.8% in such a manner that it compensates the drain current degradation in 2, 4 and 6 year respectively. And hence mitigate the NBTI effect.

## V. Conclusion

This work present a novel run time threshold voltage extraction based NBTI mitigation sensor for 6T SRAM cell. Here, in this proposed work, threshold voltage extraction technique is used as an aging sensor to calculate the threshold voltage shift of NBTI effected PMOS transistors. TWOS based compensation circuit is used which increase the transistor width dynamically through a control circuit to mitigate the NBTI effect. To verify the effectiveness of proposed model simulation work has been performed on SRAM cell. Simulation work has been carried out in pre and post stress condition on SRAM cell for 6 year of NBTI effect. Simulation result

Authorized licensed use limited to: National Institute of Technology- Delhi. Downloaded on April 14,2026 at 13:53:14 UTC from IEEE Xplore. Restrictions apply.

shows that the proposed sensor mitigate this aging effect by just increasing the width of NBTI affected PMOS transistor by 35.8%. And hence makes the SRAM cell more stable and reliable against aging effect

The proposed model is not only restricted to SRAM cell but also applicable to all other logic circuits to mitigate the run time NBTI effect.

## REFERENCES


[1] A. P. Shah, N. Yadav, A. Beohar, and S. K. Vishvakarma, "On-chip adaptive body bias for reducing the impact of nbti on 6t sram cells," *IEEE Transactions on Semiconductor Manufacturing*, vol. 31, no. 2, pp. 1–8, 2018.

[2] Y. Wang, M. Enachescu, S. D. Cotofana, and L. Fang, "Variation tolerant on-chip degradation sensors for dynamic reliability management systems," *Microelectronics Reliability*, vol. 52, no. 9-10, pp. 1787–1791, 2012.

[3] D. K. Schroder, "Negative bias temperature instability: What do we understand?" *Microelectronics Reliability*, vol. 47, no. 6, pp. 841–852, 2007.

[4] P. Singh, E. Karl, D. Blaauw, and D. Sylvester, "Compact degradation sensors for monitoring nbti and oxide degradation," *IEEE Transactions on Very Large Scale Integration (VLSI) Systems*, vol. 20, no. 9, pp. 1645–1655, 2012.

[5] K. K. Kim, W. Wang, and K. Choi, "On-chip aging sensor circuits for reliable nanometer mosfet digital circuits," *IEEE Transactions on Circuits and Systems II: Express Briefs*, vol. 57, no. 10, pp. 798–802, 2010.

[6] J. Keane, T.-H. Kim, and C. H. Kim, "An on-chip nbti sensor for measuring pmos threshold voltage degradation," *IEEE Transactions on Very Large Scale Integration (VLSI) Systems*, vol. 18, no. 6, pp. 947–956, 2010.

[7] K. Kang, S. P. Park, K. Kim, and K. Roy, "On-chip variability sensor using phase-locked loop for detecting and correcting parametric timing failures," *IEEE Transactions on Very Large Scale Integration (VLSI) Systems*, vol. 18, no. 2, pp. 270–280, 2010.

[8] K. Kang, M. A. Alam, and K. Roy, "Characterization of nbti induced temporal performance degradation in nano-scale sram array using i ddq," in *Test Conference, 2007. ITC 2007. IEEE International*. IEEE, 2007, pp. 1–10.

[9] Y. Wang, S. D. Cotofana, and L. Fang, "Statistical reliability analysis of nbti impact on finfet srams and mitigation technique using independent-gate devices," in *Nanoscale Architectures (NANOARCH), 2012 IEEE/ACM International Symposium on*. IEEE, 2012, pp. 109–115.

[10] K. Kang, H. Kufluoglu, K. Roy, and M. A. Alam, "Impact of negative-bias temperature instability in nanoscale sram array: Modeling and analysis," *IEEE Transactions on Computer-Aided Design of Integrated Circuits and Systems*, vol. 26, no. 10, pp. 1770–1781, 2007.

[11] U. Cilingiroglu and S. Hoon, "An accurate self-bias threshold voltage extractor using differential difference feedback amplifier," in *Circuits and Systems, 2000. Proceedings. ISCAS 2000 Geneva. The 2000 IEEE International Symposium on*, vol. 5. IEEE, 2000, pp. 209–212.

[12] S. F. Mossa, S. R. Hasan, and O. Elkeelany, "Self-triggering hardware trojan: Due to nbti related aging in 3-d ics," *Integration, the VLSI Journal*, vol. 58, pp. 116–124, 2017.


Authorized licensed use limited to: National Institute of Technology- Delhi. Downloaded on April 14,2026 at 13:53:14 UTC from IEEE Xplore. Restrictions apply.