How We Built an Event-Time Merge of Two Kafka-Streams with Spark Streaming

Ralf Sigmund, Sebastian Schröder
Otto GmbH & Co. KG

SPARK SUMMIT
EUROPE 2016

Agenda

- Who are we?
- Our Setup
- The Problem
- Our Approach
- Requirements
- Advanced Requirements
- Lessons learned

Who are we?

- Ralf
  - Technical Designer Team Tracking
  - Cycling, Surfing
  - Twitter: @sistar_hh
- Sebastian
  - Developer Team Tracking
  - Taekwondo, Cycling
  - Twitter: @Sebasti0n

Who are we working for?

OTTO

- 2nd largest ecommerce company in Germany
- more than 1 million visitors every day
- our blog: https://dev.otto.de
- our jobs: www.otto.de/jobs

Our Setup

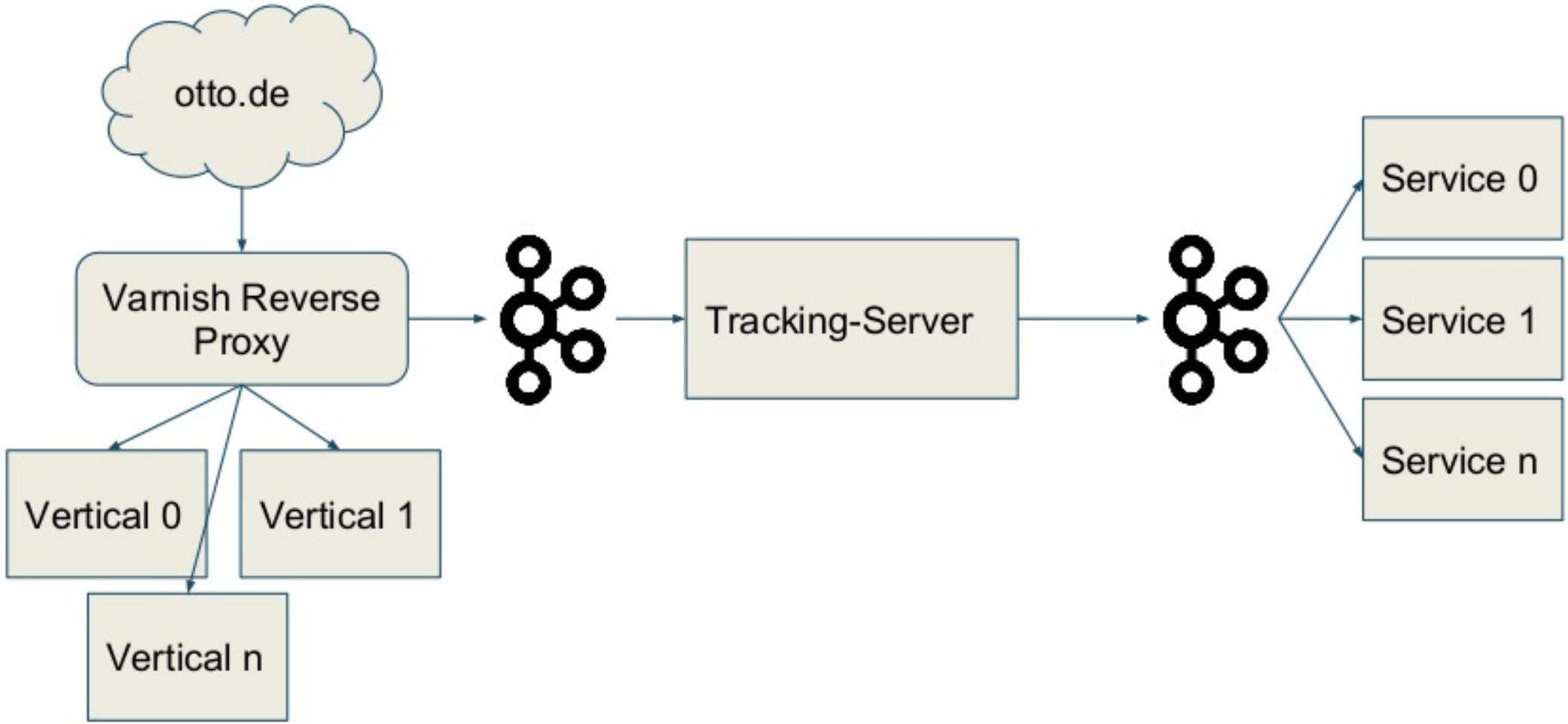

OTTO

The Problem

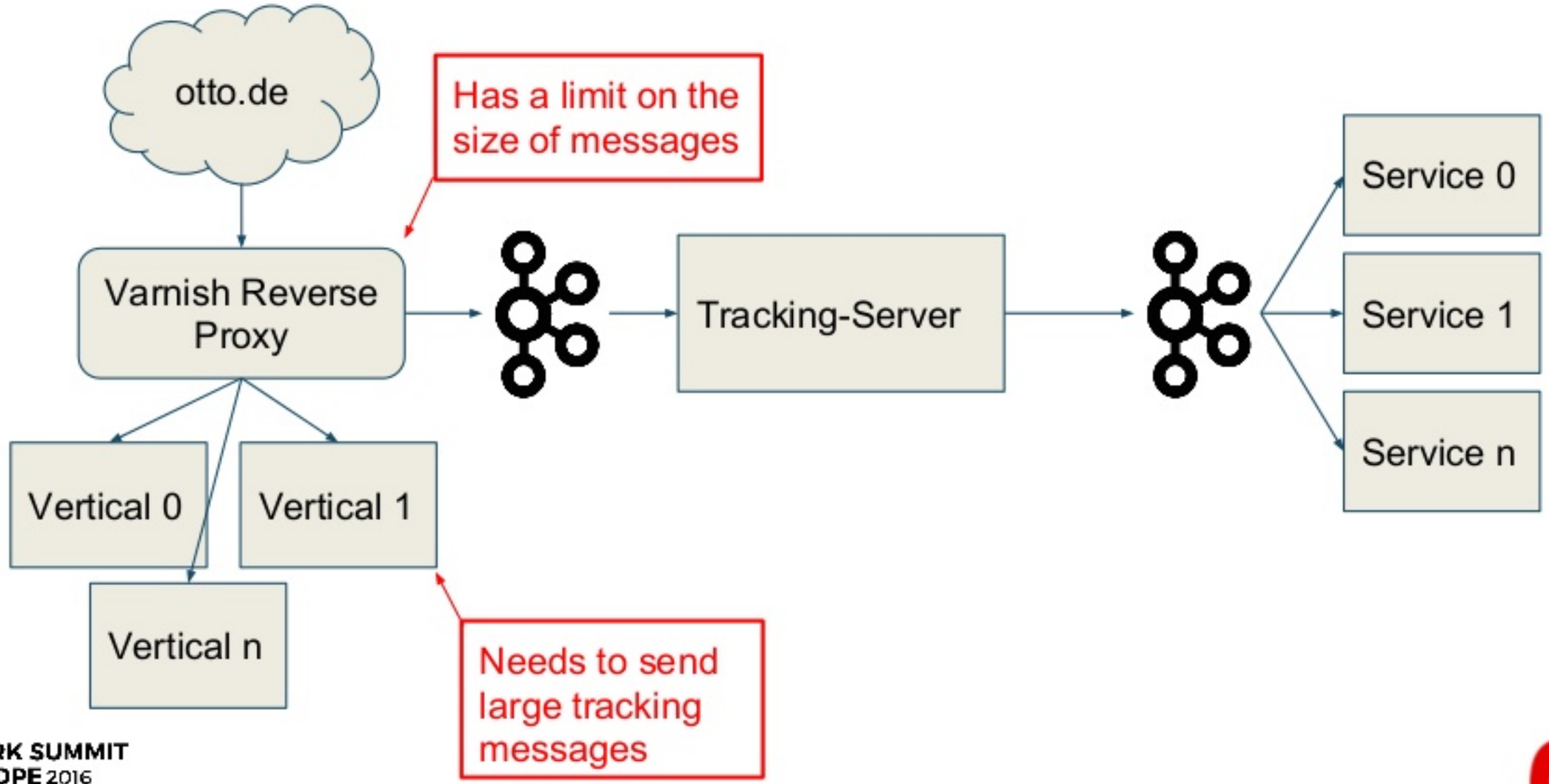

OTTO

Our Approach

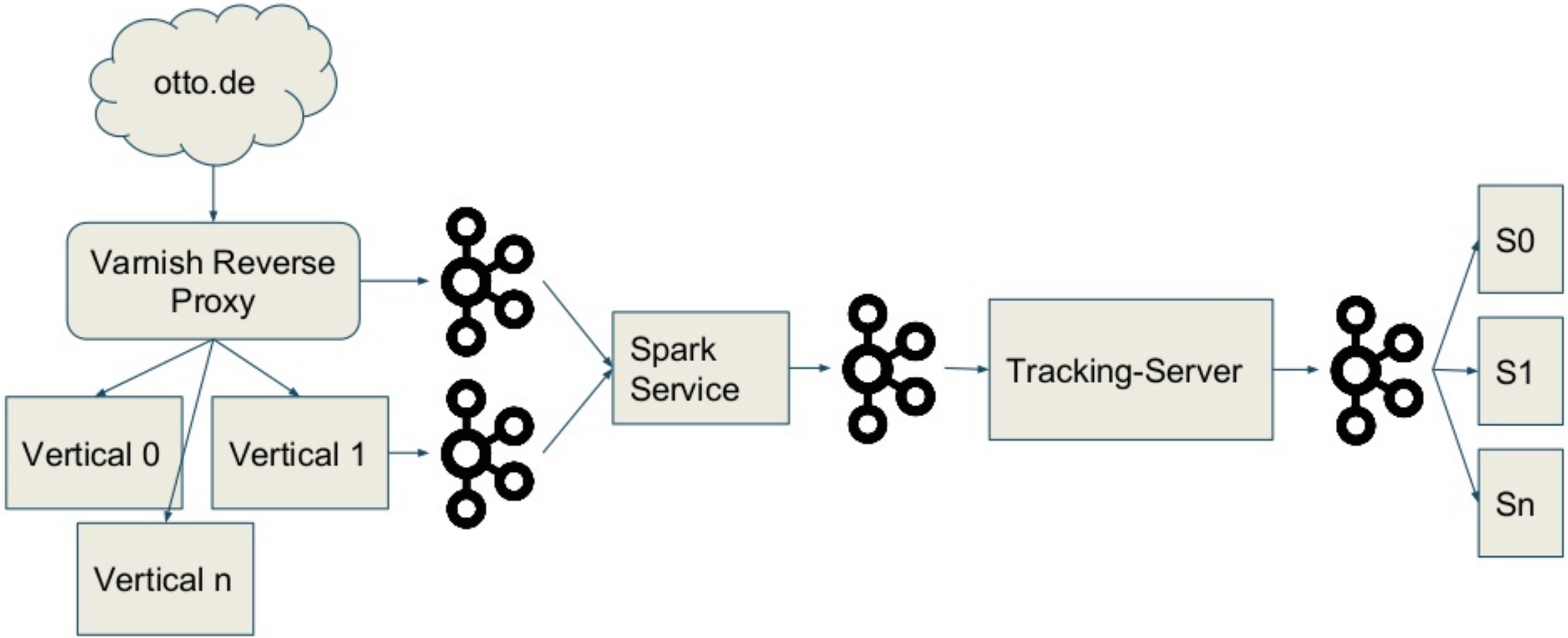

OTTO

Requirements

SPARK SUMMIT
EUROPE 2016

Messages with the same key are merged

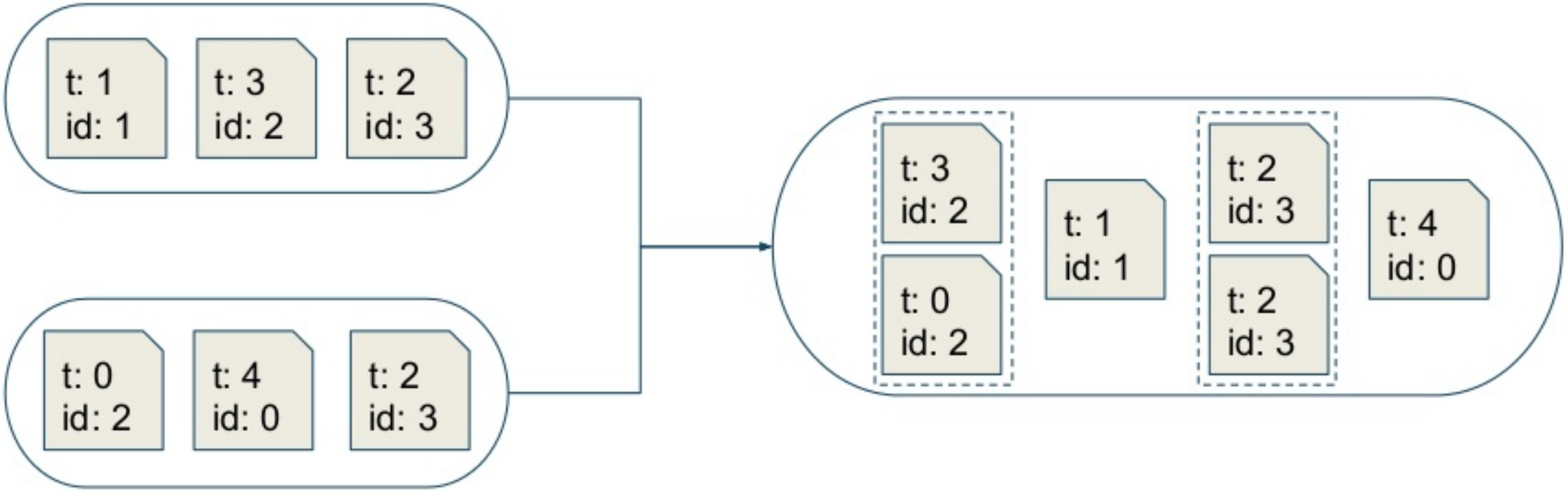

Messages have to be timed out

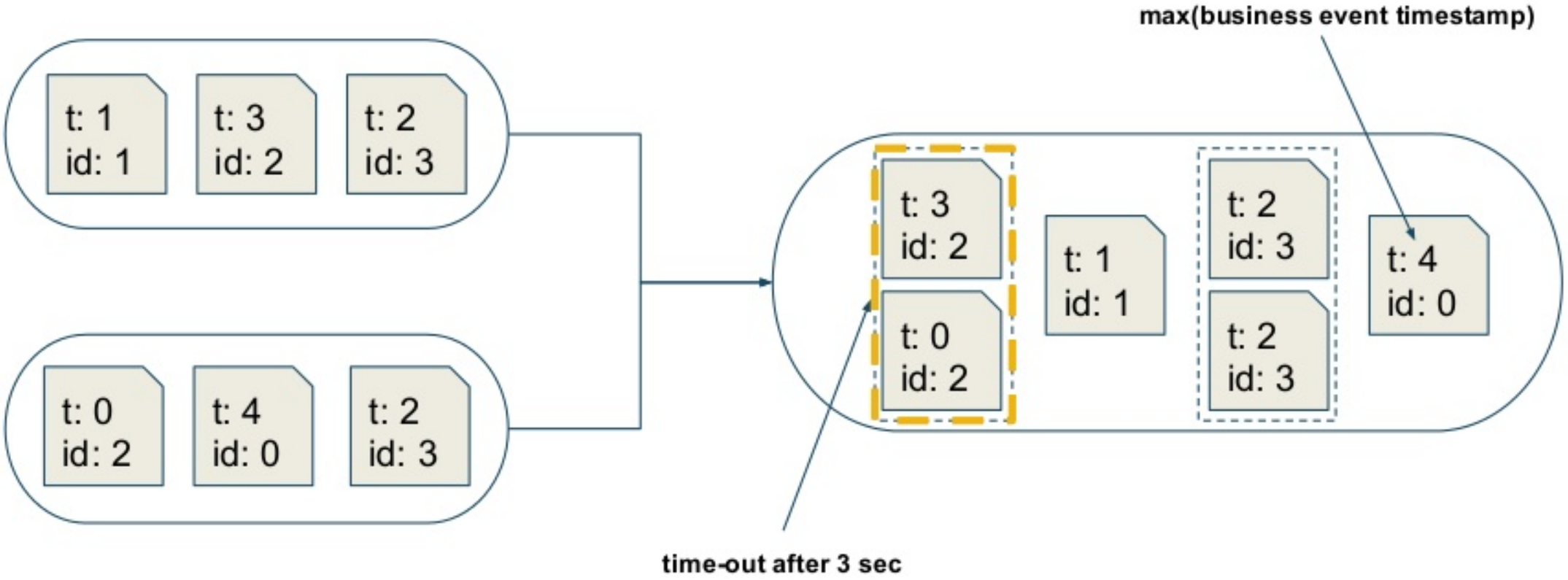

OTTO

Event Streams might get stuck

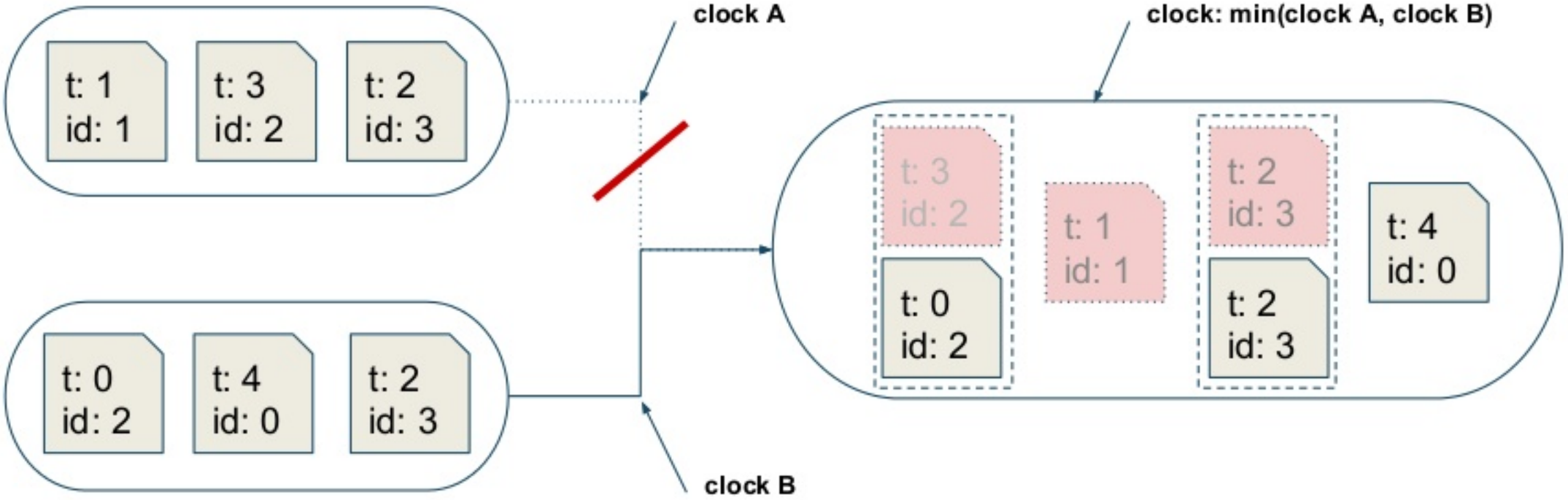

There might be no messages

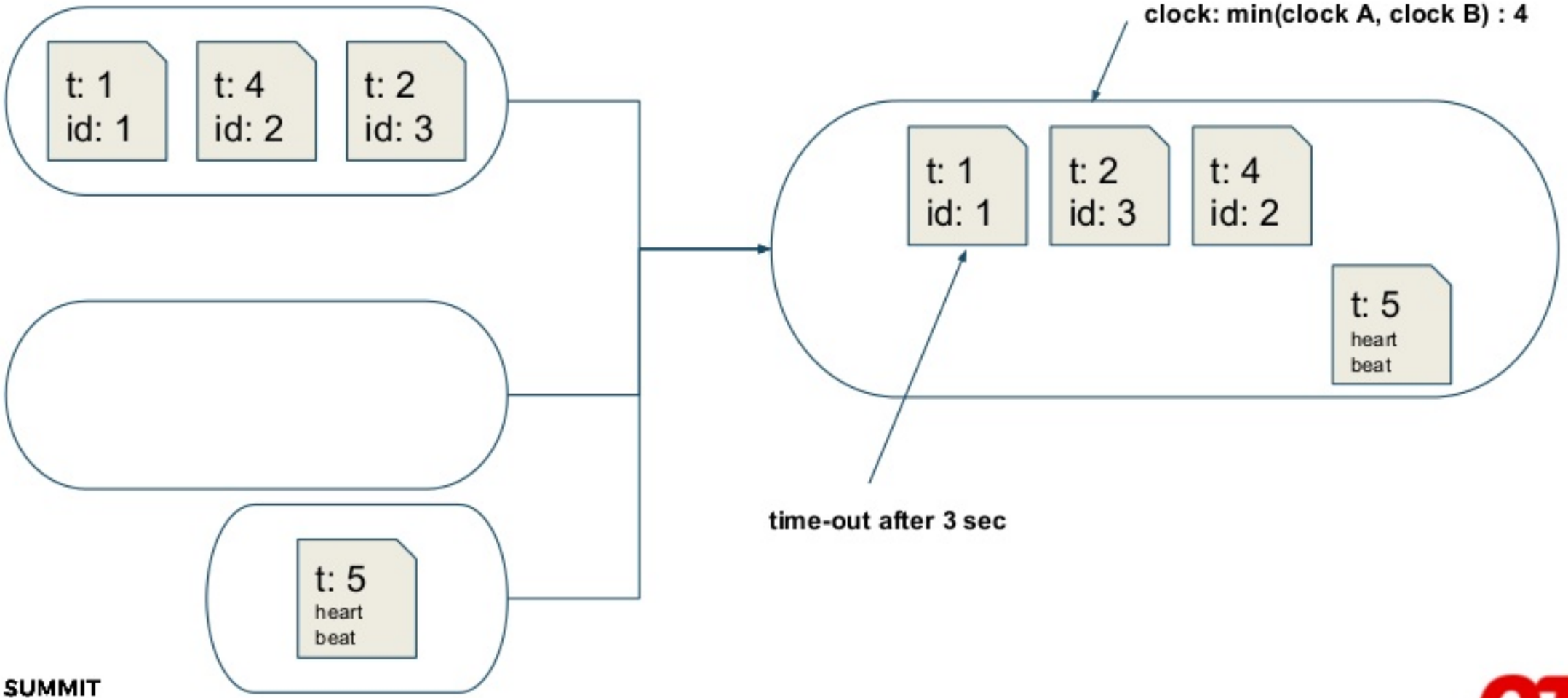

OTTO

Requirements Summary

- Messages with the same key are merged
- Messages are timed out by the combined event time of both source topics
- Timed out messages are sorted by event time

Solution

SPARK SUMMIT
EUROPE 2016

Merge messages with the same Id

- UpdateStateByKey, which is defined on pairwise RDDs
- It applies a function to all new messages and existing state for a given key
- Returns a StateDStream with the resulting messages

UpdateStateByKey

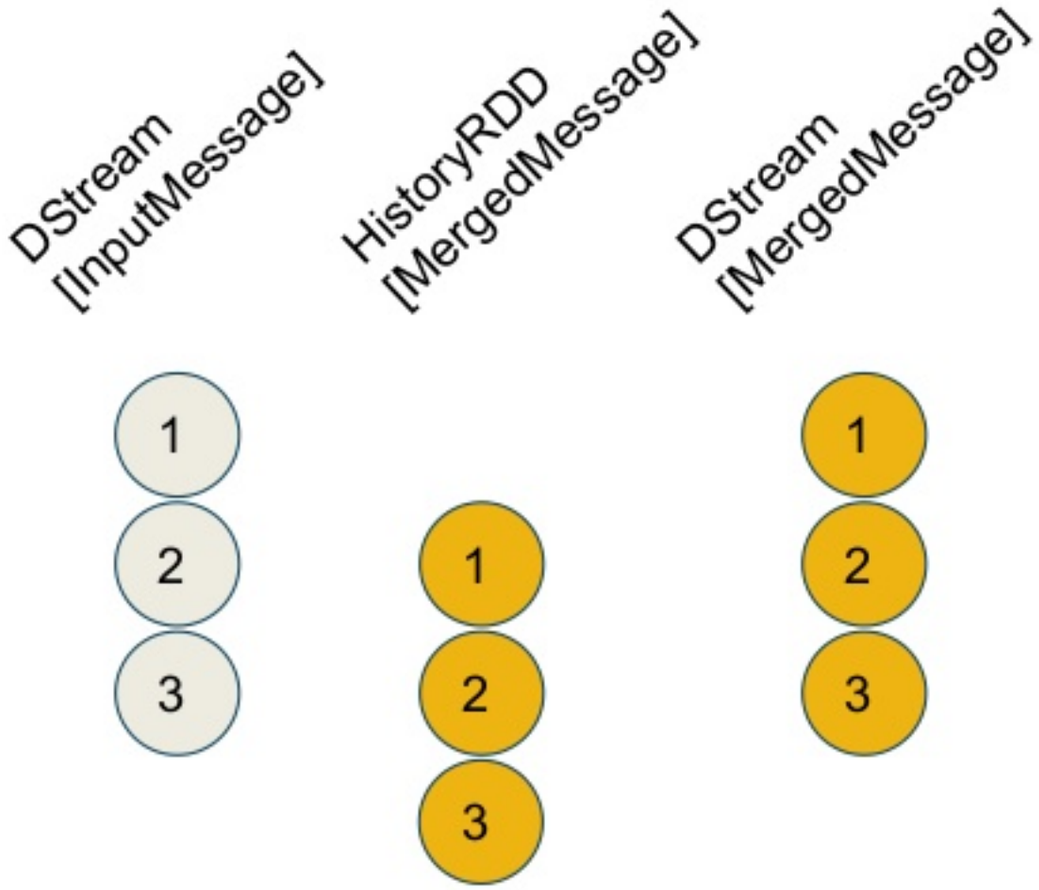

UpdateFunction:
(Seq[InputMessage], Option[MergedMessage]) =>
Option[MergedMessage]

OTTO

Merge messages with the same Id

```
val merge: (DStream[InputMessage]) => DStream[(String, MergedMessage)] =
  (input) => {
    input
      .map(msg => (msg.ssid, msg))
      .updateStateByKey(updateState(_, _))
  }
```

Merge messages with the same Id

```
@tailrec
def updateState(inputMessages: Seq[InputMessage],
                history: Option[MergedMessage]): Option[MergedMessage] = {

  def combine(mm: MergedMessage, im: InputMessage): MergedMessage = {...}

  (inputMessages, history) match {
    case (seq, _) if seq.isEmpty => // no input messages
      history
    case (seq, None) => // no history (state), new input message(s)
      updateState(seq.tail, Some(MergedMessage.fromInputMessage(seq.head)))
    case (seq, Some(h)) => // existing history (state), new input messages
      updateState(seq.tail, Some(combine(h, seq.head)))
  }
}
```

Flag And Remove Timed Out Msgs

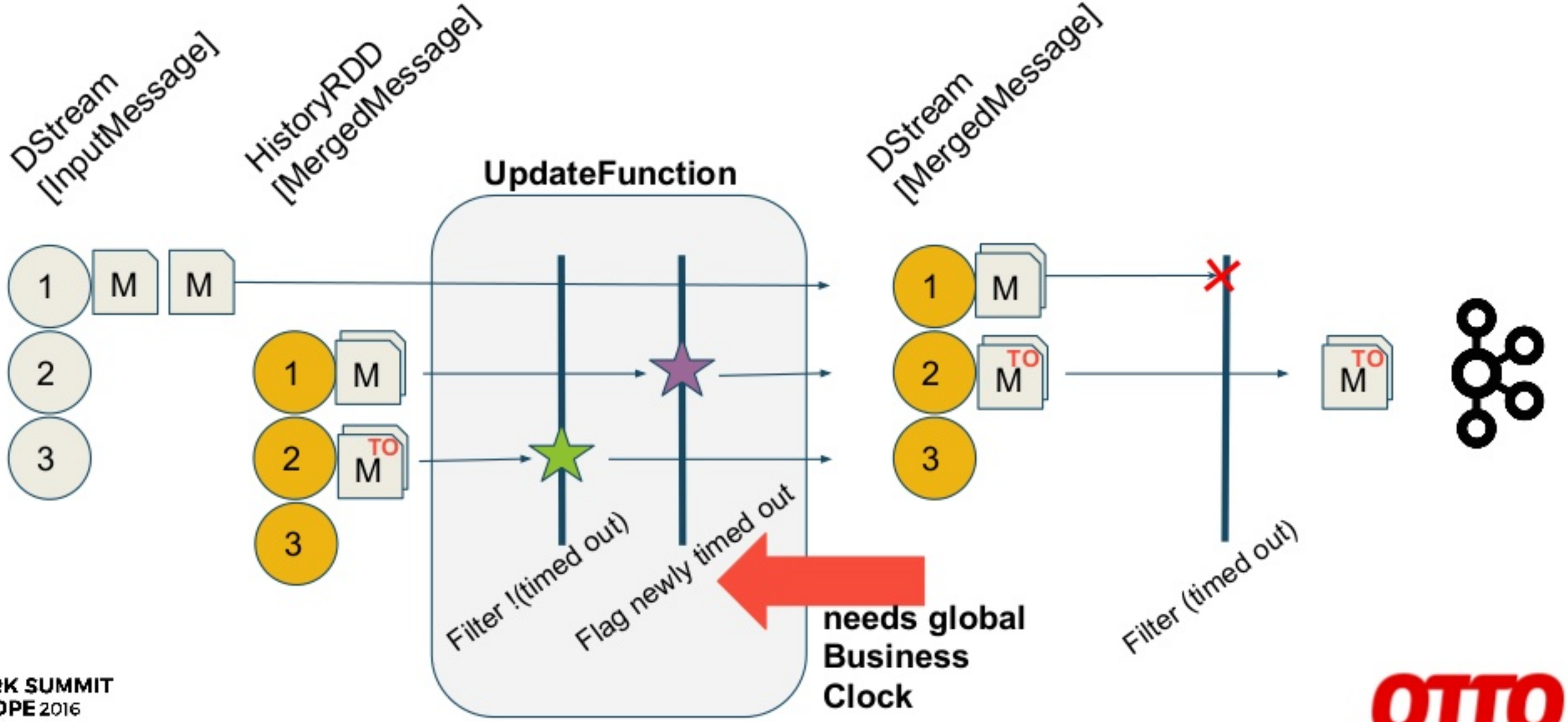

OTTO

Messages are timed out by event time

- We need access to all messages from the current micro batch and the history (state) => Custom StateDStream
- Compute the maximum event time of both topics and supply it to the updateStateByKey function

Messages are timed out by event time

```
val merge: (DStream[InputMessage]) => DStream[(String, MergedMessage)] =
  (input) => {
    input
      .map(msg => (msg.ssid, msg))
      .updateStateByKeyMerge(createUpdateStateFunction(_, _))
  }
```


OTTO

Messages are timed out by event time

```
def createUpdateStateFun(inputMsgs: Option[RDD[(String, InputMessage)]],
                         historyMsgs: Option[RDD[(String, MergedMessage)]]):
(Seq[InputMessage], Option[MergedMessage]) => Option[MergedMessage] = {

  val minBusinessClockPerPartition = calculateMbc(inputMsgs, historyMsgs)
  val minOffsetPerPartition = calculateMinOffset(inputMsgs, historyMsgs)

  updateState(minBusinessClockPerPartition, minOffsetPerPartition)
}
```

Messages are timed out by event time

```
def updateState(minBusinessClocks: Map[Int, Long],
                minSourceTopicOffsets: Map[Int, MinSourceTopicOffsets])
               (inputMsgs: Seq[InputMessage], history: Option[MergedMessage]):
Option[MergedMessage] = {

  def flagIfTimedOut(mergedMessage: MergedMessage): MergedMessage = {...}

  inputMsgs
    .filterNot(isHeartbeatMessage)
    .mergeWith(history)
    .filterNot(_.meta.timedOut)
    .map(flagIfTimedOut)
}
```

Messages are timed out by event time

```
def flagIfTimedOut(mergedMessage: MergedMessage): MergedMessage = {
  val isTimedOut = minBusinessClocks
    .get(mergedMessage.meta.partition)
    .exists(mbc => mergedMessage.timestamp < (mbc - TimeoutPeriod))

  if (isTimedOut) {
    mergedMessage.asTimedOut(minSourceTopicOffsets.
      get(mergedMessage.meta.partition))
  } else {
    mergedMessage
  }
}
```


OTTO

Advanced Requirements

SPARK SUMMIT
EUROPE 2016

Effect of different request rates in source topics

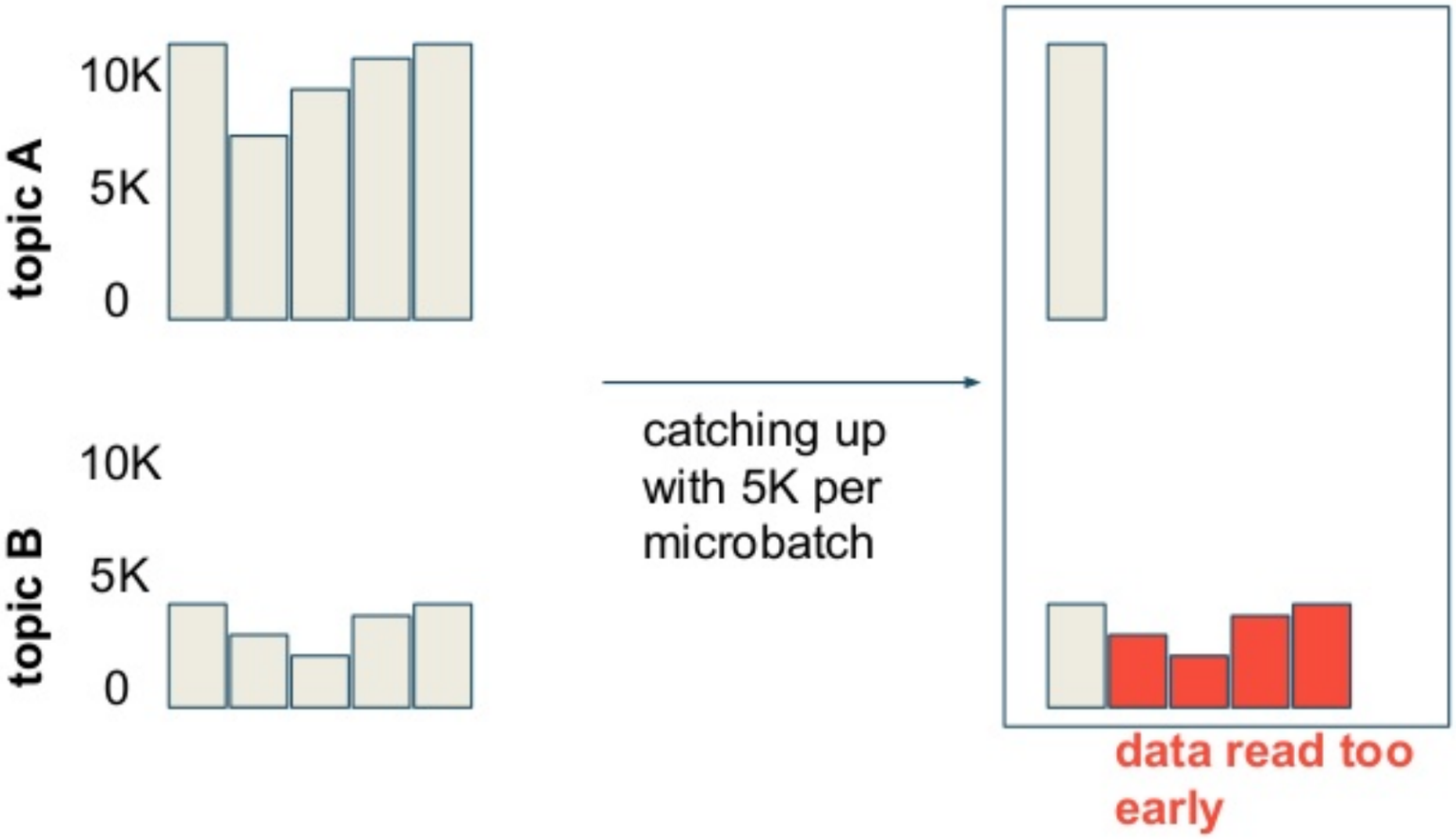

OTTO

Handle different request rates in topics

- Stop reading from one topic if the event time of other topic is too far behind
- Store latest event time of each topic and partition on driver
- Use custom KafkaDStream with clamp method which uses the event time

Handle different request rates in topics

```
private var latestTracking: Map[Int, Long] = Map.empty
private var latestOrder: Map[Int, Long] = Map.empty

def createStreams(ssc: StreamingContext,
                  cProps: Map[String, String],
                  pProps: Map[String, String],
                  readOffsets: Map[TopicAndPartition, Long]):
(DStream[InputMessage], DStream[InputMessage]) = {

  val trackingStream: DStream[InputMessage] = createStream(cProps, pProps,
    readOffsets.filter(_._1.topic == Settings.topic), ssc,
    (raw, p, o) => TrackingMessage(TrackingMessage.Meta(p, o), raw),
    partition => latestTracking.get(partition),
    partition => latestOrder.get(partition))
  val orderStream: DStream[InputMessage] = createStream(...)
```

Handle different request rates in topics

```
  val trackingStream: DStream[InputMessage] = createStream(...)
  val orderStream: DStream[InputMessage] = createStream(...)

  storeLatestTimestamp(trackingStream) { maxTimestamps =>
    latestTracking = latestTracking ++ maxTimestamps }
  storeLatestTimestamp(orderStream) { maxTimestamps =>
    latestOrder = latestOrder ++ maxTimestamps  }

  (trackingStream, orderStream)
}
```

Handle different request rates in topics

```
override def clamp(leaderOffsets: Map[TopicAndPartition, LeaderOffset]):
Map[TopicAndPartition, LeaderOffset] = {

  val ownTimestampValues = for {
    (tp@TopicAndPartition(_, partition), _) <- leaderOffsets
    ownTimestamp <- this.obtainOwnTimestamp(partition)
  } yield (tp, ownTimestamp)

  val otherTimestampValues = for {
    (tp@TopicAndPartition(_, partition), _) <- leaderOffsets
    otherTimestamp <- this.obtainOtherTimestamp(partition)
  } yield (tp, otherTimestamp)
```

Handle different request rates in topics

```
lazy val standardOffsets = super.clamp(leaderOffsets)
leaderOffsets.map { case (tP, leaderOffset) =>
  def stopReading = (tP, leaderOffset.copy(offset = currentOffsets(tP)))
  def continueReading = (tP, standardOffsets(tP))
  (ownTimestampValues.get(tP), otherTimestampValues.get(tP)) match {
    case (None, _) => // no values in this stream yet
      continueReading
    case (_, None) => // stop reading until other stream got values
      stopReading
    case (Some(ownValue), Some(oValue)) if ownValue - oValue > maxLead =>
      stopReading
    case (Some(ownValue), Some(oValue)) =>
      continueReading
  }
}
```

Guarantee at least once semantics

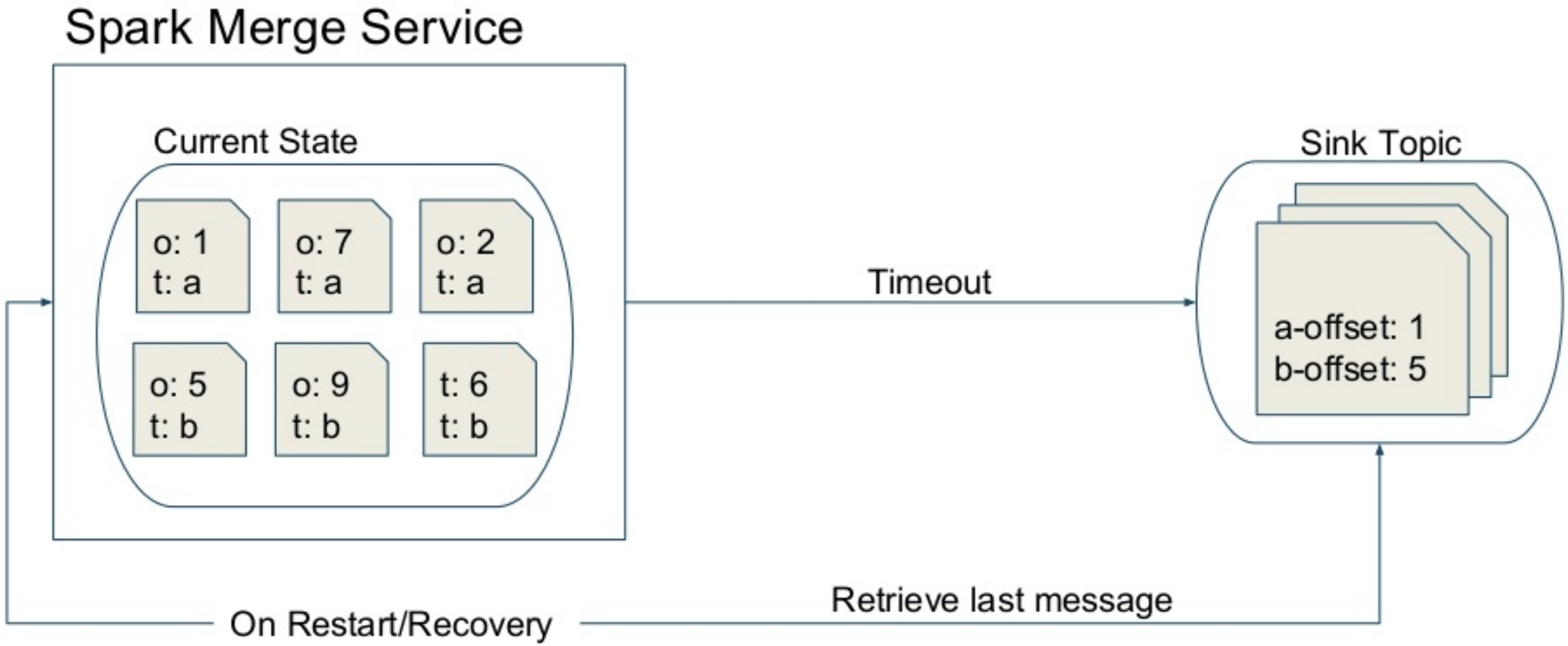

OTTO

Guarantee at least once semantics

```
def lookupOffsets(cProps: Map[String, String]):
Map[TopicAndPartition, Long] = {

  val sourceOffsetsFromSink =
    for {
      (partition, mergedMessage) <- retrieveLastMergedMessage(cProps)
      offsets <- mergedMessage.meta.minSourceTopicOffsets.toList
      (topic, offset) <- List(
        S.topic -> offsets.tracking,
        S.orderTopic -> offsets.order)
    } yield TopicAndPartition(topic, partition) -> offset

  val tPs = retrievePartitions(cProps, Set(S.topic, S.orderTopic))
  val earliestSourceOffsets = retrieveEarliestOffsets(cProps, tPs)
  val latestSourceOffsets = retrieveLatestOffsets(cProps, tPs)
```

Guarantee at least once semantics

```
tPs.map { topicAndPartition =>
  val offset: Long =
    (earliestSourceOffsets.get(topicAndPartition),
      sourceOffsetsFromSink.get(topicAndPartition),
      latestSourceOffsets.get(topicAndPartition)) match {
      case (Some(earliestOffset), Some(offsetFromSink), _)
        if earliestOffset <= offsetFromSink =>
        offsetFromSink
      case (Some(earliestOffset), Some(earliestFromSink), Some(latest)) =>
        earliestOffset //offset already gone in source
      case (_, _, Some(latest)) =>
        latest //min offset could not be retrieved
    }
  topicAndPartition -> offset
}.toMap
```


OTTO

Everything put together

```
def work(appInfo: AppInfo,
         ssc: StreamingContext,
         cProps: Map[String, String],
         pProps: Map[String, String],
         customReadOffsets: Option[Map[TopicAndPartition, Long]]): Unit = {

  val readOffsets = customReadOffsets.getOrElse(lookupOffsets(cProps))
  val (streamTracking, streamOrder) = createStreams(ssc, cProps, pProps, readOffsets)
  val state = Merger.merge(streamTracking.union(streamOrder))
  val timedOutMessages = state.filter { case (_, message) => message.meta.timedOut }
  val validTimedOutMessages = timedOutMessages.filter(isValid)
  validTimedOutMessages.foreachRDD(MessageSender.send(cProps, pProps))
```

Lessons learned

- Excellent Performance and Scalability
- Extensible via Custom RDDs and Extension to DirectKafka
- No event time windows in Spark Streaming
  See: https://github.com/apache/spark/pull/2633
- Checkpointing cannot be used when deploying new artifact versions
- Driver/executor model is powerful, but also complex

THANK YOU.

Twitter:
@sistar_hh
@Sebasti0n

Blog: dev.otto.de
Jobs: otto.de/jobs

SPARK SUMMIT
EUROPE 2016