Online Learning with Structured Streaming

Ram Sriharsha, Vlad Feinberg
@halfabrane

Spark Summit, Brussels
27 October 2016

databricks

What is online learning?

- Update model parameters on each data point
  - In batch setting get to see the entire dataset before update
- Cannot visit data points again
  - In batch setting, can iterate over data points as many times as we want!

An example: the perceptron

Goal: Find the best line separating positive
From negative examples on a plane

Update Rule: if (y != sign(w.x)), w -> w + y(w.x)

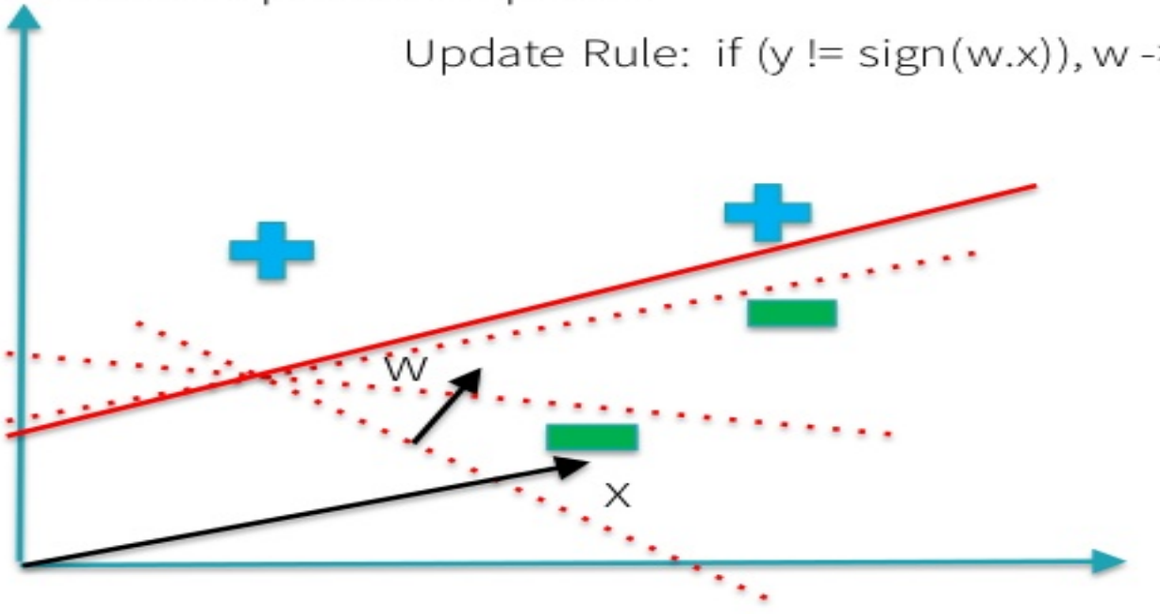

Why learn online?

- I want to adapt to changing patterns *quickly*
  - data distribution can change
    - e.g, distribution of features that affect learning might change over time
- I need to learn a good model *within resource + time* constraints (*large-scale learning)*
  - Time to a given accuracy might be faster for certain online algorithms

Online Classification Setting

- Pick a hypothesis
- For each labeled example ($\mathbf{x}$, y):
  - Predict label $\tilde{y}$ using hypothesis
  - Observe the loss $\mathcal{L}(y, \tilde{y})$ (and its gradient)
  - Learn from mistake and update hypothesis
- Goal: to make as few mistakes as possible in comparison to the *best* hypothesis in *hindsight*

An example: Online SGD

- Initialize weights $\mathbf{w}$
- Loss function $\mathcal{L}$ is known.
- For each labeled example ($\mathbf{x}$, y):
  - Perform update $\mathbf{w} \rightarrow \mathbf{w} - \eta \nabla \mathcal{L}(y, \mathbf{w}.\mathbf{x})$
- For each new example x:
  - Predict $\tilde{y} = \sigma(\mathbf{w}.\mathbf{x})$ (σ is called link function)

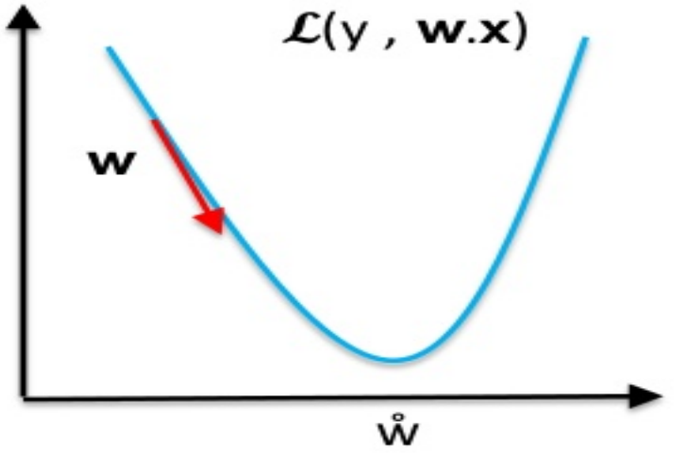

Distributed Online Learning

- *Synchronous*
  - On each worker:
    - Load training data, compute gradients and update model, push model to driver
  - On some node:
    - Perform model merge
- Asynchronous
  - On each worker:
    - Load training data, compute gradients and push to server
  - On each server:
    - Aggregate the gradients, perform update step

Challenges

- Not all algorithms admit ***efficient*** online versions
- Lack of infrastructure
  - (Single machine) Vowpal Wabbit works great but hard to use from Scala, Java and other languages.
  - (Distributed) No implementation that is ***fault tolerant***, ***scalable***, ***robust***
- Lack of framework in open source to provide extensible algorithms
  - Adagrad, normalized learning, L1 regularization,. . .
  - Online SGD, FTRL, ...

Structured Streaming

databricks

Structured Streaming

1. One single API **`DataFrame`** for everything
   - Same API for machine learning, batch processing, graphX
   - Dataset is a typed version of DataFrame for Scala and Java

2. End-to-end exactly-once guarantees
   - The guarantees extend into the sources/sinks, e.g. MySQL, S3

3. Understands external event-time
   - Handling late arriving data
   - Support sessionization based on event-time

How does it work?

at any time, the output of the application is equivalent to executing a batch job on a prefix of the data

The Model

Input: data from source as an append-only table

Trigger: how frequently to check input for new data

Query: operations on input
usual map/filter/reduce
new window, session ops

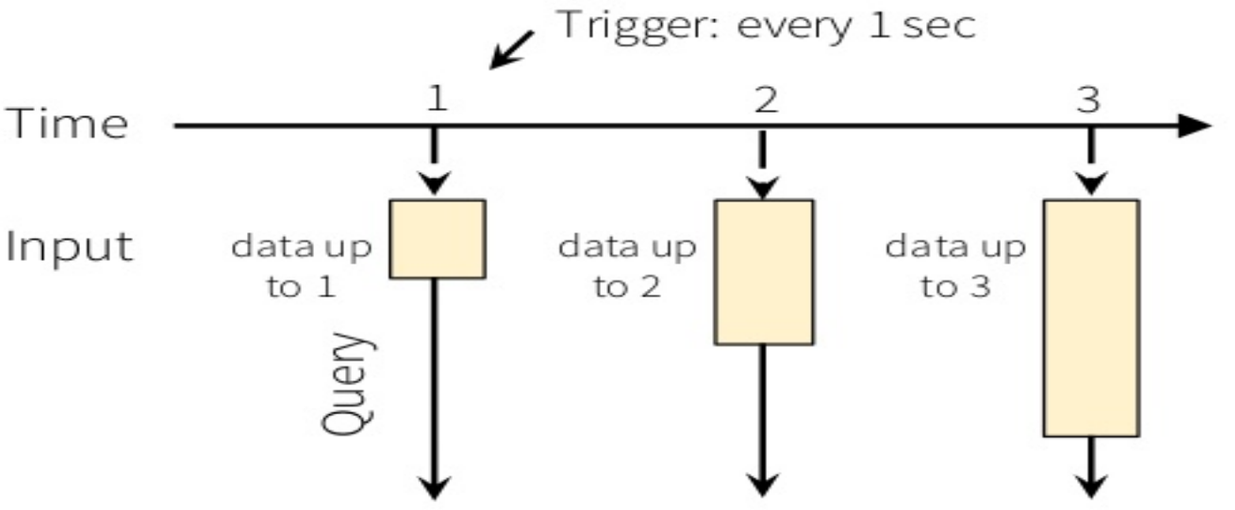

The Model

Result: final operated table updated every trigger interval

Output: what part of result to write to data sink after every trigger

Complete output: Write full result table every time

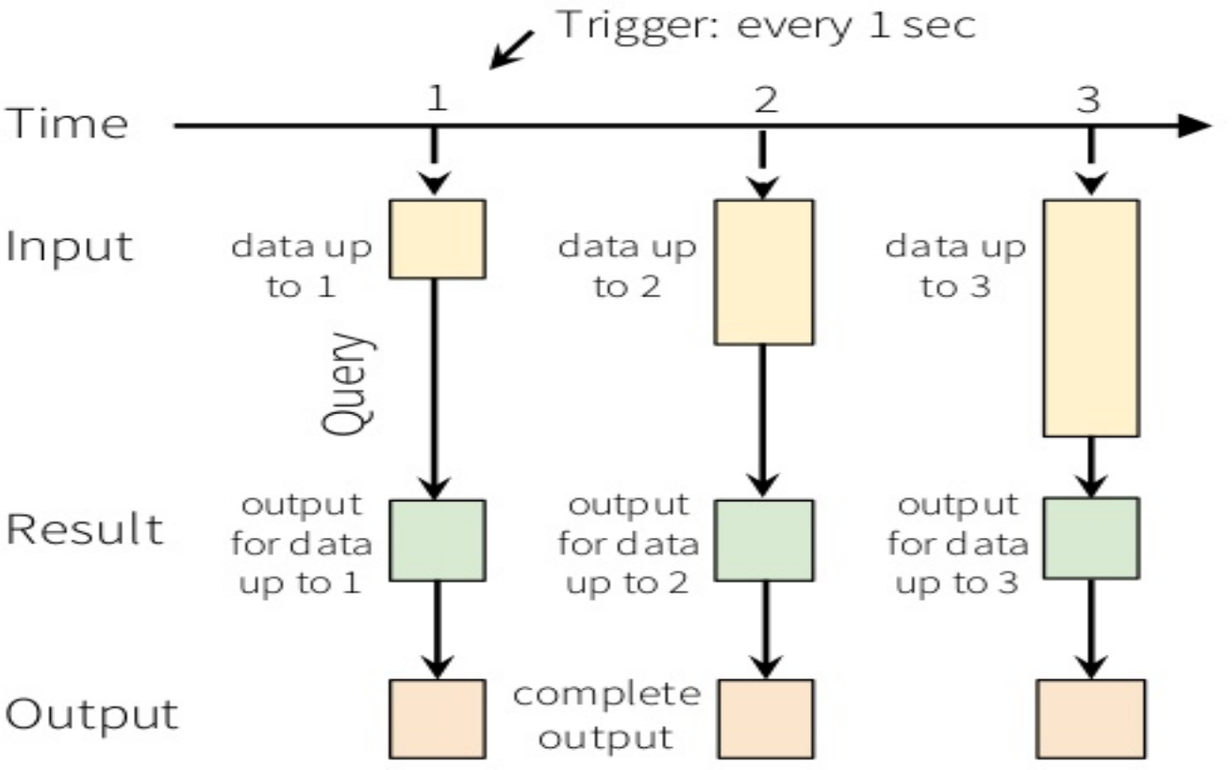

The Model

Result: final operated table updated every trigger interval

Output: what part of result to write to data sink after every trigger

Complete output: Write full result table every time
Delta output: Write only the rows that changed in result from previous batch
Append output: Write only new rows

*Not all output modes are feasible with all queries

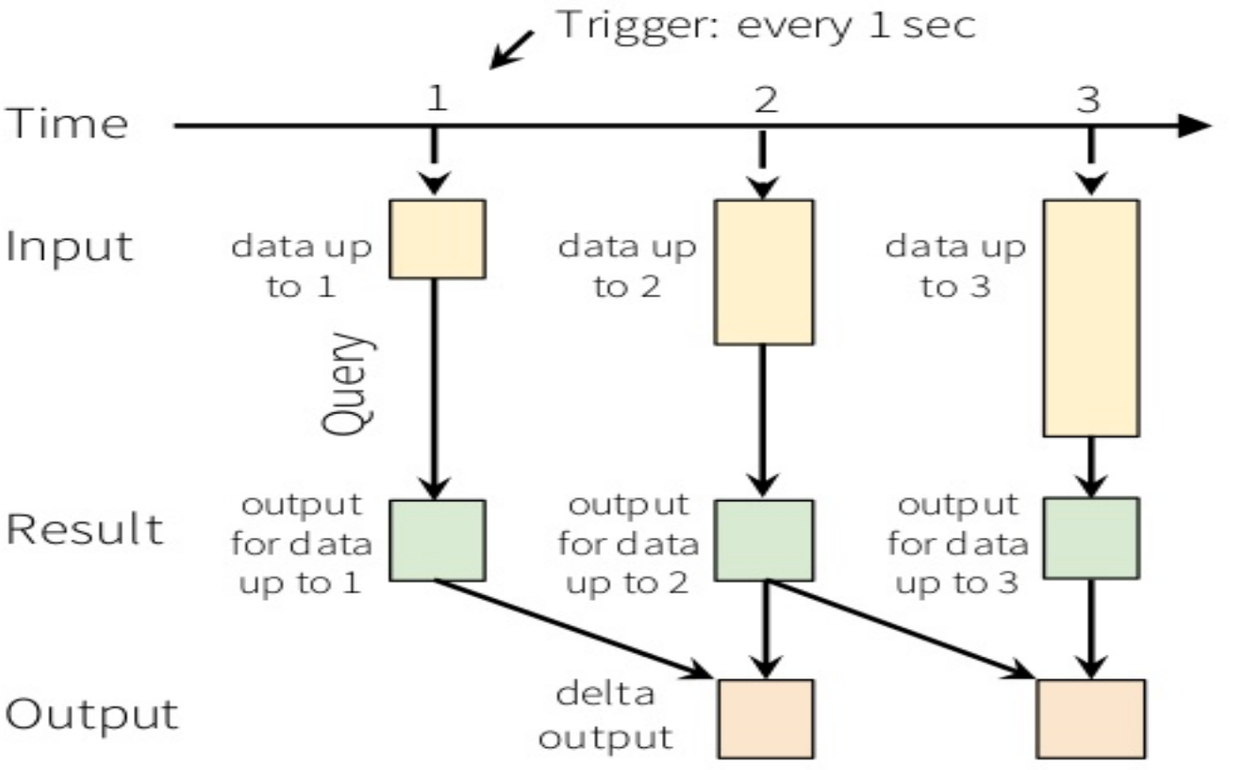

databricks

Streaming ML on Structured Streaming

databricks

Streaming ML on Structured Streaming

Input: append only table containing labeled examples

Query: Stateful aggregation query: picks up the last trained model, performs a distributed update + merge

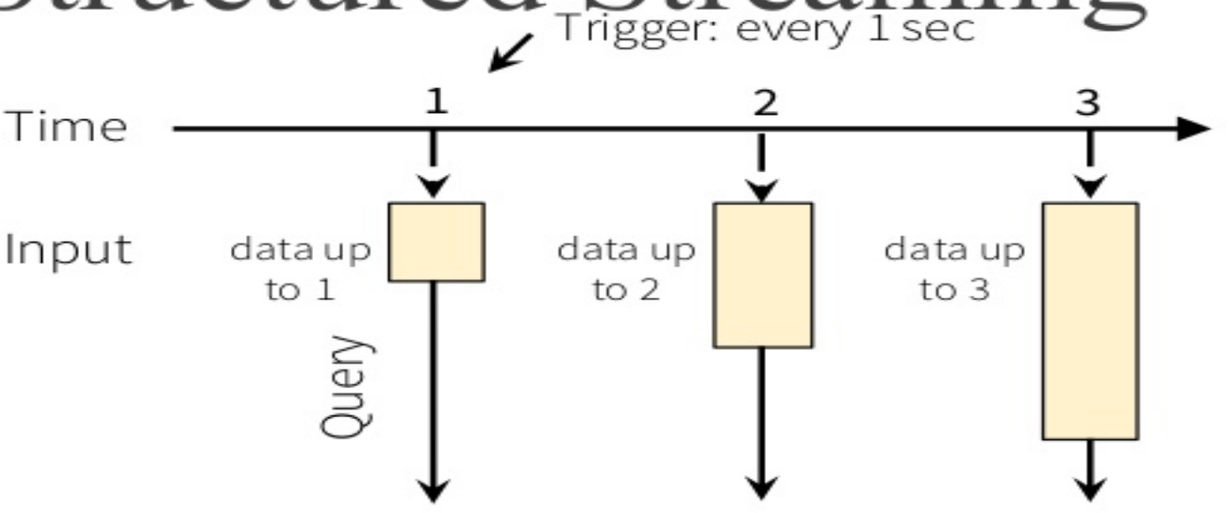

Streaming ML on Structured Streaming

Result: table of model parameters updated every trigger interval

Complete mode: table has one row, constantly being updated

Append mode (in the works): table has timestamp-keyed model, one row per trigger

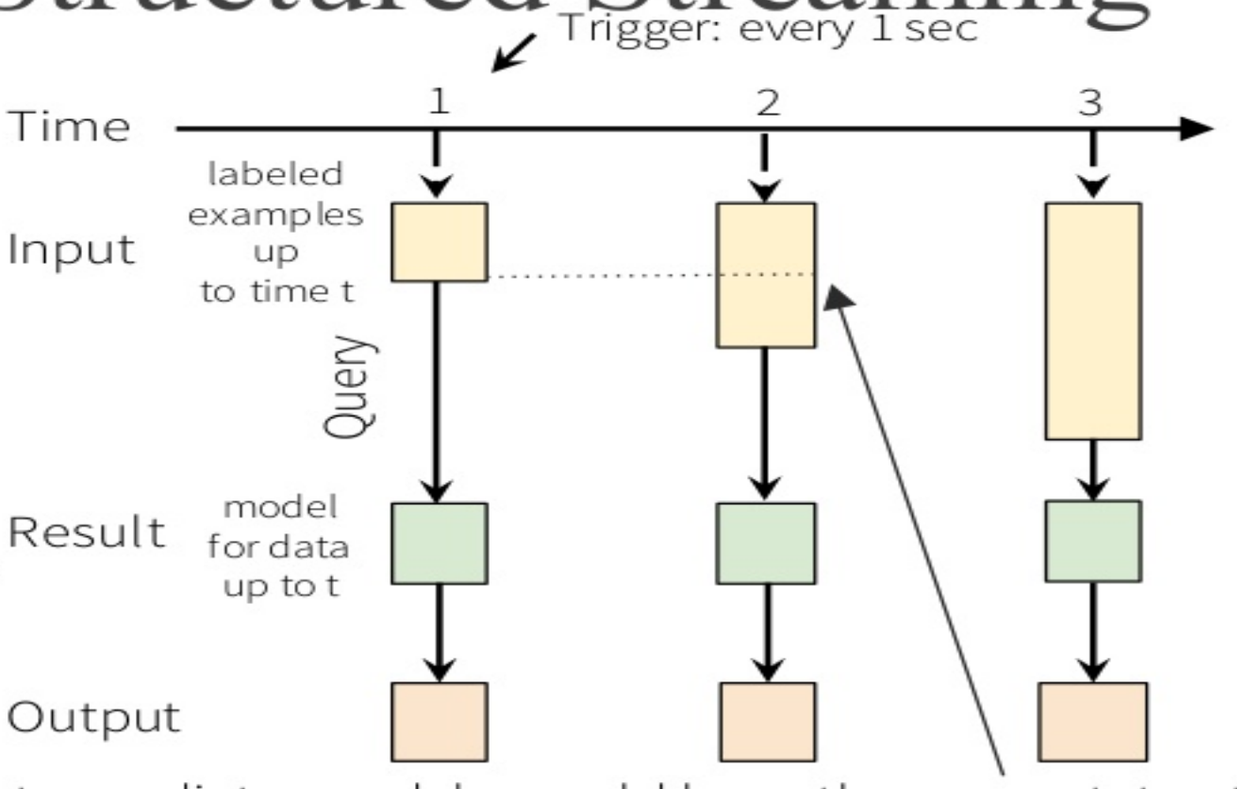

intermediate models would have the same state at this point of computation for the (abstract) queries #1 and #2

Why is this hard?

- Need to update model, i.e
  - Update(previousModel, newDataPoint) = newModel
- Typical aggregation is associative, commutative
  - e.g. sum(P1: sum(sum(0, data[0]), data[1]), P2: sum(sum(0, data[2]), data[3]))
- General model update violates associativity + commutativity!

Solution: Make Assumptions

- Result may be partition-dependent, but we don't care as long as we get some valid result.

```
average-models(
  P1: update(update(previous  model, data[0]), data[1]),
  P2: update(update(previous  model, data[2]), data[3]))
```

- Only partition-dependent if update and average don't commute - can still be deterministic otherwise!

Stateful Aggregator

- Within each partition
  - Initialize with previous state (instead of zero in regular aggregator)
  - For each item, update state
- Perform reduce step
- Output final state

Very general abstraction: works for sketches, online statistics (quantiles), online clustering . . .

How does it work?

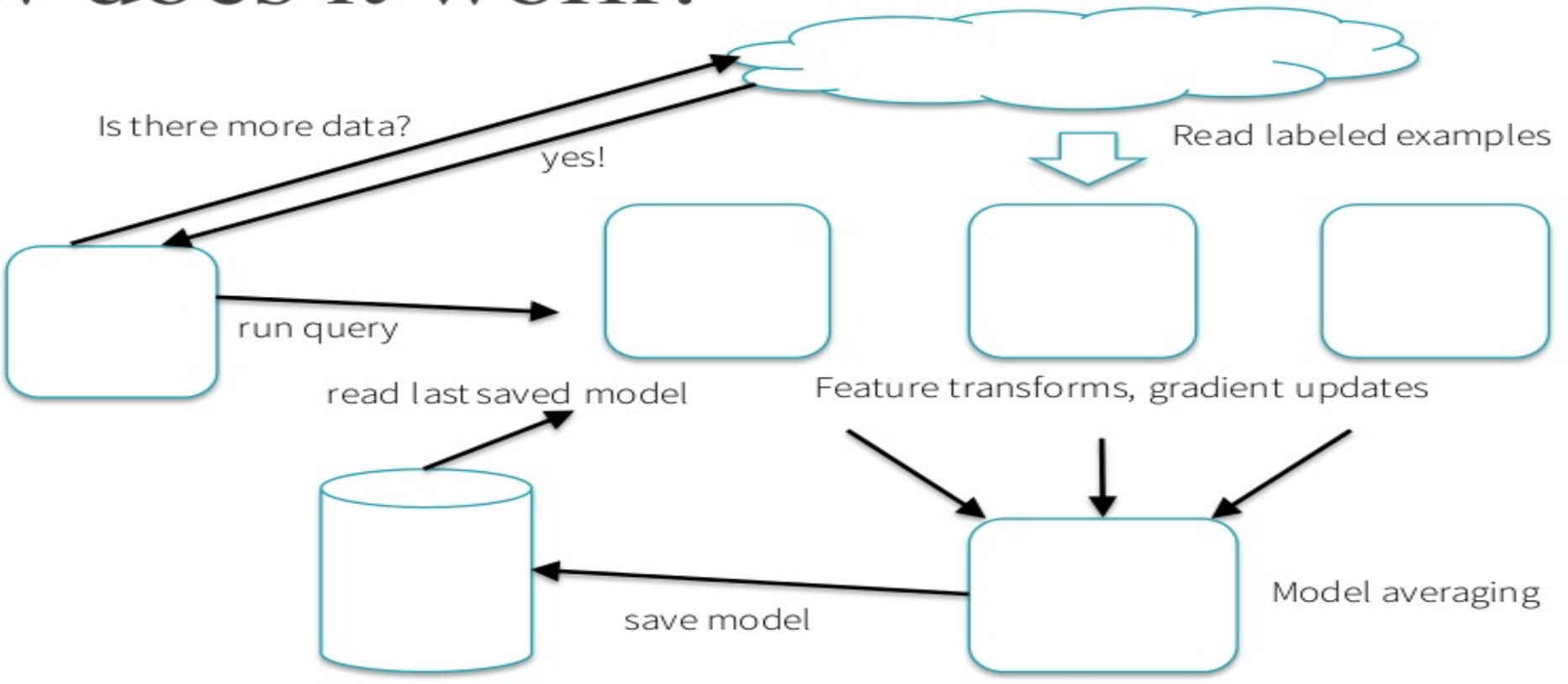

databricks

APIs

Spark Summit Brussels
27 October 2016

databricks

ML Estimator on Streams

- Interoperable with ML pipelines

Input: stream of labelled data
Output: stream of models, updated over time.

Batch Interoperability

- Seamless application on batch datasets

```
model = estimator.fit(batchDF)
```

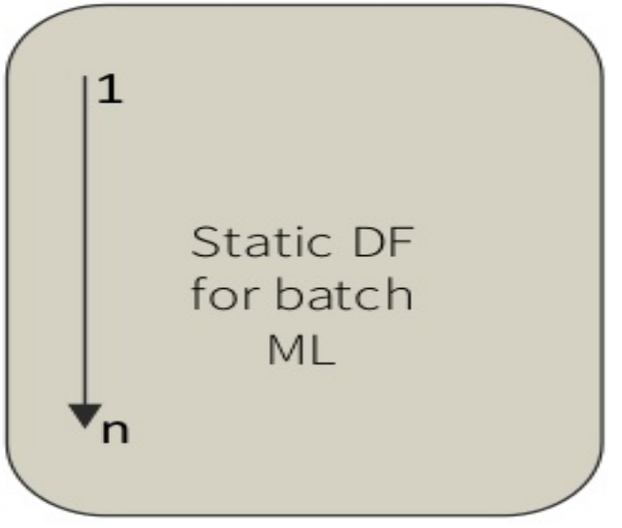

Feature Creation

- Handle new features as they appear (ex., IPs in fraud detection)
  - Provide transformers, such as the HashingEncoder, that apply the hashing trick.
  - Encode arbitrary (possibly categorical data) without knowing cardinality ahead of time by using a high-dimensional sparse mapping.

API Goals

- Provide modern, regret-minimization-based online algorithms.
  - Online Logistic Regression
  - Adagrad
  - Online gradient descent
  - L2 regularization
- Input streams of any kind accepted.
- Streaming aware feature engineering

What's next?

Spark Summit Brussels
27 October 2016

databricks

What's next?

- More bells and whistles
  - Adaptive normalization
  - L1 regularization
- More algorithms
  - Online quantile estimation?
  - More general Sketches?
  - Online clustering?
- Scale testing and benchmarking

Demo

Spark Summit Brussels
27 October 2016

databricks™