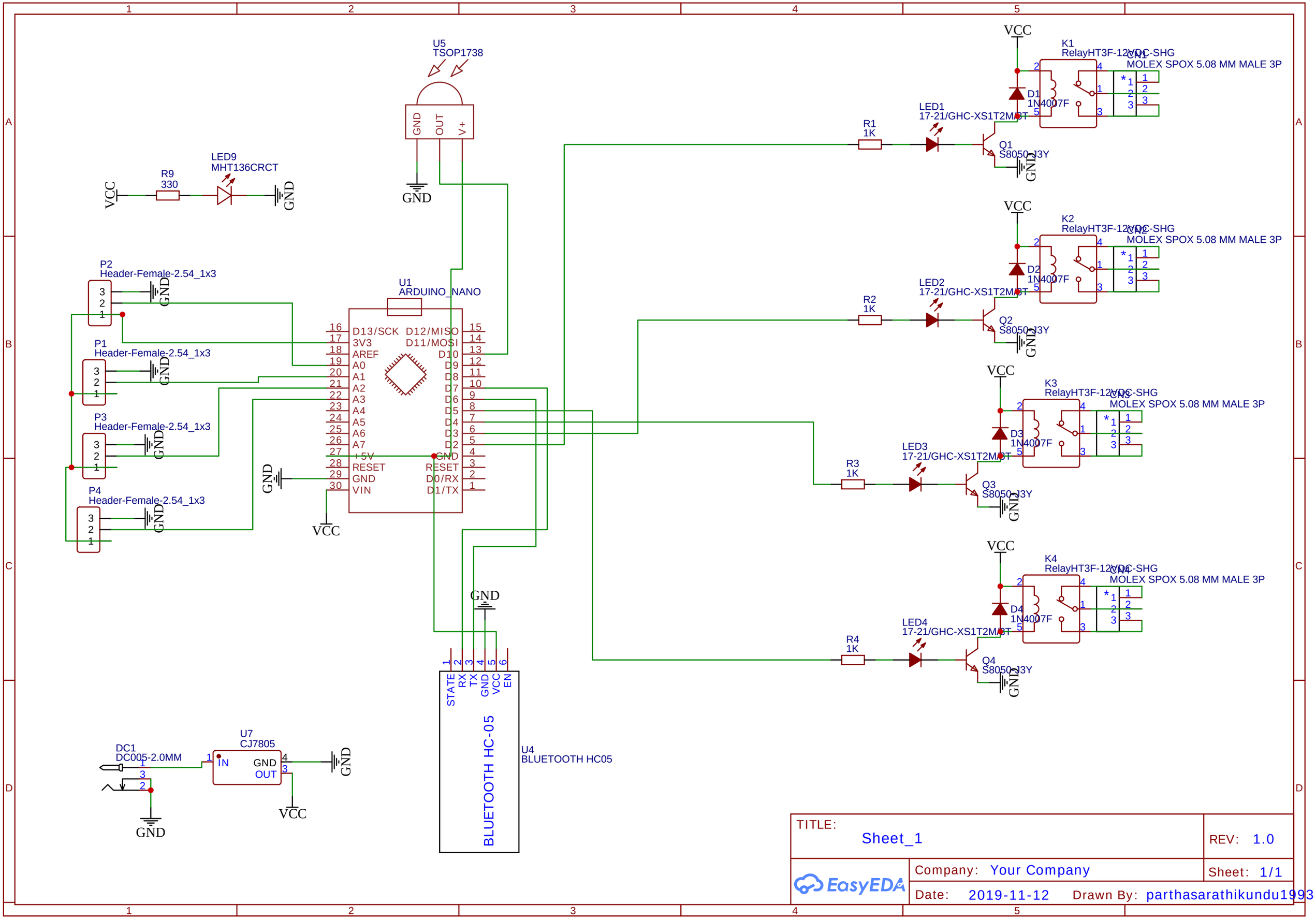
U5
TSOP1738
GND
OUT
V+
GND
LED9
MHT136CRCT
R9
330
VCC
GND
P2
Header-Female-2.54_1x3
P1
Header-Female-2.54_1x3
P3
Header-Female-2.54_1x3
P4
Header-Female-2.54_1x3
U1
ARDUINO_NANO
D13/SCK
3V3
AREF
A0
A1
A2
A3
A4
A5
A6
A7
+5V
RESET
GND
VIN
D12/MISO
D11/MOSI
D10
D9
D8
D7
D6
D5
D4
D3
D2
GND
RESET
D0/RX
D1/TX
VCC
GND
STATE
RX
TX
GND
VCC
EN
BLUETOOTH HC-05
U4
BLUETOOTH HC05
DC1
DC005-2.0MM
U7
CJ7805
IN
GND
OUT
VCC
GND
K1
RelayHT3F-12VDC-SHG
CN1
MOLEX SPOX 5.08 MM MALE 3P
D1
1N4007F
LED1
17-21/GHC-XS1T2M/BT
R1
1K
Q1
S8050-J3Y
K2
RelayHT3F-12VDC-SHG
CN2
MOLEX SPOX 5.08 MM MALE 3P
D2
1N4007F
LED2
17-21/GHC-XS1T2M/BT
R2
1K
Q2
S8050-J3Y
K3
RelayHT3F-12VDC-SHG
CN3
MOLEX SPOX 5.08 MM MALE 3P
D3
1N4007F
LED3
17-21/GHC-XS1T2M/BT
R3
1K
Q3
S8050-J3Y
K4
RelayHT3F-12VDC-SHG
CN4
MOLEX SPOX 5.08 MM MALE 3P
D4
1N4007F
LED4
17-21/GHC-XS1T2M/BT
R4
1K
Q4
S8050-J3Y
TITLE:
Sheet_1
REV: 1.0
Company: Your Company
Sheet: 1/1
Date: 2019-11-12
Drawn By: parthasarathikundu1993
EasyEDA