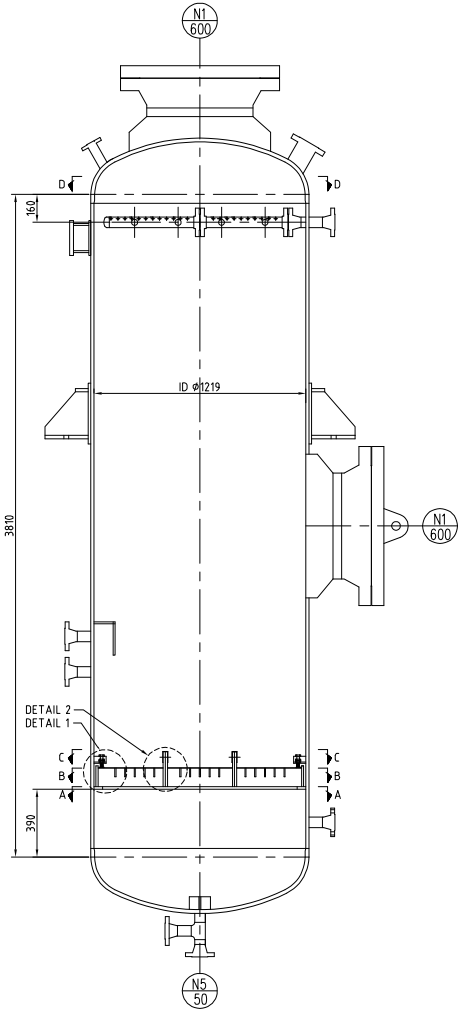

ELEVATION VIEW
SCALE 1 : 20

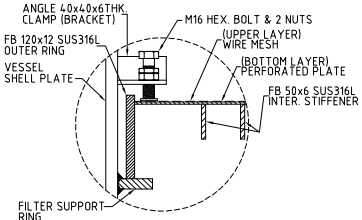

DETAIL 1
SCALE 1 : 5

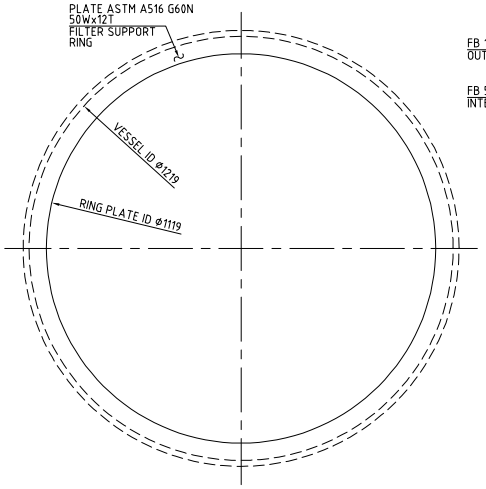

SECTION A-A
SCALE 1 : 10

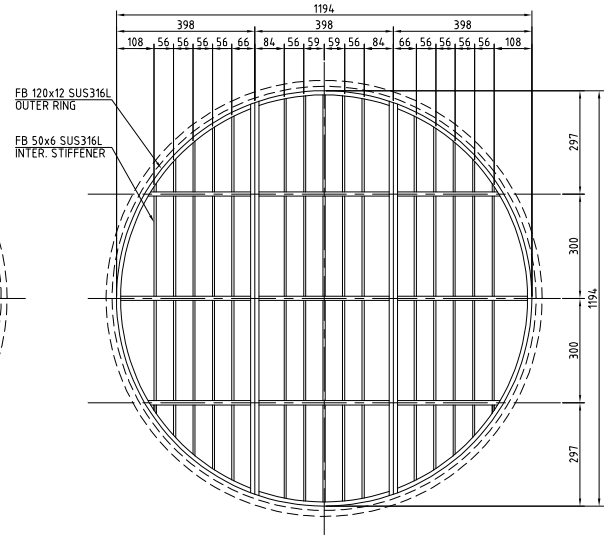

SECTION B-B
SCALE 1 : 10

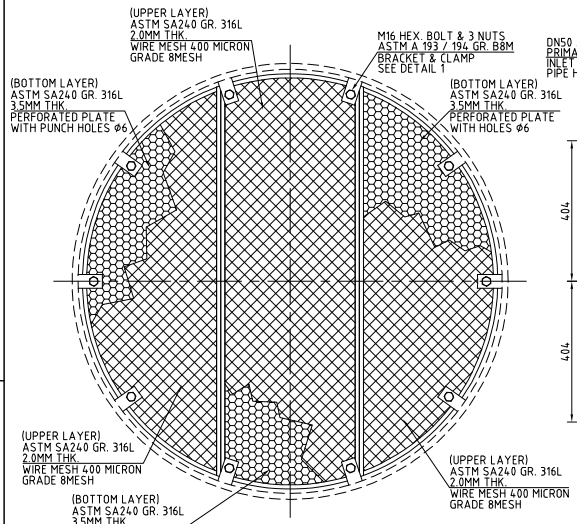

SECTION C-C
SCALE 1 : 10

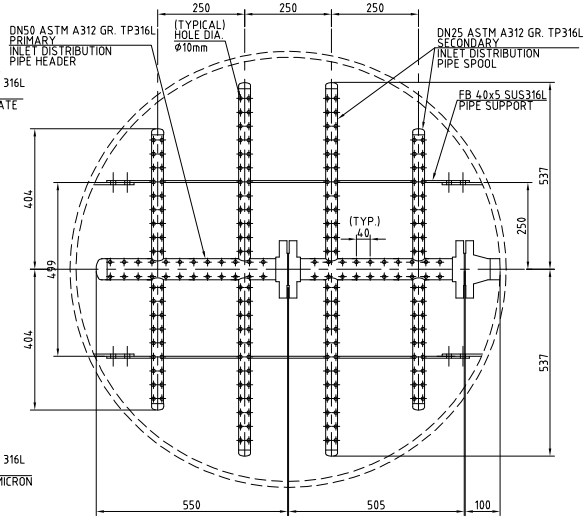

SECTION D-D
SCALE 1 : 10

BILL OF MATERIAL

ITEM	PART NAME	MATERIAL SPEC.	Q'TY	MATERIAL DESCRIPTION

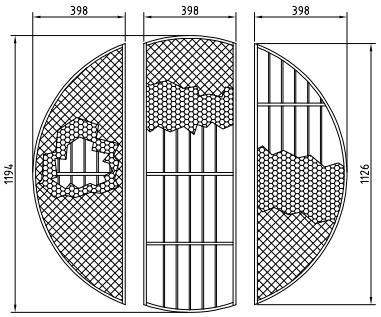

LAYERING OF FILTER
SCALE 1 : 15

BOTTOM = GRATING
INTERMEDIATE = PERFORATED PLATE
UPPER = WIRE MESH

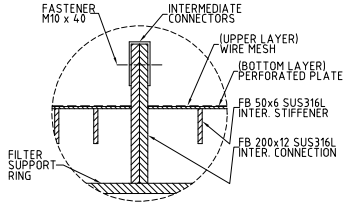

DETAIL 2
SCALE 1 : 5