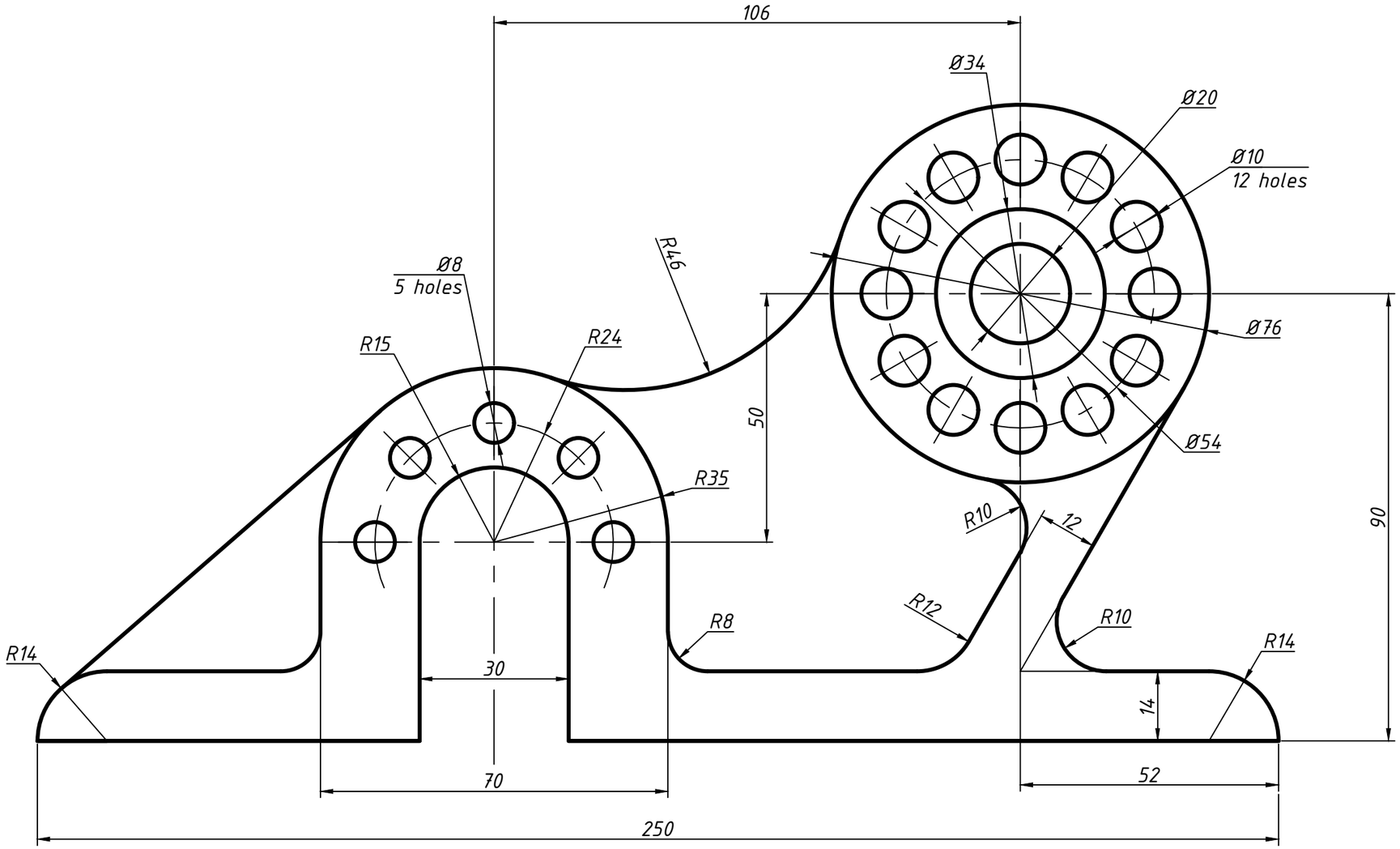

Change	Sheet	Number of doc.	Sign	Date	PRACTICE 3 Variant #6 FRAME	Letter	Mass	Scale
Designed by		Fazkullin F.						1:1
Checked by		Butakova D.A.				Sheet 1	Sheets 2	
N.control		Butakova D.A.				KBTU SITE Automation and Control		
Confirmed		Butakova D.A.						

A3 Format (420 X 297mm. / 16.5 X 11.7")