KAZAKH-BRITISH TECHNICAL UNIVERSITY

Kazakh-British Technical University
School of Information Technology and Engineering

PLC Programming I

DEVELOPMENT OF AN AUTOMATED CONTROL SYSTEM FOR BOTTLED WATER PRODUCTION AND ROBOTIC PALLETIZING USING PLC AND INDUSTRIAL MANIPULATOR

Course project

Prepared by: Fazkullin F., Salkimbayev A.

Checked by: PhD, prof. SITE (docent) Samigulina Z.I.

Almaty, 2025

CONTENT

Introduction..... 3
1. Description of the technological process..... 4
2. Technological process of bottled water production..... 5
2.1 Descriptions of the production process of bottled water..... 5
2.2 Building of block diagram of the production process..... 7
3. Description of the Selected Robotic Manipulator..... 11
3.1 Description of General Characteristics (Yaskawa Motoman MH50-35) 11
3.2 Motion Type and Axis Characteristics..... 13
3.3 Overall Dimensions..... 14
3.4 Robot Load and Selection of End-Use Tool (Grip)..... 15
3.5 Load Diagrams..... 17
3.6 Work Area..... 18
3.7 Accuracy and Calibration..... 19
3.8 Programming Software..... 20
3.9 Advantages and Disadvantages of Robot Implementation..... 20
4. Description of the process of bottled water production..... 22
5. Robot Description..... 24
6. Program Description..... 25
6.1 PLC Configuration..... 27
6.2 Table of variables..... 29
6.3 Algorithm description..... 32
6.4 Mnemonic scheme..... 33
6.5 Human Machine Interface (HMI) 34
Conclusion..... 37
Appendix A..... 38
Appendix B..... 39
References..... 40

INTRODUCTION

In modern days, the bottled drinking water production process is one of the most rapidly developing sectors in the food industry production. Dynamically growing demand for high-quality and safe products shows that stringent requirements exist not only for the chemical composition part of the water but also for the efficiency of speed of production lines. This paper provides with a deep analysis of the bottled water production process, that covers all stages of that: from the initial intake of raw water to the warehousing of the finished product. Here, key purification stages, like complex multi-stage filtration process, reverse osmosis process, and even ozonation process, which ensure production with strict sanitary standards, are shown.

By the way, even the most advanced filtration system does not guarantee business success if the final stage, which is packaging and palletizing, remains a complex stage of the whole bottled water production. Traditionally, manual labor during the palletizing of heavy packages (weighing up to 20 kg) is associated with injury risks, instability, and the inability to maintain a high work pace 24/7. The key task of this course project is to automate the final stage of the production line process, which is the palletizing process.

Also, one of the primary goals of the project is to design a robotic cell, which is capable of complex movement during the replacement of the manual labor process in the loading area. To achieve this result, the market of the modern industrial manipulators was fully analyzed and a model ideally suited to product weight and size requirements were chosen. The project also shows the integration of the selected Yaskawa Motoman MH50-35 robot into the overall control system.

Furthermore, an important part of the project shows developing software for the Schneider Electric TM241CEC24U programmable logic controller (PLC). Here, not only was the hardware selected, but also control algorithms in FBD were created, developing a mimic diagram for the human-machine interface (HMI), and provide full synchronization of conveyors, sensors, and the robot during the whole production line. Thus, this project represents a comprehensive automation solution, combining mechanics, electronics, and programming to create a highly efficient production system.

Combining mechanics, electronics, and programming to create a highly efficient production system. In addition to the core control logic, significant attention is paid to the selection of peripheral equipment and safety protocols. The project examines in detail the integration of the OnRobot VGP30 vacuum gripper, chosen for its robust handling of cardboard boxes, preventing damage to packaging. To validate the proposed solution before physical implementation, the study utilizes simulation principles to optimize the robot's trajectory and cycle time, thereby ensuring the system meets the required throughput of a high-speed bottling line.

1. Description of the technological process

Bottled drinking water today is a really necessary product in society, whose production is strictly controlled and defined by it's purity, safety, and chemical consistency. And the final product is not just simple water, it is a controlled beverage, whose quality and stability are provided by using special production digital sensors and multiple lab tests. The quality of the bottled water can be determined by some key parameters, which are permanently controlled during the whole process of production:

Firstly, it is Total Dissolved Solids (TDS): They can be minerals, salt, and even metals that are dissolved in the water. To consider water as "Clean", it should have a level of TDS really low, something like 10 parts per million (ppm). Mineral water is valued more for its high level of TDS (250 ppm <= TDS <= 1000 ppm). This kind of water has a large amount of different minerals (calcium, potassium, magnesium, and so on), which makes it really valuable. Another important level is the pH level: It indicates the water's acidity or alkalinity level. Usually, bottled water should be neutral or low alkalinity with a pH level in the range of 6.5 to 7.5. But sometimes high-level alkali water can be produced with a pH in the range of 8.0 to 9.5. So then digital sensors can sense pH level in real time to guarantee it's level in a strictly determined range.

The third important parameter is microbiological purity: water has to be fully cleared of any dangerous bacteria, such as coliforms. Automated systems check them, and any detection leads to an instant production stop. The standard for production is 0 colony-forming units (CFU) for each 100 ml of water. Turbidity is another important parameter: Water should be clean enough to fit in a 0.1 Nephelometric Turbidity Units (NTU) level.

Today, factories of bottled water production use special digital data for efficiency. A typical production line can provide a level of production of 30 to 60 thousands bottles per hour. Sensors can detect the level of filling with an accuracy of ± 1.5 ml, which prevents large production losses. Capping machines apply a determined torque for closing bottles (1.2 to 1.8 Newtons meter) to ensure the bottle is sealed enough. All of this data is analyzed by the central PLC, which allows for monitoring and control of the whole process of bottled water production. As an addition to monitoring systems and sensors, water production technologies themselves can be assumed as a really important step in achieving the parameters described above. To provide low total dissolved solids (TDS) and remove all the smallest impurities at the molecular level, most modern factories today use reverse osmosis systems. This allows the water's composition to be "zeroed" before the engineers can add a precisely measured set of beneficial minerals for taste and nutrition.

At the final step, the laser marker system marks the date and time to the second on the bottle cap or shoulder. This ensures and provides complete traceability. The central PLC at the plant can access the data archive at any time and check the exact pH or pressure values.

2. Technological process of bottled water production

Production of bottled water can include a sequence of strictly controlled stages, which ensure the quality of production: Water intake and initial checking of water quality; multiple stages of water cleaning; preparation of bottles for filling, which includes cleaning and sterilization; filling water with clear water; capping and hermitization; making labels for each bottle and fate coding; packing of bottles in boxes; palletizing these boxes for storage or transportation; storage of finished product.

The technological process of bottled water production is an automated sequence of actions. Here we can see that there are multiple different operations, which include complex tasks such as purification of water, preparing bottles, filling them with clear water, and then storing the prepared product.

2.1 Descriptions of the production process of bottled water

First step is water intake and its pre-treatment: The Process starts from taking water, which can be taken from a municipal waterline, natural spring, or well. After arrival, water is pumped into large tanks for initial water collection. Their volume can reach 50000 to 200000 liters. Before intake, an initial quality test is performed. Automated sensors and lab samples measure key parameters of water: turbidity (clean), pH level (6.8-8.2), and general level of TDS. Then water goes through a multi-layered filtration system: First layer is gravel, sand, and anthracite for cleaning water from large fractions whose size is larger than 20 microns. After this, the water goes through a filtration system with activated carbons for absorption of organic elements, chlorine, and all undesirable smells and tastes, which provides a neutral sensorics profile for the next purification processes.

Next step is deep cleaning: During this process, water is going to be purified from almost all contaminants. Firstly, initially cleaned water from the previous process goes through micron-sized cartridge filtering systems, which delete small particles sized up to 5 microns. Then water goes into the system of Reverse Osmosis (RO). High-pressure pumps, which work with 15 to 17 bar, press water through semi-permeable membranes. They have microscopic holes with a size of 0.0001 micron, which pass molecules of water, but block all salts, heavy metals, and microorganisms. Typically, the system of osmosis has an efficiency of 75-80%, which means that in each 1000 liters of water, 750-800 liters are totally purified, and the other 200-250 liters are concentrated, which contains all filtered materials. This process significantly purifies water and clears it of TDS levels to less than 10 ppm.

After the Reverse Osmosis process, water goes through a two-step sterilization. Firstly, it goes through the Ultraviolet sterilization process. In this tank, ultraviolet type C with a length of 254 nanometers is applied to water. This light penetrates all the rest of the bacteria and virus cells and destroys their DNA, which makes them impossible to reproduce. This exposure is strictly controlled, and its minimal dose is 40 mJ/cm^2. It guarantees effective disinfection. In the last stage of purification,

water is infused with ozone (O3). It is a powerful oxidizing agent. This process is named ozonation and gives the remaining disinfectant effect, which saves water in bottles and prevents microorganisms from reproducing in them. Typically, the concentration of ozone is 0.2 to 0.4 ppm.

The third step is preparing, filling, and capping bottles. Parallel with this process, packages are prepared. Here, PET(polyethylene terephthalate) preforms are used for creating bottles. They are small preforms that are heated to 105-115°C in a special molding machine and then quickly expanded using high-pressure air up to 40 bars. As a result, light plastic bottles are produced.

Then, formed plastic bottles are conveyed to a rotary rinsing machine, which turns them upside down and sprays ozone water in them, removing all dust and microscopic particles. After that, the bottles are conveyed to another rotary rinsing machine, where the bottles are filled with water. This machine is very fast and can have from 20 to 100 filling nozzles and can fill 20000 to 80000 bottles per hour. Filling is controlled by special sensors, which control filling volumes of each bottle with an accuracy of +-1.5 ml.

Right after filling, the bottles are conveyed to the packaging machine. The sorting machine then sets caps correctly on each bottle. Then the capper machine sets the cap, tightening it with a precise torque value (1.2 to 1.8 Newtons meter). This process is critically important because it can affect the hermitization of bottles. The fourth step is labeling, packaging, and palletization processes. Inspector uses sensors for checking the level of fullness and pressure of each bottle. Then each bottle is checked by pressing on it to detect leaks. After all of these processes, each bottle is labeled using special adhesives or the shrink-sleeve process. Then the laser coder prints the batch, manufacturing date, expiration date, and additional information. The finished product is conveyed to the place of secondary packaging. Here, special machines package them by 6, 12, or 24 bottles using cardboard cases. Then, completed cases are transported by an industrial robot arm, which is capable of lifting up to 20 kg. This arm takes cases from the conveyor and stacks them on pallets according to a specially programmed scheme. Each pallet can contain more than 1500 bottles. They automatically moved to the wrapping station, where they are being wrapped in stretch film. They are transported to the warehouse, where they are stored in a cool and dry environment (15–22 °C) before distribution to ensure that the irradiation dose is sufficient for complete disinfection at the current water flow rate.

Since reverse osmosis water becomes too pure (TDS < 10 ppm) and tasteless, the next important step is often remineralization. Automatic dosing stations inject a precisely calculated amount of mineral salts (calcium, magnesium, potassium) into the water, restoring its physiological integrity and pleasant taste.

The final step is bottling and capping. This process takes place in an isolated unit (a "clean room" with positive pressure) to prevent the introduction of dust or bacteria from the air. The bottles are rinsed, filled with water, and immediately hermetically sealed with a cap, after which they are sent for labeling.

2.2 Building of block diagram of the production process

The main purpose of the diagram here is to present the production process in a clear and simple way. It shows the sequence of production processes, which helps to understand the whole process. Diagrams should include all production processes that are controlled by the organization itself.

In this way, a diagram, which is shown in Figure 1, can include all processes like distribution, retailing, and selling of the product. But the scheme of the technological process cannot be so complicated. In this way, a block diagram is the best way to represent the whole technological process. It should include enough technical elements and details for more precise production conditions.

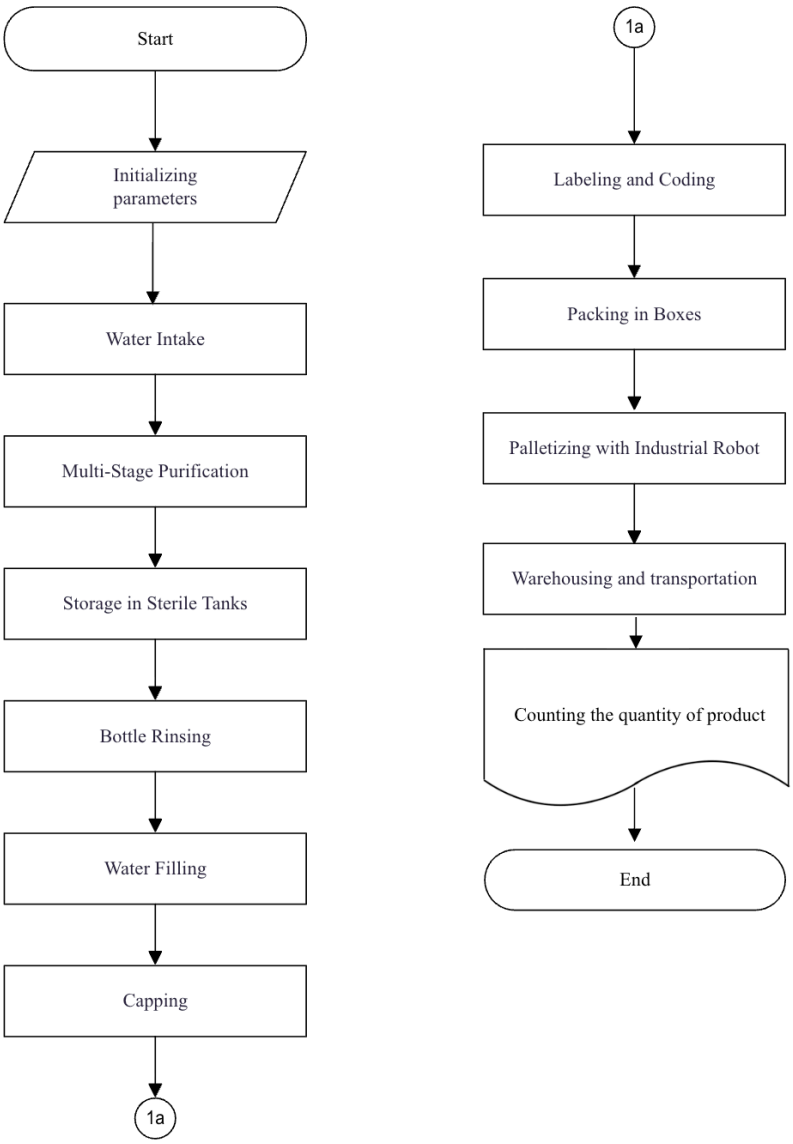

Figure 1 – Structure schema of the production process of bottled water

Here, in Figure 1, we can see the structural schema of the production of bottled water. It includes all the main parts of the technological process.

Based on this structure schema, the block diagram, which is shown in Figure 2, of water purification can be composed:

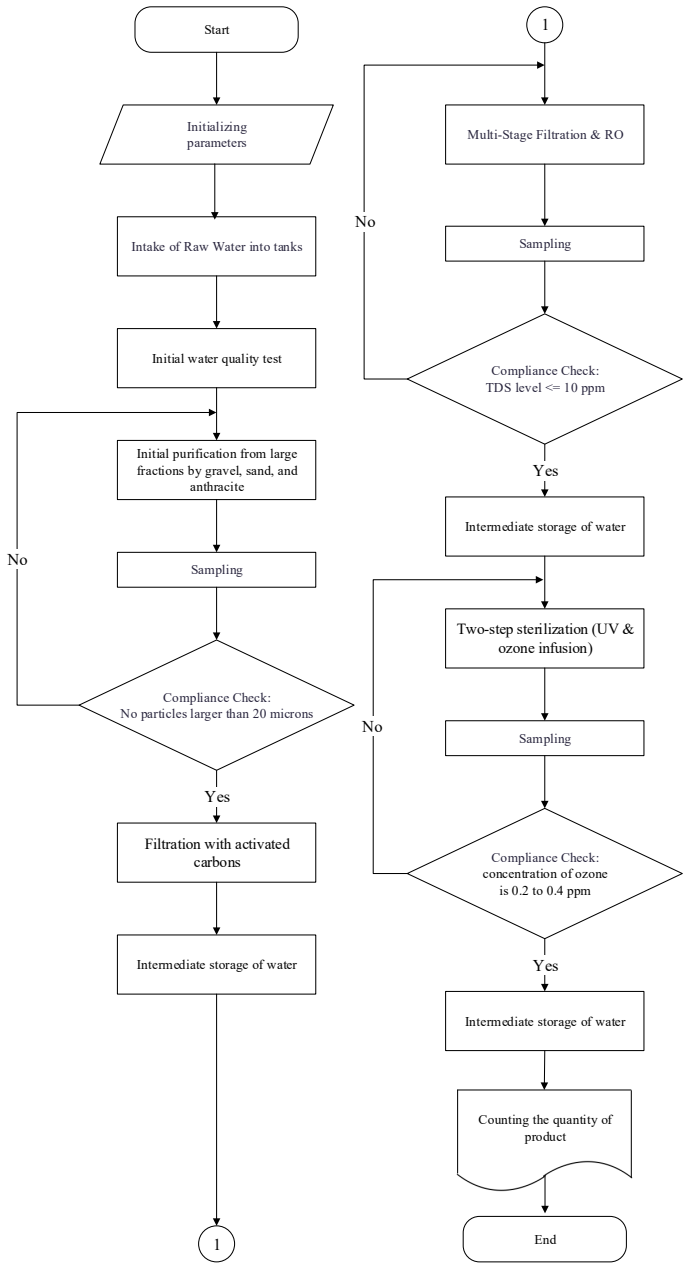

Figure 2 - Block diagram of the process for the purification of raw water before bottling

The main parameters during purification process are shown in Table 1 below.

Table 1 - Controlled parameters of the production process in figure 2.

Parameter name	**Unit of measurement**
Water Pressure	5 – 15 bars
Water Temperature	10 – 30 °C
Amount of water	0 – 1000 litters

Continuation of Table 1.

Parameter name	Unit of measurement
Water Level	0 - 100% / 0 - 3 meters
Flow Rate	100 – 500 Liters/minute
Total Dissolved Solids	≤ 10 ppm (parts per million)
Particle size	≤ 20 micron

Here is a block diagram of the bottle production, filling, packaging, and storing processes presented in Figure 3:

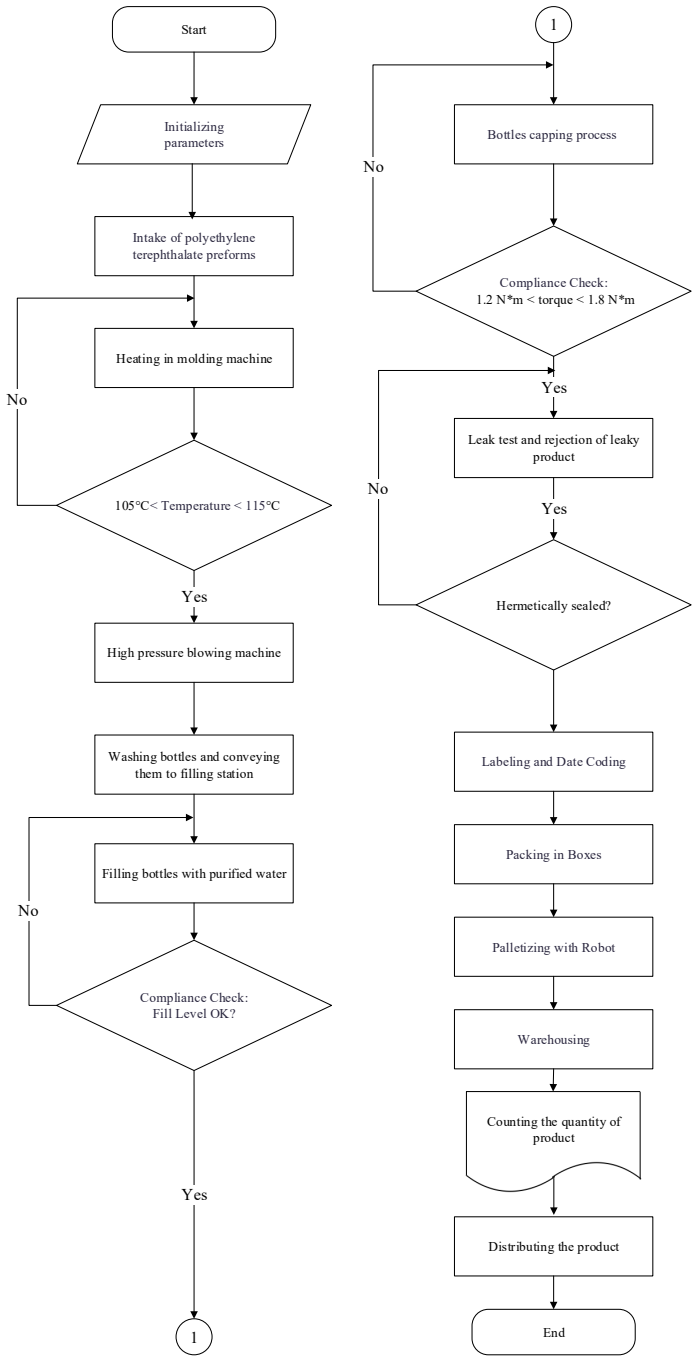

Figure 3 - Block diagram of the process for the bottle production, filling, packaging, and storing.

Here are controlled parameters, in Table 2, of the production process shown in Figure 3.

Table 2.Controlled parameters of the production process in figure 3.

Parameter name	Unit of measurement
Water Pressure	2 – 6 bars
Preforms Temperature	105 – 115 °C
Amount of water	0 – 10000 litters
Water Level	0 - 100% / 0 - 10 meters
Flow Rate	50 – 300 Liters/minute
Conveyor Speed	0.2 – 1.5 m/s
Torque	1.2 – 1.8 N*m
Bottle Count	0 – 10000 (Number)

It is really necessary to know all controlled parameters, because they present all conditions of each production process.

An analysis of all of these parameters listed in Table 1 can provide a total understanding of the water treatment system's operating mode variety. These values are not just statistical data; they're critical information for the programmable logic controller (PLC). If any of these parameters are outside these limits, then a fast response from the automation system is required: from just adjusting the actuators to completely shutting down the all line. Also, water pressure (5–15 bar) and flow rate (100–500 L/min) are important parameters.

Keeping pressure within this range is crucial for the efficient operation of reverse osmosis membrane. Low pressure can result in a drop in permeate flow, while lage pressure can damage the filter elements. The temperature range of 10–30°C was also chosen for a reason. Water that is too warm provides accelerated bacterial growth before the sterilization stage, and while water that is too cold can reduce the effectiveness of chemical reactions during pre-treatment and even change the water viscosity, which affects flow meter readings. Quality parameters such as TDS (< 10 ppm) and particle size (< 20 microns) serve as indicators of filter integrity. If these sensors record an increase in these parameters, this signals a membrane rupture or saturation of the carbon filters, which can require service intervention. If the water has reached all of these purity parameters, the process moves to the mechanical production and packaging phase, which is clearly illustrated in Figure 3.

This diagram demonstrates the integration of two flows: the flow of the prepared product (water) and the flow of packaging materials (preforms, lids, labels). The process shown in the diagram begins with the blow molding of PET containers. This is an energy-intensive stage where preforms are heated and inflated in molds under high pressure. Next comes the rinsing and filling unit, where synchronization is key: the feed rate of empty bottles must perfectly match the water flow rate to ensure precise filling (filling level) and avoid product loss. The final stages—capping, labeling, and palletizing—transform individual bottles into pallets ready for transport.

3. Description of the Selected Robotic Manipulator

A palletizing robot is an industrial manipulator, which is specially designed for tasks of automated placement of production, such as boxes, cardboards, bags from one place (in out case from the conveyor) to another - the pallets. A palletizing robot can be characterized by very high precision, high speed, and low maintenance costs. Its implementation allows to a significant increase in the efficiency and production speed of the line, ensuring technical trim to increasement of production volumes without additional stuff hiring.

A palletizing robot, which is equipped with a multifunctional gripper, can handle a lot of different stacking schemas. Due to various gripper types (such as "support" grippers for bags, vacuum, or magnetic), a single robot can be used for a major of operations.

Today, modern robotic systems are widely used in many industries, such as the food production industry, pharmaceuticals, and even logistics. They significantly help to simplify the product storage process. Reliable models of automatic palletizers help us reduce costs and increase the volume of packaged products. They can easily form a special complex system of pallets consisting of several layers.

For solving the key task of this work, which consists of palletizing boxes up to 20 kg, we need a special 6-axis industrial robotic manipulator to provide full functionality in the palletizing process.

Yaskawa Motoman MH50-35 belongs to the MH (Material Handling) series and is can be assumed as a high-speed manipulator with an extended working space. It is designed for a wide range of work types, including material handling, palletizing, machine tending, and even assembly. This model of robotic manipulator can easily cover all the requirements set of our goals.

3.1 Description of General Characteristics (Yaskawa Motoman MH50-35)

For our work special 6-axis industrial robotic manipulator, Yaskawa Motoman MH50-35, manufactured by the Japanese company Yaskawa Electric Corporation, was selected. Yaskawa, whose full name is Yaskawa Electric Corporation, is a Japanese company that is one of the largest manufacturers in the world of drive technologies, industrial robots, manipulators, and even automation process systems. This company was founded in 1915 and is headquartered in Kitakyushu, Japan. Yaskawa has manufacturing bases and R&D centers worldwide, which are located in Japan, the United States, Germany, China, Sweden, and Finland.

The choice of this model was driven by the ideal balance of its characteristics and process requirements. With a single box weighing up to 20 kg, the robot's rated load capacity of 35 kg provides the necessary power reserve, even taking into account the weight of the pneumatic or mechanical gripper itself.

Six-axis kinematics gives the robot flexibility unavailable to simple gantry palletizers: it can freely rotate the load in space, creating complex layering patterns for maximum pallet stability. Furthermore, the impressive working radius allows the manipulator to service two palletizing zones simultaneously or pick products from

different conveyors, while high positioning accuracy ensures perfect stack geometry even at maximum line speeds. This robotic arm shown in Figure 4.

Figure 4 - External appearance of the Yaskawa Motoman MH50-35

The Motoman MH50-35 can be assumed as a high-productive robotic manipulator which is optimized for material handling applications, which is required for our purposes, where large work volumes and high level production line capacity is required. The MH50-35 allows the ensure process of creation of highly efficient production cells with significantly increased productivity, especially in palletizing, machine tending, and even large-scale assembly.

Here are the key features of the MH50-35 model are listed below:

High workspace area, ability to manipulate with high-weight products, and large reach zone: The robotic manipulator combines a possibility of 35 kg of payload with an impressive horizontal reach of 2538 mm. This allows us to service not a single, but multiple stations (for example: one conveyor and two pallets).

High speed of operations: Due to the powerful drives and an advanced “DX200” control system, the robot delivers high speed in all directions, which reduces the number of cycles and increases the level of productivity.

Mounting flexibility: The MH50-35 robotic manipulator can be placed on the floor, wall, or ceiling (depending on the model). This is very useful when a certain position of operating is required;

Internal cable routing: All cables and hoses are placed inside the robot's "arm", starting from the base to the wrist. It helps us to prevent cables and security systems from being snagged and damaged while industrial processes, which increases service life and reliability;

Durable design: The robotic manipulator’s “wrist” part construction has an IP67 protection and IP54 rating for the main body construction, which ensures reliable operation in harsh industrial environments (dust, splashes);

Main Applications: Material Handling, Palletizing, Machine Tending, Assembly, Cutting, Dispensing, Loading/Unloading.

3.2 Motion Type and Axis Characteristics

The Yaskawa Motoman MH50-35 robotic manipulator model has an articulated design with 6 degrees of freedom (6 axes) (Shown in Figure 5), which provides maximum flexibility in positioning.

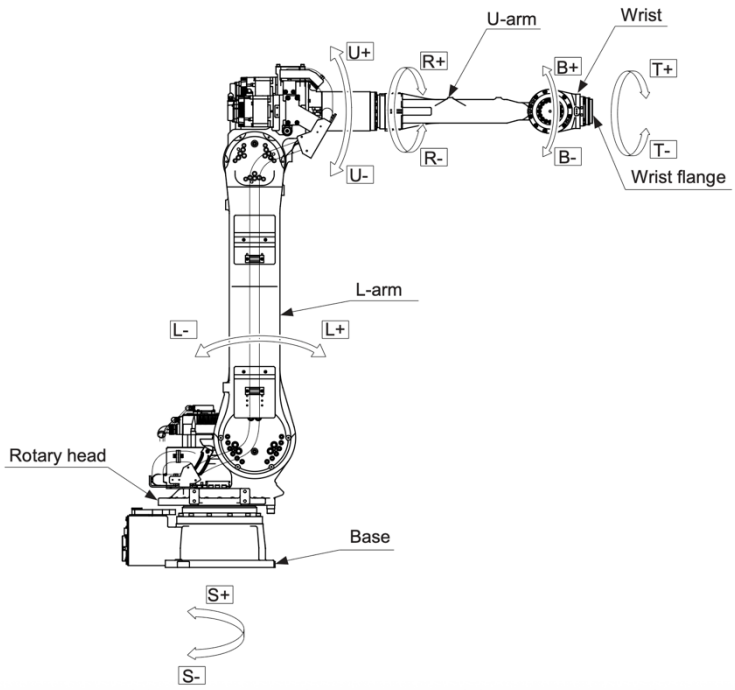

Figure 5 - Axes of the Motoman MH50-35 robot

Possible directions of movement along the axes are shown in Figure 5. The range of motion for each axis is presented in Table 3.

Table 3 - Range of motion of MH50-35

Axis	**Type of motion**	**Range of movement**
S-Axis	turning	±180°
L-Axis	lower arm motion	+135°, -90°
U-Axis	upper arm motion	+296°, -160°
R-Axis	wrist roll	±360°
B-Axis	wrist pitch/yaw	+125°
T-Axis	wrist twist	±360°

The maximum axis speed, which determines overall productivity and cycle time, is shown in Table 4.

Table 4 - Maximum axis speed of MH50-35

Axis	Speed, degree per second
S-Axis	180°/s
L-Axis	140°/s
U-Axis	178°/s
R-Axis	250°/s
B-Axis	250°/s
T-Axis	360°/s

Based on this table, we can say that this model of robotic manipulator has sufficient rotation speed on all axes, which allows to significantly speed up the palletizing process.

3.3 Overall Dimensions

The overall dimensions of the robotic manipulator, which are shown in Figure 6, are key parameters when designing a robotic cell and calculating the required space.

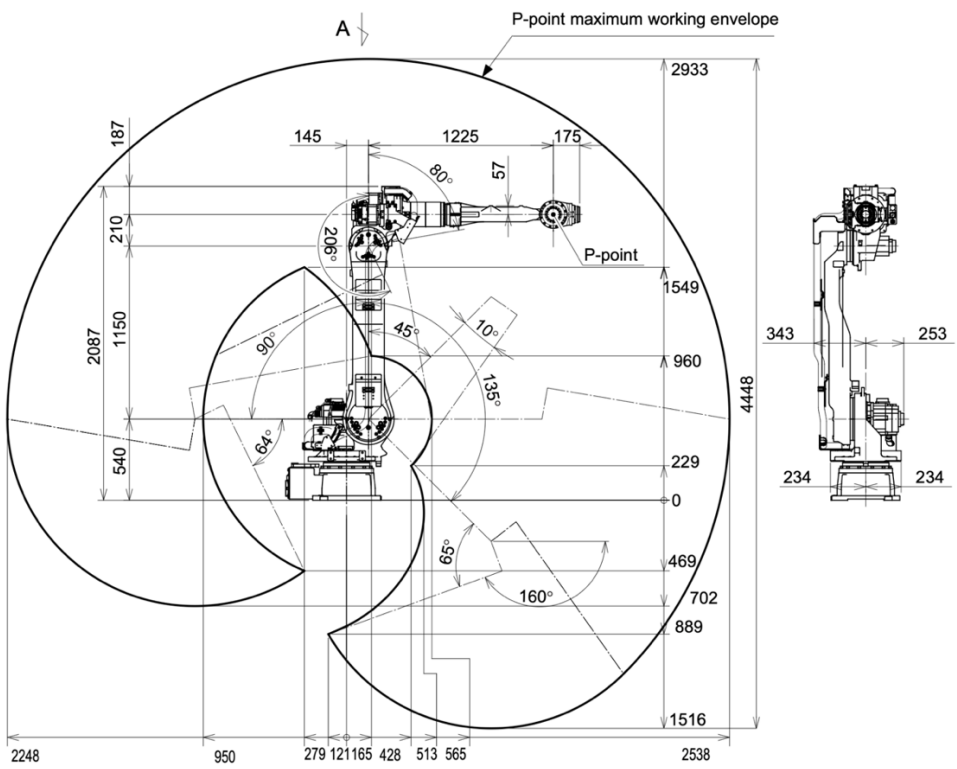

Figure 6 - Dimensions and P-Point Maximum Envelope MH50-35

In addition to the main dimensions shown in Figure 6, the Baseplate dimensions are also shown in Figure 7 to accurately determine the installation position of the robotic manipulator.

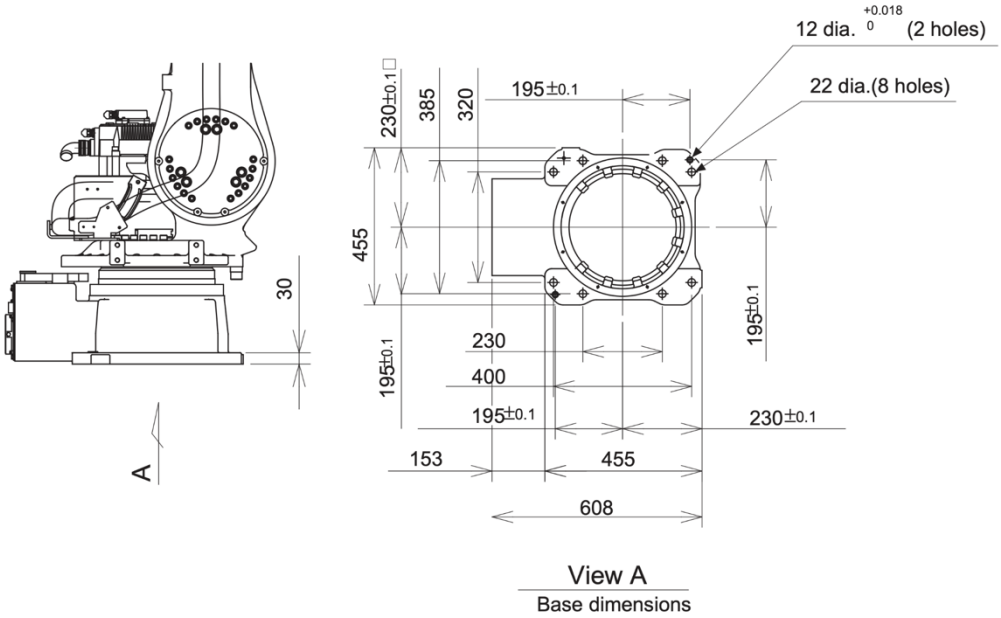

Figure 7 - Baseplate Dimensions of MH50-35

The robotic manipulator can be mounted on the floor, wall, or ceiling (attached using the Baseplate mount as shown above in Figure 7), providing additional flexibility during integration.

3.4 Robot Load and Selection of End-Use Tool (Grip)

The main parameters of the allowable wrist load are listed in Table 5.

Table 5 - Allowable moment of operating for MH50-35

Axis	Moment, Newton per meter	Total Moment of Inertia, kilogram per square meter
R-Axis	147 N•m	10 kg•m2
B-Axis	147 N•m	10 kg•m2
T-Axis	78 N•m	4 kg•m2

Exceeding the parameters specified in Table 5 may result in serious damage to the equipment and even its failure.

Also, for proper operation of the robotic manipulator, the ambient conditions specified in Table 6 must be met.

Table 6 - Required ambient conditions for MH50-35

Name of the parameter	Value
Temperature	0° to 45°C
Humidity	20 to 80% RH at constant temperature
Vibration Acceleration	Less than 4.9 m/s2 (0.5 G)

Compliance with these ambient conditions will significantly increase the service life of the equipment and reduce the risk of failure.

The main robot parameters are listed in Table 7.

Table 7 - Main parameters of MH50-35

Name of the parameter	Value
Degree of Freedom	6
Payload	35 kg
Approx. Mass	570 kg

The weight of the production (water crates in our case) to be palletized varies up to 20 kg. According to the information in the table above, the maximum load capacity of the MH50-35 robotic manipulator is about 35 kg. This provides us with a significant 15 kg extra load weight, which is a significant advantage.

This safety margin allows us to use a reliable and potentially heavy work tool (gripper). The robotic manipulator operates below its maximum capacity, which helps us to significantly reduce wear and increase the durability of whole operating system.

For gripping water crates (main product), a vacuum gripper can be assumed as the most effective device. We chose the OnRobot VGP30 vacuum gripper, shown in Figure 8, for our task. This gripper is ideal because its maximum load capacity is 30 kg, which provides a precise 50% safety margin for the product weight.

Figure 8 - OnRobot VGP30 vacuum gripper

Below in Table 8 are the main characteristics of this vacuum gripper.

Table 8 - Main parameters of VGP30

General Properties	Minimum	Typical	Maximum	Unit
Vacuum	5 % 0.05	- -	60 % 0.607	Vacuum Bar
Air flow in total	0	-	440	L/min
Air flow on each channel	0	-	220	L/min
Payload on cardboard boxes	-	-	30	kg
Vacuum cups	1	20	20	pcs.
Gripping time (measured with vacuum target 30%)	-	150	-	ms
Releasing time	-	80	-	ms
Noise level	-	59	62	dB(A)
Vacuum pump	Compressed air input			
Dust filters	Integrated 50µm, field replaceable			
IP Classification	IP54			
Dimensions	390 x 240 x 62.10			mm
Weight	3.1			kg

This OnRobot VGP30 vacuum gripper was selected based on its characteristics, which fully satisfy our process.

3.5 Load diagrams

When designing a robotic cell, the rated load capacity of the manipulator alone should not be used as a guide. The location of the center of gravity of the "grip + load" system relative to the mounting flange is a critical factor. At high speeds and accelerations typical of palletizing, a displaced center of gravity creates significant moments of inertia. These forces can overload the axis drives, even if the total weight does not exceed 35 kg. Manufacturers provide special charts to verify the permissibility of such dynamic loads.

Load diagrams show a dependence of bounded effective load against its center of mass, located corresponding to 6th axis (arm) flange. In our case, the Load diagram is shown in Figure 9.

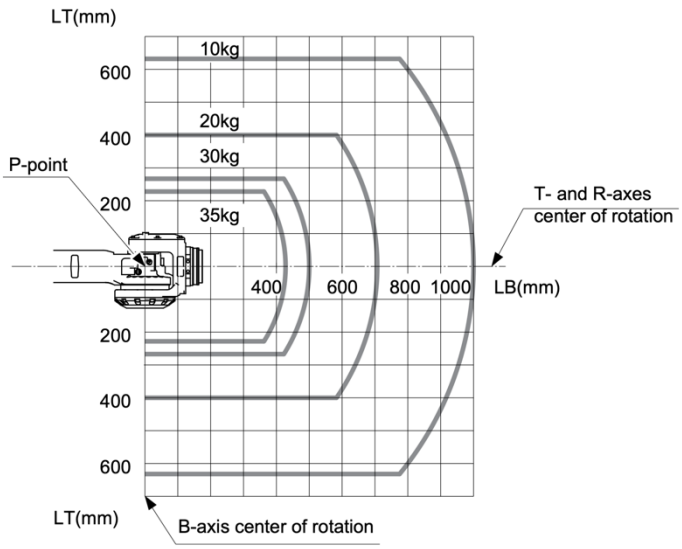

Figure 9 – Load diagram

For the robot in question (MH50-35) inertia moment on R and B axes is defined as 147 N·m, on T axis — 78 N·m.

Diagram analysis made from drawings above shows that for the 22.55 kg load (drastically lower than the upper bound of 35 kg), the crate's center of mass will be located far from the flange, yet the robot still would work within acceptable bounds with slight overhead. The observation is vitally important for crates of all sizes on the cycle's highest speed, allowing for a smooth process flow.

3.6 Work Area

Work zone defines the amount of space necessary for robot's operational capacity. The work zone side view was already shown in Figure 6. Below, in Figure 10, the work zone is shown, viewed from above.

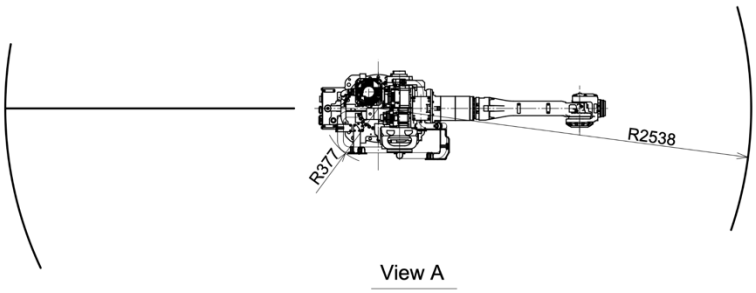

Figure 10 – Work zone (view above)

Below, in Table 9, all work zone dimensions corresponding to the above figures are indicated.

Table 9 – Work zone dimensions

Parameter	Length, mm
Horizontal span (max)	2538
Vertical span (max, up)	2933
Vertical span (max, down)	1516

MH50-35's lengthy working zone (spanning more than 2.5 meters horizontally) is its key advantage for pelleting. This lets the robot maintain one box service line and two (or even three) pelleting lines, securing constant flow of the process even when pellets at their full capacity are interchanged to new ones.

Being in the robot's working zone during its working cycle is forbidden and can lead to grave injuries.

3.7 Accuracy and Calibration

Yaskawa employs different methods in calibration of its robots, described further in this section (Table 10). Initial calibrating data is generated in-factory upon floor montage of the robot.

Table 10 - Calibration methods

Type of calibration	Description
Standard calibration (Zeroing)	Process of "zeroing" encoders of the robot. The machine is set into "home" position (via body markings), DX200's software resetting the positions to state zero.
Absolute Accuracy	Yaskawa robots contain absolute encoders (ABS) responsible for data regarding position of the axes being backed up even when power is off, eliminating a need for an additional calibration upon every launch.
Load Compensation	DX200 controller's software lets input precise data on mass and center of gravity of clean load (box + grabber). System auto-corrects movement trajectory, accounting for inertia compensation and manipulator bending under load, greatly increasing trajectory's accuracy.

Calibration by marking (Zeroing): Default method of standard calibration in field conditions. Is accomplished with a remote for learning (FlexPendant). The operator manually matches marks on all 6 axes, "Zeroing" is accomplished past that step.

ARM, Advanced Robot Motion: This function of DX200 (analogous to "Absolute Accuracy" of ABB) uses advanced algorithms for pathing, independent of speed. Critically important for offline programming due to the program's guaranteed consistency of commands and subsequent movement.

The robot possesses a low margin of repositioning error, guaranteeing precise and even placement of crates on the pallet (Repeatability is ±0.07 mm).

3.8 Programming software

Yaskawa Motoman robots are handled by a DX200 controller. Language used for program development is Inform III, being a flexible and powerful language, specifically adjusted for robot handling.

For offline programming, simulation and cell handling Yaskawa offers a complete software package named MotoSim EG-VRC. This software is analogous to RobView from ABB.

MotoSim allows an operator or engineer to create a dedicated 3D-model of a robot cell on a PC. It is possible to import conveyor, pellet, restraint and robot models.

Simulation: In MotoSim it is possible to execute and compile programs on Inform III, fully simulating the work process.

It allows for the operator to calculate the cycle time, check accessibility of all working parts and verify the absence of collisions before connecting it to field devices.

File management: Just like RobView, MotoSim enables a straightforward access to PLC’s memory directories for parameters and programs to be backed up, in addition to straightforward task completion of the robot.

Remote monitoring: The software lets remotely monitor the condition of the robot, check input/output (I/O) configuration and variables in real time.

3.9 Advantages and drawbacks of robot integration

As advantages can be assumed:

High efficiency: Robot is capable of working 24/7 at high speed without stopping, allowing for absence of a bottleneck on the pallet packaging stage compared to human labor.

Significant overhead on lifting capacity: MH50-35 (35 kg) easily handles tasks of moving weights of 20 kg. Such load overhead (70%) reduces component strain and extends manipulator life cycle.

Flexibility and large working zone: Horizontal span of 2538 mm lets the robot maintain one conveyor and two pellet stations simultaneously, securing uninterrupted workflow.

High accuracy and stability: Repeatability of ±0.07 mm guarantees perfect crate alignment, critically important for further storage and containment.

As drawbacks can be assumed:

High baseline cost: Basic investment into robot acquisition, purchase of DX200 controller, gripper, safety systems (light barriers, restrictive barriers) and integration is steep.

Maintenance requirements: Robot requires qualified technical personnel for programming, settings and regular maintenance (e.g. oil replacement).

Surface requirements: Due to its weight (570 kg) and high speed of rotation, the robot must be placed in a restricted zone with protective seals, also imposing additional demands on space requirements for the industrial setting. The second strong drawback is the requirements to the staff's qualification and education. Compared to simple mechanical manipulators, service of the Motoman robot and DX200 controller requires engineers being present among the workers, knowledgeable about the Inform III language and understanding the principles of mechatronics. It leads to additional spendings aimed at providing staff with knowledge and instruments or outsourced labor. The periphery equipment's integration is yet another notable difficulty. Projecting and creating the gripping device (End-of-Arm Tooling, EOAT) for a specific type of bottles of boxes — is a separate engineering task. Badly constructed gripper greatly reduces the precision of the robot, leading to the possible drop of the weight under high acceleration.

Finally, there are requirements in place to safety and production space. Robot cell requires the creation of enclosed parameter (safety fence) with blockages. Even if Yaskawa Motoman MH50-35 is relatively compact, the safety zone necessary to exclude the risk of injury for staff takes a significant part of factory space. Taking into account the drawbacks listen above, the choice of Yaskawa Motoman MH50-35 for pelleting remains a strategically sound move. The key factor attributing to such verdict is the business term total cost of ownership (TCO). High initial investment (CAPEX) is compensated with greatly reduced operational cost (OPEX) long-term. The DX200 controller used in MH50-35 plays a key role in that, recuperating energy when the axes slow down, reducing the energy consumption by 15–20% compared to analogs. Furthermore, using the programming package MotoSim EG-VRC, it is possible to optimize the trajectory of movement even before the conveyors are launched, reducing cycle time by fractions of a second. On a scale of a year, it transforms into thousands of additional pellets.

Thus, implementation of the robot — is a transition from human-dependent model to predictable, calculable and scalable automated production. For a factory focused on production of bottled water, where the demand is based on the season and quick hiring is not viable, such stability becomes a decisive advantage against the competitors. Return on investment (ROI) of such system working on three shifts is usually from 18 to 24 months.

4. Description of the process of bottled water production

The production process of manufacturing bottled water is done through the following steps programmed in FBD. The main stages of this process are shown below.

Unfiltered water is fed into the storage tank 1 and the following purification system: The process starts from filling the main storage tank with raw or untreated water. Then Valve 1 opens to get the raw water in Tank 1. The measuring devices of the water level in the tank are given by a special pressure sensor (Level Inicator Transmitter (LIT)) and a tank overflow sensor (LLH). The maximum water level in the tank is 1500 mm. When this is reached, the filling should automatically stop. After that, water leaves the tank through a passage from valve 2, which opens if there is any water inside the tank, where the value is not zero. Then Pump 1 pumps the unfiltered water into the cleaning system, but only if valve 2 is open. The following steps of the cleaning system are: a Carbon Filtration System, which comprises measurement devices: a Temperature Transmitter PT1000 (TT) - whose value should not rise more than 30°C, and a Ph-Level Transmitter (PHT), whose value shall be between 6.5 and 7.5 pH, which is really important in the filtering process. The next step in the filtration system of a Multi-Stage Filtration System, where the water is monitored by a pressure-indicating transmitter (PIT), the values of which must also not exceed 0.4 bar.

Filling and packaging plastic bottles: The plastic bottles, after being processed at one stage of production, are transported by Conveyor 2 into the filling zone. After detecting the bottle in a special place for filling by a sensor, Conveyor 2 stops, and then Valve 3 opens, which allows to start of the filling of the bottles until full condition with water that has passed through all previous cleaning stages. An Ultrasonic sensor detects when the bottle is full, and after that, Conveyor 2 turns on again and brings the bottle further down the belt into the special packaging zone. A Limit Switch is installed at the end of this conveyor. It allows for to detection of the arrival of bottles at a certain position. These bottles are then processed into packaging to the crates, which in turn are sent for palletizing further.

Crate Detection Process and Positioning: The process starts with incoming crates with bottled water that are placed onto the next conveyor (Conveyor 2), which helps to move them further along the belt. A special sensor (Inductive Sensor) constantly scans the area where the box has to reach for an object occurance. If it does not detect a crate at its special destination area, that indicates a malfunction that prevented the crate from transporting from its initial placement position to its destination place, which means that the belt will keep moving the crates, and the crate feeding cycle will repeat again until next crate reaches detecting area. When the sensor detects a crate, Conveyor 2 automatically stops, which means that the crate is secure and ready for the next step: palletizing.

Count of Incoming Product: Limit Switch, which is at the end of Conveyor 1, also serves to count the number of bottles that enter the packaging area. Using a Counter Unit (CTU), this system keeps tabs on the total number of bottles processed (Bottle Count). This same concept continues with the Inductive Sensor, which is

attached to the end of Conveyor 2 and works to register and count crates.

Palletizing with robotic arm: After a crate is firmly in place, the palletizing operation with a Yaskawa Motoman MH50-35 industrial robot begins. The robot is programmed to lower an OnRobot VGP30 vacuum gripper and hold a crate weighing up to 20 kg. In this step, the conveyor is at rest, controlled through the use of the On-Delay Timer (TON) in the ladder diagram. After the crate has been palletized, the robot sends a signal for the line to restart.

Data Monitoring and Alarm System: The following parameters are continuously monitored by the system: Water level in Tank 1: The water level must not exceed 1500 mm. Temperature in the Carbon Filtration System: The temperature must not exceed 30°C. pH level in the Carbon Filtration System: The pH should be between 6.5 and 7.5 pH. Pressure in the Multi-Stage Filtration System: The pressure must not exceed 0.4 bar. In case any of the above-named parameters crosses its pre-set level, a warning system is triggered and the entire production line comes to a standstill.

Conveyor Restart and Continuous Production Line Operation: In the case of an Auto-mode system, after every pick-and-place operation, the conveyor restarts automatically to feed the next crate to the unloading area. The same procedure is followed for the next unit, which again starts with its detection by the inductive sensor. The same happens with the filling of bottles and the automated filling of the tank with water, the water level of which, in Auto-Mode, remains between 50% and 80% of the maximum level. This ensures a continuous flow in production without any disruption.

Integration and synchronization: All parts involved, such as sensors, limit switches, timers, counters, and the Yaskawa robotic arm, act in concert with each other, controlled by one central PLC. The developed software repeats every step of the process, giving an opportunity for real-time monitoring while maintaining operational repeatability at ±0.07 mm and process stability.

Once the case is securely positioned and detected by the sensor, the palletizing operation begins using a Yaskawa Motoman MH50-35 industrial robot. The robot is programmed to lower an OnRobot VGP30 vacuum gripper to securely hold the case, which can weigh up to 20 kg. Before lifting, the system verifies that the vacuum pressure is sufficient to hold the load, ensuring safety and preventing product damage during handling.

A robot stacks crates on pallets according to a pre-programmed pattern. Once a pallet is filled, it is transported to the warehouse for storage. The entire production cycle—from the initial intake of raw water into Tank 1, monitored by level sensors (LIT) and overflow sensors (LLH), through precision carbon and multi-stage filtration (with temperature and pH monitoring), to automatic bottling and robotic palletizing—is fully integrated under the control of a central PLC. Function block programming (FBD) enables real-time synchronization of all valves, pumps, and conveyors based on sensor feedback. This automation ensures that bottled water meets strict quality standards (TDS, purity), while maintaining high production efficiency and minimizing human error, ensuring the release of a finished, packaged product.

5. Robot Description

Process of palletization of drinking water engages several advanced systems of automation, including the robot Yaskawa Motoman MH50-35, for high precision, performance and efficiency. This operation is critically important for adhering to logistical and production standards.

The process begins with packages containing bottles of fresh water being placed on the conveyors for palletization. Photoelectrical sensor, placed strategically towards the beginning of the conveyor belt, signals the impending approach of the box and then gives the signals to halt the conveyor's movement. Such process secures a precise position for the robot arm as a setpoint.

When the package is secured at the spot, Yaskawa Motoman MH50-35 takes over, located at the end of the conveyor belt. With VGP30 vacuum gripper, robot takes the box and carries it over to the pallet. Manipulator places the boxes on position programmed into it beforehand, thus maintaining equivalent positioning and necessary precision. When this task is accomplished, the conveyor belt is forcefully stopped from the Modicon M241's side, which is the PLC we chose for this automation process.

The system uses a combination of different sensors and monitoring equipment to maintain its effectiveness. Conveyor sensors, sensors dedicated to pallets and safety sensors are all synchronized to Modicon M241, securing a smooth transition between the stages of box transfer and packaging into pallets. Such notion guarantees that the gripping cycle begins only when the package reaches the set position and the packaging zone is clear.

Robust mechanisms increase the safety margin of the system. If sensor doesn't detect the box on one iteration of the cycle, the conveyor will resume its work until the next setpoint would be reached. If the safety system detects movement or interference in the working zone of the robot, the whole process is forcefully halted, preventing casualties and injuries to the staff.

Yaskawa Motoman MH50-35, which has the load capacity of 35 kg and its horizontal span at 2538 mm, perfectly fits into the given process of palletization we outlined. Automating this process, the Yaskawa Motoman MH50-35 secures precise packaging, consistency in the quality of the packaging and high threshold of productivity. Its consistent work reduces time delay, eliminates the imprecisions of the manual packaging and most importantly, reduces the risk of physical injury for staff involved in the production process.

Thanks to complete integration with sensors, PLC and safety mechanisms, automated system of palletization is mechanically executed with great precision, increasing efficiency, safety and general productivity of the production process. Placement of the robot optimizes the usage of production space and decreases the risk of creating "bottlenecks" in the production.

This automated cell is a reliable and future-proof solution for end-of-line packaging, ensuring high-quality, consistent output at all times and reinforcing the facility's competitiveness.

6. Program Description

Production and robotic palletizing of bottled goods are realized by a modern automation system. The central role in this system belongs to the Schneider Electric TM241CEC24U programmable logic controller-a decision-making system for process control and reliability of industrial equipment. This PLC serves as the "brain" of the system, coordinating the operation of sensors, actuators (valves, pumps), a frequency drive, and a Yaskawa robotic arm in performing tasks that require significant human intervention.

PLC and Peripheral Configuration: The TM241CEC24U modulator is set up for 14 outputs and 10 outputs. High-speed inputs are configured to handle signals from position sensors that need instantaneous status (inductive sensors, limit switches), while transistor outputs allow for fast switching of control signals. An expansion module for receiving 4-20 mA current signals allows operation with individual big systems. The configuration now also provides a pressure sensor PIT and a temperature sensor PT1000, which will convert the physical current value into digital values for logical processing within FBD programs.

In this PLC architectural design, communication capability is the most important feature. The Ethernet port on board connects to an Ethernet/IP network for fast data exchange with the Yaskawa DX200 robotic arm controller. This enables the PLC not only to start the robot but also to coordinate the start and end of the stacking cycles.

Drive Conveyor Control: The Altivar Machine ATV320 frequency converter is integrated using a robust, sectional control scheme. The PLC uses contact output Q4, physically connected to digital input DI1 on the terminal block of the frequency converter. Upon the program logic-variable conveyor2-becoming TRUE, the PLC applies a +24V signal to input DI1, serving as the "Forward Run" command for the drive. All the motor speed and acceleration/deceleration parameters of the drive are pre-set in memory in the ATV320 to ensure the transmission stability and to reduce network load.

The FBD design is developed using Function Block Diagram (FBD) calculations; thus, data flows become transparent.

Water Treatment: Continuity logic queries level sensors. Using comparison blocks - LT (Less Than), in this program the variable Tank1_level is in focus. In the case of a level below a set maximum, the program turns on the water inlet valve. Filling is simulated by means of an ADD math block, incrementing values in each program cycle.

Filling Process: Synchronized by bottle position. When the Bottle_pos value reaches the setpoint, a logical condition given by a GE interlock stops the conveyor and opens valve 3. The TON timer counts the exact time for filling, which is 2 seconds, after which it generates a signal, completes the operation, and the conveyor starts. The KTU counter block monitors the number of finished products.

Robotic palletizing: when an inductive sensor detects a case at the end of the line (the case_position variable), the PLC network sends a command to the robot over Ethernet/IP. Within the program, this is visually controlled by using the

an_forward/an_rev variables as a proxy for rotating the manipulator axis. A signal gripper remotely turns on the OnRobot VGP30 vacuum gripper and timers provide a delay to securely hold the load before moving it.

Emergency handling is the safety system and the critical part of the program. Analog 4-20 mA signals coming from PIT and PT1000 sensors are converted to real values in bars and degrees Celsius. These values are checked by the continuity comparison blocks. If the pressure rises by 0.4 bar or the temperature is out of the normal range (>300 conventional units), the OR logic immediately activates the trigger of emergency_alarm. This resets the variable trigger to FALSE and completely stops the line, preventing damage to the equipment. It is this architecture that brings together responsible drive control, robotic networking, and cost-effective process monitoring to provide a flexible and fault-tolerant production control system. All physical connections are shown below in Figure 11.

Figure 11 – Physical connection

In Figure 11, the following physical connections were made (below, discrete outputs/inputs will be designated as DQ/DI, 24V power supply - SA and HL lamps): DI0 (%IX0.0) receives a signal from the Limit Switch, which is powered by SA1. DI1 (%IX0.1) receives a signal from the black wire of the inductive sensor, which

is powered by SA2 via the brown wire and is also connected to COM via the blue wire. The analog input module I0+ (%IW2) receives a signal from the Pressure Indicator Transmitter (PIT) via its black wire, which is powered by SA3 via its red wire. DQ4 (%QX0.4) sends a signal about the operation status of conveyor 2 to the discrete input Di1 of the ATV320 frequency converter, which will rotate the electric motor in the forward direction. DQ5 (%QX0.5) sends a signal about the state of the "start" variable to the HL1 lamp. DQ6(%QX0.6) signals the "emergency_alarm" variable to lamp HL2. DQ7(%QX0.7) signals the "stop" variable to lamp HL3. DQ8(%QX0.8) signals the "ind_sen_pos" variable to lamp HL4. DQ9(%QX0.9) signals the "lim_sw_pos" variable to lamp HL5.

6.1 PLC Configuration

The manufacture of water with drinking and pelleting is implemented using a PLC that is configured using a language called FBD, which ensures seamless automation with precision. The Schneider Electric TM241CEC24U PLC, shown in Figure 12, is the core of this automation system, which offers robust functionality for controlling the different steps involved in the process. Indeed, it scales up very well throughout the process. It has 14 digital inputs, including 8 fast inputs for high-speed signals, used in implementing sensors such as ultrasonic bottle detectors and limit switches. Besides these, it also features 10 outputs, where 4 are fast transistor outputs and 6 are relay outputs, to control components such as the conveyor motor and robotic arm. Optional analog modules can be added to this for additional functionality in order to handle analog signals wherever necessary.

Figure 12 – Modicon M241 PLC/TM241CEC24U

The system allows for communication via multiple interfaces: an Ethernet port for networking and remote monitoring, a CANopen port to enable device communication, and RS232/RS485 ports for serial communication. These communications ensure compatibility and smooth integration within other components of the automation system, such as the Altivar Machine ATV320 VFD and the Yaskawa Motoman MH50-35 robotic arm. A memory structure of the PLC

includes 128 kB of program memory to handle application logic, 64 kB of data memory to store variables, and retentive memory that retains critical data through power cycles.

The PLC works in cooperation with Altivar Machine ATV320 VFD, which controls the conveyor motor. The VFD can support three-phase motors, with power from 0.18 kW to 15 kW, appropriate for conveyor systems in manufacturing. It includes 6 digital inputs for commands such as start/stop and speed control, 2 analog inputs for precision modulation of motor speed, and 1 analog output for feedback monitoring. This VFD changes the motor frequency and voltage according to the command from the PLC, moving bottles smoothly and precisely into the boxes, and the accuracy of the placing of boxes into pellets.

Electrical connections of this system are planned out for maximum operational reliability and safety. Digital Input (DI) is wired to sensors and switches to provide input signals representing process start, stop, and monitoring of the process. Outputs are wired to actuators, the robotic arm, and conveyor motor. Safety of the system is ensured by using power isolation, grounding, and circuit breakers against electrical hazards. Careful routing of analog and digital circuits ensures signal integrity.

Finished crates of bottled water are conveyed to the robotic cell, which then initiates the palletizing process. A sensor detects an incoming crate and signals the Modicon M241, which then communicates with the robot's Yaskawa DX200 controller. The position of the crate-which can weigh up to 20 kg-is then confirmed once it reaches the pick-up point. In this scenario, the material handling function is initiated by the Yaskawa Motoman MH50-35 robotic arm, which was selected because it features a load capacity of 35 kg. Equipped with an OnRobot VGP30 vacuum gripper, the robotic arm picks up the crate and stacks it onto a pallet according to a pre-defined scheme programmed in advance. The program of the robotic arm ensures it will account for load compensation and will place the crate with high repeatability of ±0.07 mm. Following the completion of the stacking motion by the robotic arm, it signals its completion and prepares itself for the next crate to be provided from the conveyor.

Throughout the process, real-time monitoring is employed using integrated sensors and feedback systems. A pressure transmitter continuously monitors the internal pressure of the tank during water cleansing. If the pressure goes beyond safe limits, the system triggers an automatic closure of valves to avoid overfilling or spilling. This monitoring ensures consistency in product quality and minimizes wastage. Furthermore, the PLC and associated components operate in synchronization with each step of the capping process, which is done with precision and without delays.

With the TM241CEC24U PLC, Altivar Machine ATV320 VFD, and Yaskawa Motoman robotic arm all combined into one tightly integrated system, it performs the automated process efficiently and reliably, becoming part of the drinking water pelleting workflow. The use of FBD in the program run by Modicon M241 and advanced automation components guarantees the smooth coordination between sensors, actuators, and controllers that provide a high degree of accuracy and consistency in production.

6.2 Table of variables

Below, Table 11 lists all the variables used in the FDB program. It provides a clear definition of each variable name, its topological address, data type, initialization, and a brief description of the function. This table allows us to determine the purpose and operating principle of each variable in our code, which is a very important parameter when reading the program code.

Table 11 - Variables

№	Scope	Name	Adress	Data Type	Init	Comment
1	VAR	bAnForward	-	BOOL	-	Rotate robotic manipulator in forward direction
2	VAR	bAnRev	-	BOOL	-	Rotate robotic manipulator in reverse direction
3	VAR	bAutoMode	-	BOOL	-	Auto-mode
4	VAR	bBElementVis	-	BOOL	-	Visibility of beginning element of Conveyor 1
5	VAR	bB2ElementVis	-	BOOL	-	Visibility of beginning element of Conveyor 2
6	VAR	uiBottleCount	-	UINT	-	Bottles count
7	VAR	bBottleCountReset	-	BOOL	-	Reset bottles count
8	VAR	bBottleFillComplete	-	BOOL	-	Bottle fill complete status
9	VAR	iBottleLevel	-	INT	-	Water level in bottle
10	VAR	iBottlePos	-	INT	-	Position of bottle on Conveyor 1
11	VAR	uiBoxCount	-	UINT	-	Boxes count
12	VAR	bBoxCountReset	-	BOOL	-	Reset boxes count
13	VAR	iBoxPosition	-	INT	-	Position of the Box

Continuation of Table 11.

№	Scope	Name	Adress	Data Type	Init	Comment
14	VAR	rBoxRotAn	-	REAL	-	Angle of rotation of the Box
15	VAR	bConveyor	-	BOOL	-	Conveyor 1 position
16	VAR	iConveyorElementPos	-	INT	-	Position of Conveyor 1 elements
17	VAR	iConveyorInterval	-	INT	50	Interval between Conveyor 1 elements
18	VAR	iConveyorSpeed	-	INT	1	Conveyor 1 speed
19	VAR	bConveyor2	-	BOOL	-	Conveyor 2 status
20	VAR	iConveyor2ElementPos	-	INT	-	Position of Conveyor 2 elements
21	VAR	iConveyor2Speed	-	INT	1	Conveyor 2 speed
22	VAR	cCTU0	-	CTU	-	Count up for bottle number
23	VAR	cCTU1	-	CTU	-	Count up for box number
24	VAR	bEmergencyAlarm	%QX0.6	BOOL	-	Emergency alarm status
25	VAR	ftFTRIG0	-	F_TRIG	-	Indicates Falling Edge signals
26	VAR	iFlowOut	-	INT	1	Flow out the valve 3
27	VAR	bGrab	-	BOOL	-	Box grabbing status
28	VAR	bIndSen	%IX0.1	BOOL	-	Inductive sensor input data
29	VAR	bIndSenPos	%QX0.8	BOOL	-	Position of inductive sensor

Continuation of Table 11.

№	Scope	Name	Adress	Data Type	Init	Comment
30	VAR	bLElementVis	-	BOOL	-	Visibility of last element of Conveyor 1
31	VAR	bL2ElementVis	-	BOOL	-	Visibility of last element of Conveyor 2
32	VAR	bLimSw	%IX0.0	BOOL	-	Limit Switch input data
33	VAR	bLimSwPos	%QX0.9	BOOL	-	Position of Limit Switch
34	VAR	bMotor	%QX0.4	BOOL	-	Motor status
35	VAR	bNewBottle	-	BOOL	-	Start new bottle
36	VAR	bOpenValve1	-	BOOL	-	Open Valve 1
37	VAR	bOpenValve2	-	BOOL	-	Open Valve 2
38	VAR	bOpenValve3	-	BOOL	-	Open Valve 3
39	VAR	iPressureTransmitter	%IW2	INT	-	Pressure transmitter input data
40	VAR	rPressureVal	-	REAL	-	Value of pressure in Bar
41	VAR	bPump1	-	BOOL	-	Pump 1 position
42	VAR	rtRTRIG0	-	R_TRIG	-	Indicates Rising Edge signals for emergency stop
43	VAR	rRotAn	-	REAL	0	Angle of robotic manipulator
44	VAR	bStart	%QX0.5	BOOL	-	Start process
45	VAR	bStartPump1	-	BOOL	-	Start Pump 1
46	VAR	bStop	%QX0.7	BOOL	-	Emergency stop
47	VAR	iTank1Level	-	INT	0	Level of Tank 1

Continuation of Table 11.

№	Scope	Name	Adress	Data Type	Init	Comment
48	VAR	iTank1MaxLevel	-	INT	1500	Max level of Tank 1
49	VAR	bTank1MaxLevelIndicator	-	BOOL	-	Indicate if Tank 1 level reached max level
50	VAR	iTemperatureSensor	%IW3	INT	-	Temperature sensor input data
51	VAR	tTON0	-	TON	-	Timer on delay for pause after bottle filling
52	VAR	tTON1	-	TON	-	Timer on delay for counting bottle arrival
53	VAR	tTON2	-	TON	-	Timer on delay for pause after box arrival
54	VAR	bValve1	-	BOOL	-	Valve 1 position
55	VAR	iValve1Flow	-	INT	2	Flow of Valve 1
56	VAR	bValve2	-	BOOL	-	Valve 2 position
57	VAR	bValve3	-	BOOL	-	Valve 3 position

Knowing the functions of each variable in a program is critical. That's why this table explains the functions, purposes, and data types of each variable, which will be useful in the following sections of this paper.

6.3. Algorithm description

Process of palletization of bottled water is automated with the control system with PLC as its cornerstone, which combines several components for precision, efficiency and robustness.

The process begins with operator launching the system (presses «Start»), activating the PLC Modicon M241, which controls the whole process, ensuring the integration of sensors, actuators and robot arm.

Boxes with bottled water are transferred via the first conveyor. Strategically placed photoelectric sensor in the beginning of the conveyor belt constantly scans

for in the beginning of the pelleting zone. When the sensor detects the impending approach of the box, it gives a signal to the PLC.

Getting a signal, PLC tracks the box and stops the conveyor the moment a predefined position (setpoint) is reached, initiating the capture. This guarantees that the robot arm begins always begins its cycle from a known and repeatable position.

When box reaches the setpoint, the PLC Modicon M241 gives a signal to the robot-manipulator Yaskawa Motoman MH50-35 to begin the cycle. Robot, with a vacuum gripper OnRobot VGP30, moves to the crate, activating the gripper and lifts the crate. Meanwhile, PLC holds the conveyor in a stopped state (with the usage of TON (Timer On Delay)), to prevent all movement during the capture.

Then the carries the crate to the pellet packaging zone. Manipulator places the crate on a predefined position in accordance with the programming. Modicon M241 tracks the robot's movements, ensuring the completion.

After the crate is released and the grip is canceled, robot returns into the original (safe) position. PLC receives a signal about the successful completion of the cycle and resumes conveyor movement, to give the next crate to the zone of capture, the process repeating past that point.

System also features robust troubleshooting and error monitoring mechanisms. Pallet sensors and safety sensors are synchronized to the PLC. If the sensor doesn't detect the crate at the designated spot, it continues the process until the next cycle. If safety sensors detect interruption in the working zone of the robot, PLC instantly halts the whole process, Preventing staff injuries and damage to the equipment.

The whole process is designed for autonomous automated work, guaranteeing that every crate gets detected, positioned, captured and placed on the pallet with minimal human participation.

6.4. Mnemonic scheme

The following developed mnemonic diagram represents the main stages of the application in our production process, where the operator will have full control over the process and visualization of all the stages of the bottled water production process. The screen interface is logically divided into two functional parts: the left area that shows the visualization of the process or "Control Plant", and the right area with the control panel.

Visualization Area Control Plant: On the left side of the screen, we can see a current, graphical diagram of the whole production line or "Control plant". In this part, the operator observes the status of the main tank (Tank 1), the position of each of the shutoff valves (Valve 1, Valve 2, Valve 3), and how the pumping equipment is operating in real time. An animation of the pipelines illustrates to us the route that water takes, and even trough filtration systems (Carbon/Multi-Stage Filtration), to the bottling unit. Mechanical components are also visualized: the movement of conveyor belts, packaging (Packaging), and even the robotic arm transporting finished crates to the warehouse (Warehouse).

Control and Display Panel: The right side of the screen is dedicated to controls and monitoring. The top section contains the main system start buttons ("START") and emergency stop buttons ("EMERGENCY STOP"), plus the "AUTOMATIC MODE" mode switch, which allows you to choose automatic or manual control.

The "MANUAL CONTROL" block provides for independent control of individual actuators-forced opening of valves, start of a pump (Pump 1), and turning on of a conveyor. A separate block is dedicated to manual robot control, where forward/reverse commands can be issued. A visualization of the entire process, which includes the Control Plant and Control Panel, is shown in Figure 12.

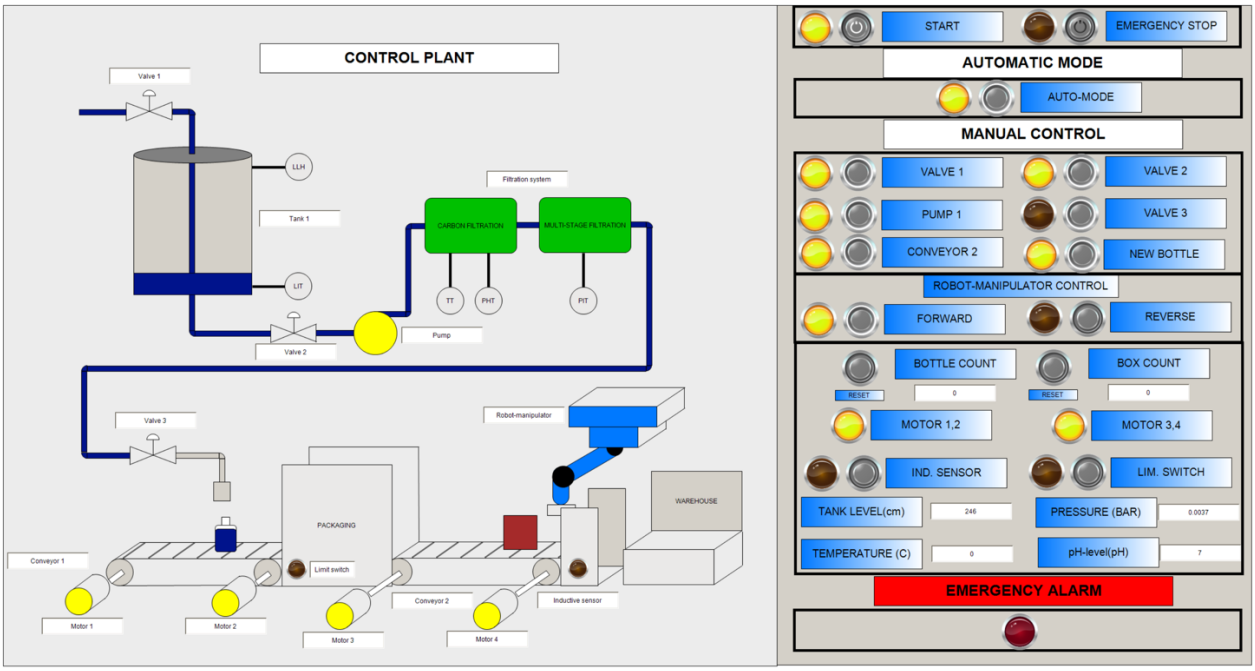

Figure 13 – Mnemonic scheme

Parameter Monitoring: Quality and performance are monitored with digital indicators on the panel. Real-time sensor readings that can be observed by the operator: tank level ("TANK LEVEL"), system pressure ("PRESSURE"), temperature, and pH are displayed. Finished product counters ("BOTTLE COUNT" and "BOX COUNT") are also displayed, featuring reset buttons. Indicator lights-Motor, Ind. Sensor, Lim. Switch--point out the drives status and the operation of the position sensors. The "EMERGENCY ALARM" notification zone is located at the lower section, which lights up in case of an abnormal situation. The main FBD program is listed in Appendices A and B.

6.5 Human Machine Interface (HMI)

A Human-Machine Interface (HMI) connects a person to any machine, device or a system via a display and user-defined interface, allowing backwards-compatible interaction. While the term can be applied to any screen that allows interaction

(tablets, smartphones, some laptops and TVs), term 'HMI' is most commonly used in the context of an industrial process. HMIs can be confused with GUIs (Graphical User Interfaces) but the two follow different functions and expand upon different terms; therefore, the two should not be interchanged. In industrial production process, HMIs can be used to: Display visual data; Track production (in particular, time, trends, sensor showings and displayed values); Monitor machine I/O systems, both analog and discrete.

In the HMI we made, there are several modes: Automatic mode, Manual mode, Forward/Reverse motion control and lamps and numeric displays showing the status of corresponding sensors (Figure 14). HMI gives us an opportunity to start and halt the process by tapping on the buttons and engaging with the interface directly. There is also Emergency Alarm for abrupt halting of the process in case of the safety breach. For auto mode, there are two buttons: start (corresponding to the switch that allows us to start in the first place) and auto mode (automates the entire process, streamlining the operation of conveyor). For manual control, we can manually control the operational flow of the system: we can close or open valves, the pump and conveyors; additionally, we can control the appearance of bottles via the "New bottle" button. Moreover, we can view the pressure, temperature and tank levels being updated real-time by the readings from the sensors.

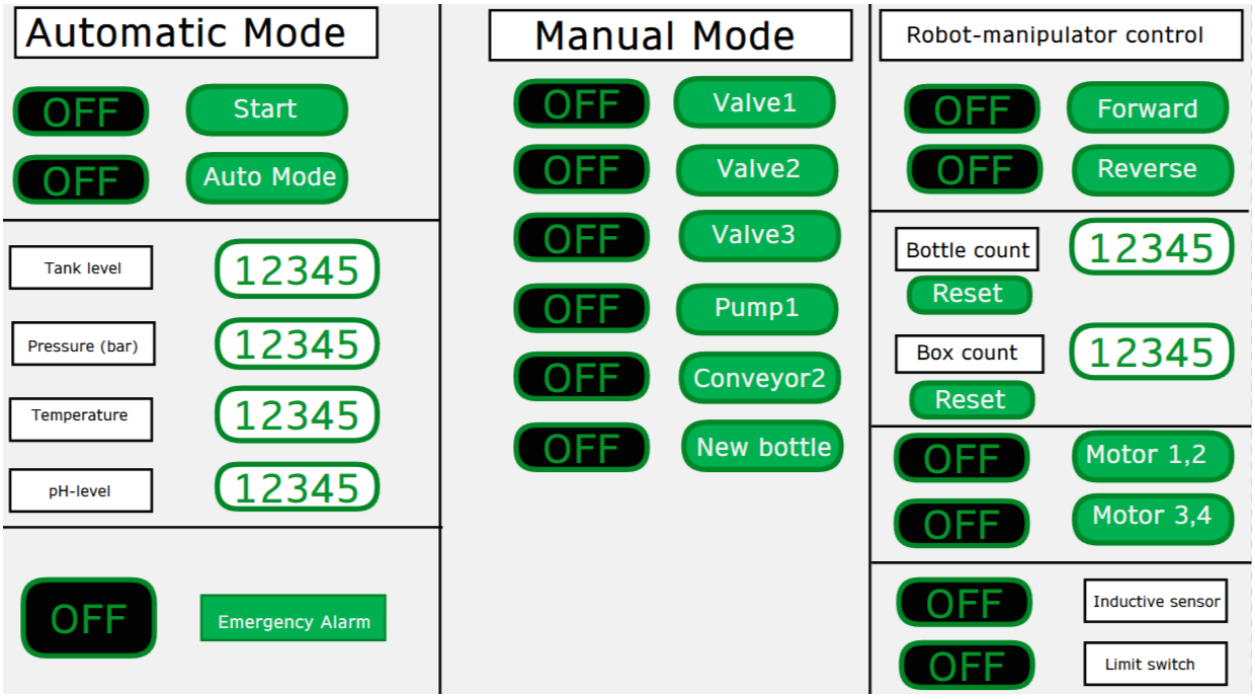

Figure 14 – HMI of the system

Implementing an HMI panel is a crucial step in this project. It enables control of the entire production process through direct access to the control panel at the control plant, eliminating the need for a personal computer.

It also allows for monitoring parameters describing each production stage, preventing critical and hazardous situations. Physical representation of HMI panel is shown in Figure 15.

Figure 15 – physical representation of HMI of the system

The implementation of the HMI on the stand is a very important stage in our project, which allows us to control the entire process through the HMI screen.

CONCLUSION

This course project addressed the complex task of robotizing a bottled water production process. We thoroughly analyzed the entire production cycle, from water treatment to packaging, allowing us to create clear flowcharts and identify critical points requiring automation.

A central element of the project was the informed selection of an industrial manipulator for the palletizing section. A market analysis revealed that the Yaskawa Motoman MH50-35 6-axis robot was the optimal solution. Its 35 kg load capacity provides the necessary safety margin for handling 20 kg crates, even with the weight of the OnRobot VGP30 vacuum gripper. Analysis of load charts confirmed that the robot will operate in a gentle mode, significantly extending its service life and reducing the risk of emergency stops. A work envelope with a radius of 2538 mm allows for flexible organization of the workshop space, handling multiple pallets simultaneously.

Particular attention was paid to the control system during the project. The developed function block diagram (FBD) program for the Schneider Electric TM241CEC24U controller successfully synchronizes all system elements. We implemented the control logic for the ATV320 frequency converter, processed signals from analog pressure and temperature sensors, and implemented emergency protection algorithms. The developed human-machine interface (HMI) provides the operator with complete control over the process, allowing them to monitor valve status, tank levels, and production counters in real time without complex programming.

Despite the high initial investment (CAPEX) associated with the robot and DX200 controller, implementing this system is cost-effective. Automation eliminates human error, guarantees placement accuracy (repeatability of ±0.07 mm), and ensures stable performance around the clock. Given the seasonal demand for water, such scalability and reliability are decisive competitive advantages. Thus, the designed system fully meets the set goals, ensuring the efficiency, safety and technological effectiveness of modern production.

APPENDIX A

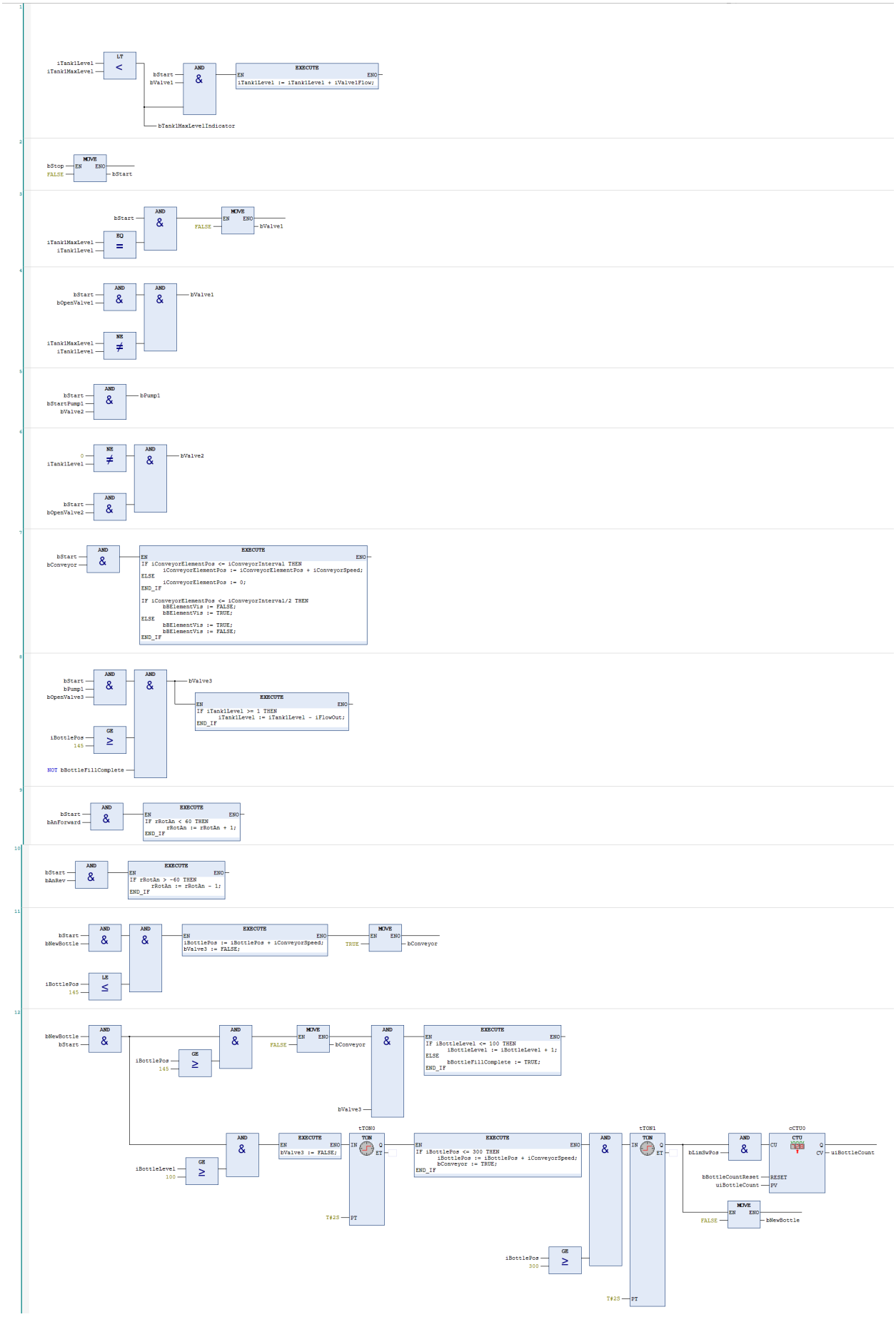
1
iTank1Level
iTank1MaxLevel
L/T
<
bStart
bValve1
AND
&
EXECUTE
EN
ENO
iTank1Level := iTank1Level + iValve1Flow;
bTank1MaxLevelIndicator
2
bStop
FALSE
MOVE
EN
ENO
bStart
3
bStart
AND
&
FALSE
MOVE
EN
ENO
bValve1
iTank1MaxLevel
iTank1Level
EQ
=
4
bStart
bOpenValve1
AND
&
AND
&
bValve1
iTank1MaxLevel
iTank1Level
NE
≠
5
bStart
bStartPump1
bValve2
AND
&
bPump1
6
0
iTank1Level
NE
≠
AND
&
bValve2
bStart
bOpenValve2
AND
&
7
bStart
bConveyor
AND
&
EXECUTE
EN
ENO
IF iConveyorElementPos <= iConveyorInterval THEN
iConveyorElementPos := iConveyorElementPos + iConveyorSpeed;
ELSE
iConveyorElementPos := 0;
END_IF
IF iConveyorElementPos <= iConveyorInterval/2 THEN
bBElementVis := FALSE;
bBElementVis := TRUE;
ELSE
bBElementVis := TRUE;
bBElementVis := FALSE;
END_IF
8
bStart
bPump1
bOpenValve3
AND
&
AND
&
bValve3
EXECUTE
EN
ENO
IF iTank1Level >= 1 THEN
iTank1Level := iTank1Level - iFlowOut;
END_IF
iBottlePos
145
GE
≥
NOT bBottleFillComplete
9
bStart
bAnForward
AND
&
EXECUTE
EN
ENO
IF rRotAn < 60 THEN
rRotAn := rRotAn + 1;
END_IF
10
bStart
bAnRev
AND
&
EXECUTE
EN
ENO
IF rRotAn > -60 THEN
rRotAn := rRotAn - 1;
END_IF
11
bStart
bNewBottle
AND
&
AND
&
EXECUTE
EN
ENO
iBottlePos := iBottlePos + iConveyorSpeed;
bValve3 := FALSE;
TRUE
MOVE
EN
ENO
bConveyor
iBottlePos
145
LE
≤
12
bNewBottle
bStart
AND
&
AND
&
FALSE
MOVE
EN
ENO
bConveyor
AND
&
EXECUTE
EN
ENO
IF iBottleLevel <= 100 THEN
iBottleLevel := iBottleLevel + 1;
ELSE
bBottleFillComplete := TRUE;
END_IF
iBottlePos
145
GE
≥
bValve3
AND
&
EXECUTE
EN
ENO
bValve3 := FALSE;
tTON0
TON
IN
Q
ET
PT
T#2S
EXECUTE
EN
ENO
IF iBottlePos <= 300 THEN
iBottlePos := iBottlePos + iConveyorSpeed;
bConveyor := TRUE;
END_IF
AND
&
tTON1
TON
IN
Q
ET
PT
T#2S
iBottleLevel
100
GE
≥
iBottlePos
300
GE
≥
bLimSwPos
AND
&
cCTU0
CTU
CU
Q
CV
uiBottleCount
bBottleCountReset
uiBottleCount
RESET
PV
MOVE
EN
ENO
FALSE
bNewBottle

APPENDIX B

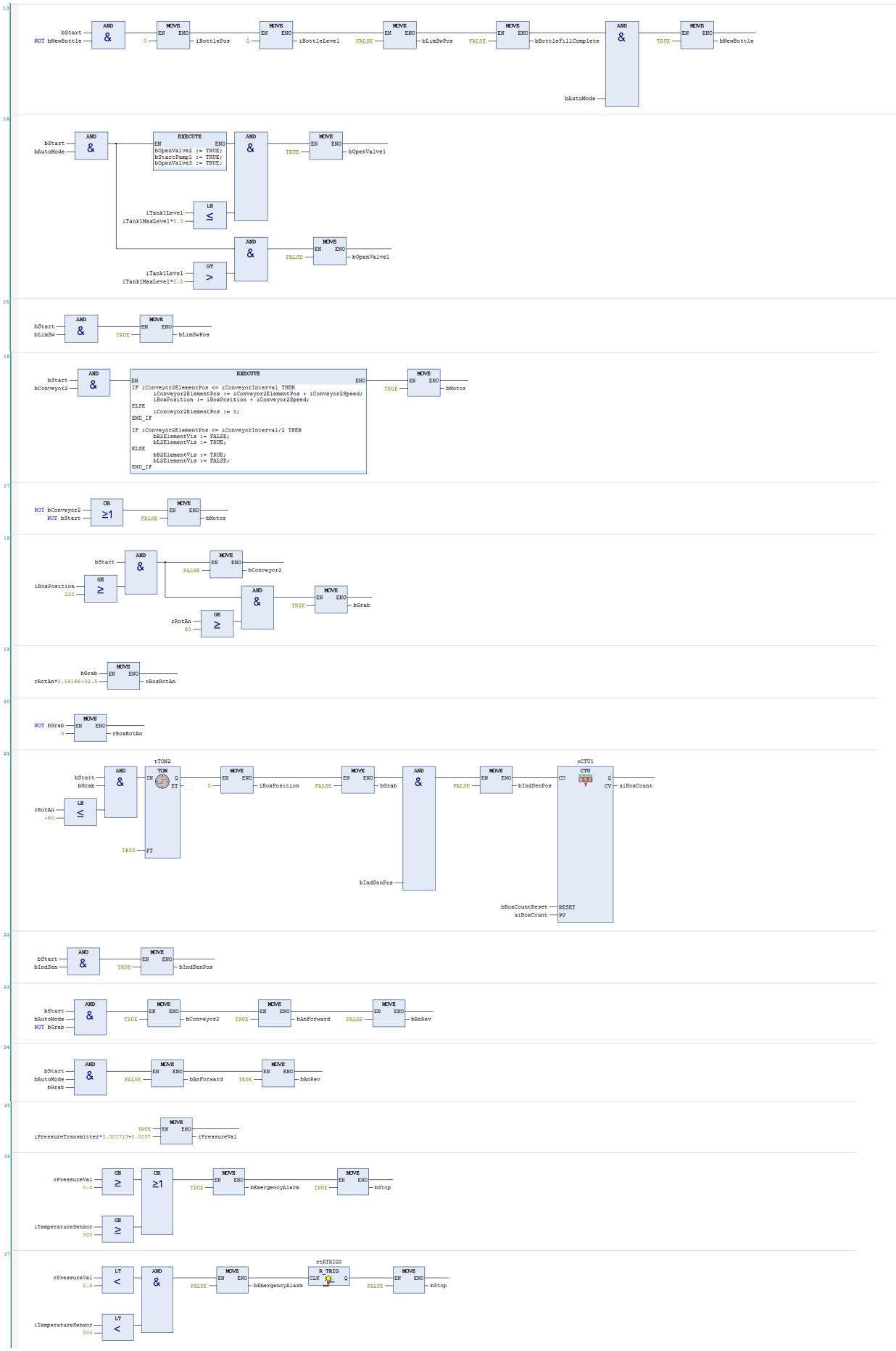
13
bStart
NOT bNewBottle
AND
MOVE
0
iBottlePos
iBottleLevel
FALSE
bLimSwPos
bBottleFillComplete
bAutoMode
TRUE
bNewBottle
14
bAutoMode
EXECUTE
bOpenValve2 := TRUE;
bStartPump1 := TRUE;
bOpenValve3 := TRUE;
bOpenValve1
iTank1Level
iTank1MaxLevel*0.5
LE
GT
15
bLimSw
16
bConveyor2
EXECUTE
IF iConveyor2ElementPos <= iConveyorInterval THEN
iConveyor2ElementPos := iConveyor2ElementPos + iConveyor2Speed;
iBoxPosition := iBoxPosition + iConveyor2Speed;
ELSE
iConveyor2ElementPos := 0;
END_IF
IF iConveyor2ElementPos <= iConveyorInterval/2 THEN
bB2ElementVis := FALSE;
bL2ElementVis := TRUE;
ELSE
bB2ElementVis := TRUE;
bL2ElementVis := FALSE;
END_IF
bMotor
17
NOT bConveyor2
NOT bStart
OR
18
iBoxPosition
220
GE
rRotAn
60
bConveyor2
bGrab
19
rRotAn*0.54166-32.5
rBoxRotAn
20
21
tTON2
TON
IN
Q
ET
PT
T#2S
-60
LE
iBoxPosition
bIndSenPos
cCTU1
CTU
CU
RESET
PV
CV
uiBoxCount
bBoxCountReset
22
23
bAnForward
bAnRev
24
25
iPressureTransmitter*0.001713+0.0037
rPressureVal
26
0.4
300
bEmergencyAlarm
bStop
27
rtRTRIG0
R_TRIG
CLK
LT

REFERENCES

1. Electronical resources: Advances in Food Process Engineering. Novel Processing, Preservation and Decontamination of Foods, 2022. URL. Date of access: 10.11.2025.

2. Electronical resources: Engineering and Food for the 21st Century, 2002. URL. Date of access: 10.11.2025.

3. Electronical resources: Automation, Production Systems, and Computer-Integrated Manufacturing. Fourth edition, 2016. URL. Date of access: 10.11.2025.

4. Electronical resources: Motoman-MH50-35 Instructions. Type: YR-MH00050-A20 (standard specification) YR-MH00050-A21 (with limit switches for s-, l-, u-axes), 2020. URL. Date of access: 10.11.2025.