TECHNICAL DOCUMENTATION

Project

Project	Practice10_Tank_Fazkullin_Otegen
Designer	Fazkullin Farid, Otegen Sultan
Application	<No name>.stu
Software Version	Control Expert V15.0
Creation Date	01.04.2026 12:54:31
Last Modification Date	01.04.2026 13:38:38
Target PLC	BMX P34 2020 03.30CPU 340-20 Modbus Ethernet

This document is the property of Schneider Electric and cannot be reproduced or released without prior authorization.

Contents

1 Title page 1

2 Contents 2

3 Configuration 3

3.1 0 : PLC bus

3.1.1 0 : BMX XBP 0800

3.1.1.1 0 : BMX P34 2020

3.1.1.2 1 : BMX AMI 0800

3.1.1.3 2 : BMX DDM 16025

3.1.1.4 3 : BMX NOC 0401

4 Variables & FB instances 8

5 Application Structure 9

6 Programs 10

6.1 Tasks

6.1.1 MAST

6.1.1.1 Logic

6.1.1.1.1 Practice10_Tank_ST

6.1.1.1.2 Practice10_Tank_LD

6.1.1.1.3 LD_ST_Simulation

7 Operator Screens 14

7.1 Practice10_Tank_ST

7.2 Practice10_Tank_LD

8 Motion 16

9 Cross References 17

Total: 18 pages

This document is the property of Schneider Electric and cannot be reproduced or released without prior authorization.

0 : BMX XBP 0800

Slot	Family	Reference
(P)	Supply	BMX CPS 2000
0	Modicon M340	BMX P34 2020
1	Analog	BMX AMI 0800
2	Discrete	BMX DDM 16025
3	Communication	BMX NOC 0401

This document is the property of Schneider Electric and cannot be reproduced or released without prior authorization.

0.0 : BMX P34 2020

Module identification:

Product reference	: BMX P34 2020	Designation	: CPU 340-20 Modbus Ethernet
Address	: 0.0	Symbol	:

Operating mode

Input run/stop	: No
Memory Protect	: No
Start Auto/Run	: No
Reset MWi	: Yes
Cold Start Only	: No

Data

I/O Vision	: Topological
Number of bits	: 512
Number of words	: 1024
Number of constants	: 256
Number of system bits	: 128
Number of system words	: 168

Data Memory Protect

Setting Data Memory Protect activated : No

Channel 0 :

Application-specific function	: Modbus link		
Channel type	: Integrated channel		
Task	: MAST		
Type	: Slave		
Transmission Speed	: 19200 bits/s	Data	: 8 bits
Stop	: 1 bit	Parity	: Even
Delay between frames	: 2 ms		
Slave Number	: 1		
Physical line	: RS485		

Channel 3 :

Application-specific function : None

This document is the property of Schneider Electric and cannot be reproduced or released without prior authorization.

0.1 : BMX AMI 0800

Module identification:

Product reference	: BMX AMI 0800	Designation	: Ana 8 U/I In non Isolated High Speed
Address	: 0.1	Symbol	:

Common parameters

Cycle	: Normal
I/O Vision	: Topological

Channel parameter

Channel	Address	Symbol	Range	Scale
0	%IW0.1.0.0		+/- 10 V	%..
1	%IW0.1.1.0		+/- 10 V	%..
2	%IW0.1.2.0		+/- 10 V	%..
3	%IW0.1.3.0		+/- 10 V	%..
4	%IW0.1.4.0		+/- 10 V	%..
5	%IW0.1.5.0		+/- 10 V	%..
6	%IW0.1.6.0		+/- 10 V	%..
7	%IW0.1.7.0		+/- 10 V	%..

Channel	Min	Max	Filtering	Task	Used	Underflow	Active	Overflow	Active
0	-10000	10000	0	MAST	Yes	-11000	Yes	11000	Yes
1	-10000	10000	0	MAST	Yes	-11000	Yes	11000	Yes
2	-10000	10000	0	MAST	Yes	-11000	Yes	11000	Yes
3	-10000	10000	0	MAST	Yes	-11000	Yes	11000	Yes
4	-10000	10000	0	MAST	Yes	-11000	Yes	11000	Yes
5	-10000	10000	0	MAST	Yes	-11000	Yes	11000	Yes
6	-10000	10000	0	MAST	Yes	-11000	Yes	11000	Yes
7	-10000	10000	0	MAST	Yes	-11000	Yes	11000	Yes

This document is the property of Schneider Electric and cannot be reproduced or released without prior authorization.

0.2 : BMX DDM 16025

Module identification:

Product reference	: BMX DDM 16025	Designation	: Dig 8I 24 Vdc 8Q Relays
Address	: 0.2	Symbol	:

Common parameters [0-7]

Supply monitoring	: Active
Task	: MAST
I/O Vision	: Topological

Input channel parameters [0-7]

Channel	Address	Symbol
0	%I0.2.0.0	
1	%I0.2.1.0	
2	%I0.2.2.0	
3	%I0.2.3.0	
4	%I0.2.4.0	
5	%I0.2.5.0	
6	%I0.2.6.0	
7	%I0.2.7.0	

Common parameters [16-23]

Task	: MAST
Fallback Mode	: Fallback
I/O Vision	: Topological

Output channel parameters [16-23]

Channel	Address	Symbol	Fall. Value
0	%Q0.2.16.0		0
1	%Q0.2.17.0		0
2	%Q0.2.18.0		0
3	%Q0.2.19.0		0
4	%Q0.2.20.0		0
5	%Q0.2.21.0		0
6	%Q0.2.22.0		0
7	%Q0.2.23.0		0

This document is the property of Schneider Electric and cannot be reproduced or released without prior authorization.

0.3 : BMX NOC 0401

Module identification:

Product reference	: BMX NOC 0401	Designation	: Ethernet 4 Port 10/100 RJ45
Address	: 0.3	Symbol	:

Channel 0 :

Application-specific function	: Ethernet
Task	: MAST

Project Name M_NOC0401

Input Area:
Input %MW Index: 0 Input real size: 32 - Input max size: 16

Output Area:
Output %MW Index: 16 Output real size: 32 - Output max size: 16

This document is the property of Schneider Electric and cannot be reproduced or released without prior authorization.

Variables & FB instances

DINT

Name	Const	Address	Comment	Value	Used	GD
TANK_Level_LD	NO				9	NO
TANK_Level_ST	NO				9	NO

EBOOL

Name	Const	Address	Comment	Value	Used	GD
CR1_LD	NO				3	NO
CR1_ST	NO				4	NO
CR2_LD	NO				3	NO
CR2_ST	NO				4	NO
Empty_LD	NO				2	NO
Empty_ST	NO				3	NO
Empty_tank_sensor_LD	NO				3	NO
Empty_tank_sensor_ST	NO				4	NO
Fill_LD	NO				2	NO
Fill_ST	NO				3	NO
Full_tank_sensor_LD	NO				3	NO
Full_tank_sensor_ST	NO				4	NO
s1	NO				3	NO
Solenoid_A_LD	NO				4	NO
Solenoid_A_ST	NO				5	NO
Solenoid_B_LD	NO				4	NO
Solenoid_B_ST	NO				5	NO
stop_LD	NO				2	NO
stop_ST	NO				2	NO

This document is the property of Schneider Electric and cannot be reproduced or released without prior authorization.

Application Structure

STRUCTURAL VIEW

SECTION	VALIDATION CONDITION	SECTION COMMENT	MODULE	LANGUAGE
Practice10_Tank_ST				ST
Practice10_Tank_LD				LD
LD_ST_Simulation				ST

CALL TREE

```
Programs
└─ Tasks
    └─ MAST
        └─ Logic
            ├─ Practice10_Tank_ST
            ├─ Practice10_Tank_LD
            └─ LD_ST_Simulation
```


This document is the property of Schneider Electric and cannot be reproduced or released without prior authorization.

MAST

Specific properties

Configuration	Cyclic
Task period configuration	0
Watchdog time configuration	250

This document is the property of Schneider Electric and cannot be reproduced or released without prior authorization.

Practice10_Tank_ST : [MAST]

```
1|      10|      20|      30|      40|      50|      60|      70|      80|      90|      100|      110|

s1 := %s5;
IF stop_ST THEN
        Fill_ST := FALSE;
        Full_tank_sensor_ST := FALSE;
        CR1_ST := FALSE;
        Solenoid_A_ST := FALSE;
        Empty_ST :=FALSE;
        Empty_tank_sensor_ST := FALSE;
        CR2_ST := FALSE;
        Solenoid_B_ST := FALSE;
END_IF;
Full_tank_sensor_ST := TANK_Level_ST = 100;
Empty_tank_sensor_ST := TANK_Level_ST = 0;
IF RE(s1) THEN
        IF Solenoid_A_ST AND TANK_Level_ST < 100 THEN
                TANK_Level_ST := TANK_Level_ST + 1;
        END_IF;
        IF Solenoid_B_ST AND TANK_Level_ST > 0 THEN
                TANK_Level_ST := TANK_Level_ST - 1;
        END_IF;
END_IF;
CR1_ST := (Fill_ST OR CR1_ST) AND NOT(Full_tank_sensor_ST);
Solenoid_A_ST := CR1_ST;
CR2_ST := (Empty_ST OR CR2_ST) AND NOT(Empty_tank_sensor_ST);
Solenoid_B_ST := CR2_ST;
```


This document is the property of Schneider Electric and cannot be reproduced or released without prior authorization.

Practice10_Tank_LD : [MAST]

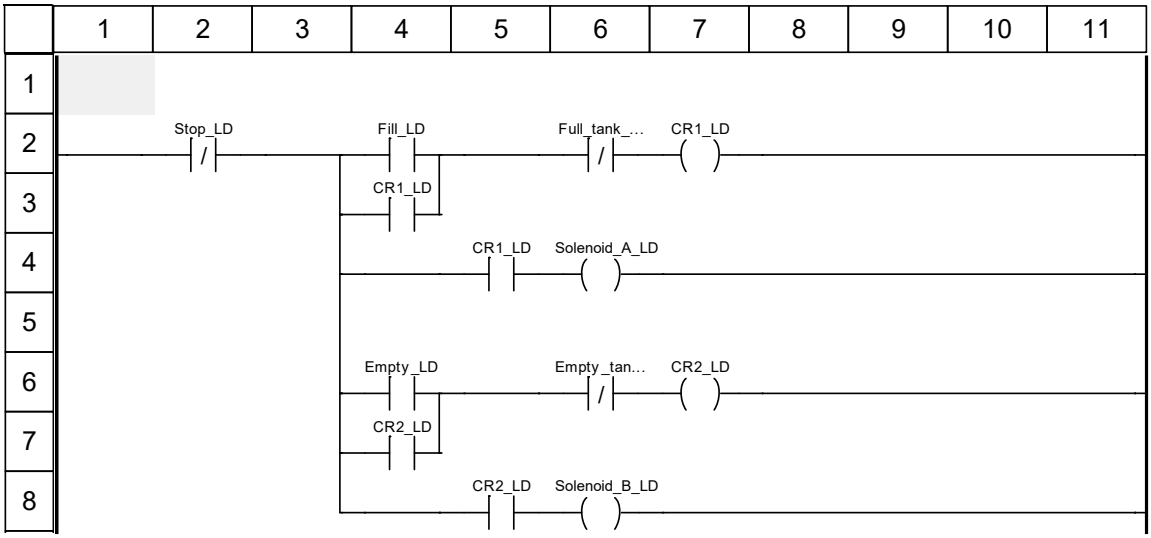

Truncated labels:

Label	Position(s)
Empty_tank_sensor_LD	(6, 6)
Full_tank_sensor_LD	(6, 2)

This document is the property of Schneider Electric and cannot be reproduced or released without prior authorization.

LD_ST_Simulation : [MAST]

```
1|      10|      20|      30|      40|      50|      60|      70|      80|      90|      100|      110|

IF RE(s1) THEN
        IF Solenoid_A_LD AND TANK_Level_LD < 100 THEN
                TANK_Level_LD := TANK_Level_LD + 1;
        END_IF;
        IF Solenoid_B_LD AND TANK_Level_LD > 0 THEN
                TANK_Level_LD := TANK_Level_LD - 1;
        END_IF;
END_IF;
Full_tank_sensor_LD := TANK_Level_LD = 100;
Empty_tank_sensor_LD := TANK_Level_LD = 0;
```


This document is the property of Schneider Electric and cannot be reproduced or released without prior authorization.

Practice10_Tank_ST

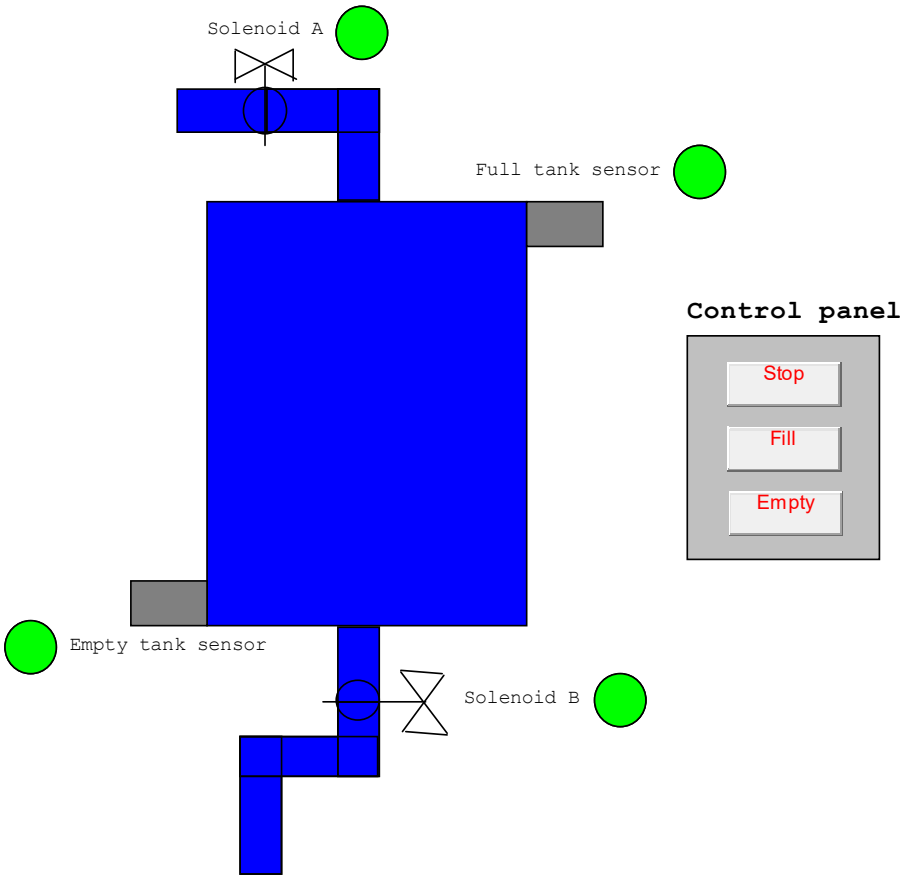

This document is the property of Schneider Electric and cannot be reproduced or released without prior authorization.

Practice10_Tank_LD

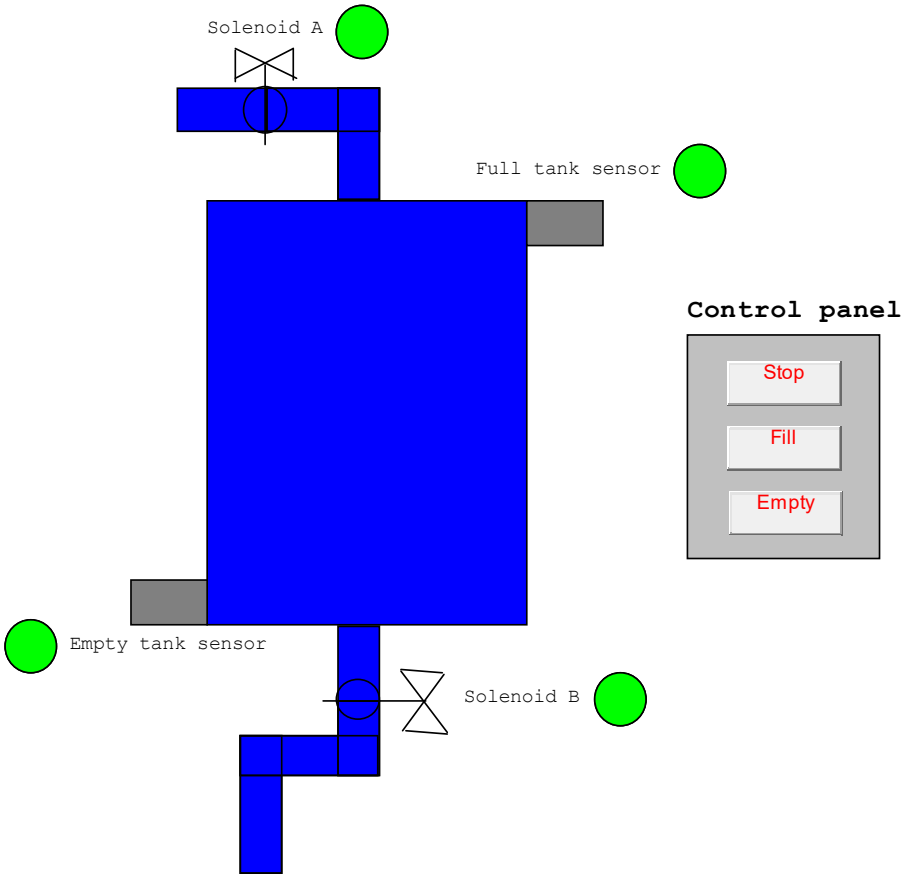

This document is the property of Schneider Electric and cannot be reproduced or released without prior authorization.

Motion axis

This document is the property of Schneider Electric and cannot be reproduced or released without prior authorization.

Cross References

Application:

Addresses

Object	Referred into	Location	Usage
%S5	Practice10_Tank_ST : [MAST]	(l: 1, c: 7)	R

Variables or FB instances

Object	Referred into	Location	Usage
CR1_LD	Practice10_Tank_LD : [MAST]	(l: 2, c: 7)	W
		(l: 4, c: 5)	R
		(l: 3, c: 4)	R
CR1_ST	Practice10_Tank_ST : [MAST]	(l: 5, c: 2)	W
		(l: 23, c: 18)	R
		(l: 22, c: 23)	R
		(l: 22, c: 1)	W
CR2_LD	Practice10_Tank_LD : [MAST]	(l: 6, c: 7)	W
		(l: 7, c: 4)	R
		(l: 8, c: 5)	R
CR2_ST	Practice10_Tank_ST : [MAST]	(l: 9, c: 2)	W
		(l: 25, c: 18)	R
		(l: 24, c: 24)	R
		(l: 24, c: 1)	W
Empty_LD	Practice10_Tank_LD : [MAST]	(l: 6, c: 4)	R
	<Screen>Practice10_Tank_LD		R/W (x1)
Empty_ST	<Screen>Practice10_Tank_ST		R/W (x1)
	Practice10_Tank_ST : [MAST]	(l: 7, c: 2)	W
		(l: 24, c: 12)	R
Empty_tank_sensor_LD	LD_ST_Simulation : [MAST]	(l: 10, c: 1)	W
	Practice10_Tank_LD : [MAST]	(l: 6, c: 6)	R
	<Screen>Practice10_Tank_LD		R (x1)
Empty_tank_sensor_ST	<Screen>Practice10_Tank_ST		R (x1)
	Practice10_Tank_ST : [MAST]	(l: 8, c: 2)	W
		(l: 24, c: 40)	R
		(l: 13, c: 1)	W
Fill_LD	Practice10_Tank_LD : [MAST]	(l: 2, c: 4)	R
	<Screen>Practice10_Tank_LD		R/W (x1)
Fill_ST	<Screen>Practice10_Tank_ST		R/W (x1)
	Practice10_Tank_ST : [MAST]	(l: 3, c: 2)	W
		(l: 22, c: 12)	R
Full_tank_sensor_LD	LD_ST_Simulation : [MAST]	(l: 9, c: 1)	W
	Practice10_Tank_LD : [MAST]	(l: 2, c: 6)	R
	<Screen>Practice10_Tank_LD		R (x1)
Full_tank_sensor_ST	<Screen>Practice10_Tank_ST		R (x1)
			UNDEF (x1)
	Practice10_Tank_ST : [MAST]	(l: 4, c: 2)	W
		(l: 22, c: 39)	R
		(l: 12, c: 1)	W
s1	LD_ST_Simulation : [MAST]	(l: 1, c: 7)	R
	Practice10_Tank_ST : [MAST]	(l: 1, c: 1)	W
		(l: 14, c: 7)	R
Solenoid_A_LD	LD_ST_Simulation : [MAST]	(l: 2, c: 5)	R
	Practice10_Tank_LD : [MAST]	(l: 4, c: 6)	W
	<Screen>Practice10_Tank_LD		R (x2)
Solenoid_A_ST	<Screen>Practice10_Tank_ST		R (x2)

This document is the property of Schneider Electric and cannot be reproduced or released without prior authorization.

Cross References

Object	Referred into	Location	Usage
			UNDEF (x2)
	Practice10_Tank_ST : [MAST]	(l: 6, c: 2)	W
		(l: 15, c: 5)	R
		(l: 23, c: 1)	W
Solenoid_B_LD	LD_ST_Simulation : [MAST]	(l: 5, c: 5)	R
	Practice10_Tank_LD : [MAST]	(l: 8, c: 6)	W
	<Screen>Practice10_Tank_LD		R (x2)
Solenoid_B_ST	<Screen>Practice10_Tank_ST		R (x2)
	Practice10_Tank_ST : [MAST]	(l: 10, c: 2)	W
		(l: 18, c: 5)	R
		(l: 25, c: 1)	W
stop_LD	Practice10_Tank_LD : [MAST]	(l: 2, c: 2)	R
	<Screen>Practice10_Tank_LD		R/W (x1)
stop_ST	<Screen>Practice10_Tank_ST		R/W (x1)
			UNDEF (x2)
	Practice10_Tank_ST : [MAST]	(l: 2, c: 4)	R
TANK_Level_LD	LD_ST_Simulation : [MAST]	(l: 2, c: 23)	R
		(l: 3, c: 20)	R
		(l: 3, c: 3)	W
		(l: 5, c: 23)	R
		(l: 6, c: 20)	R
		(l: 6, c: 3)	W
		(l: 9, c: 24)	R
		(l: 10, c: 25)	R
	<Screen>Practice10_Tank_LD		R (x1)
TANK_Level_ST	<Screen>Practice10_Tank_ST		R (x1)
	Practice10_Tank_ST : [MAST]	(l: 19, c: 20)	R
		(l: 19, c: 3)	W
		(l: 16, c: 20)	R
		(l: 16, c: 3)	W
		(l: 15, c: 23)	R
		(l: 18, c: 23)	R
		(l: 12, c: 24)	R
		(l: 13, c: 25)	R

EF objects

Object	Referred into	Location	Usage
re	LD_ST_Simulation : [MAST]	(l: 1, c: 4)	FC
	Practice10_Tank_ST : [MAST]	(l: 14, c: 4)	FC

This document is the property of Schneider Electric and cannot be reproduced or released without prior authorization.