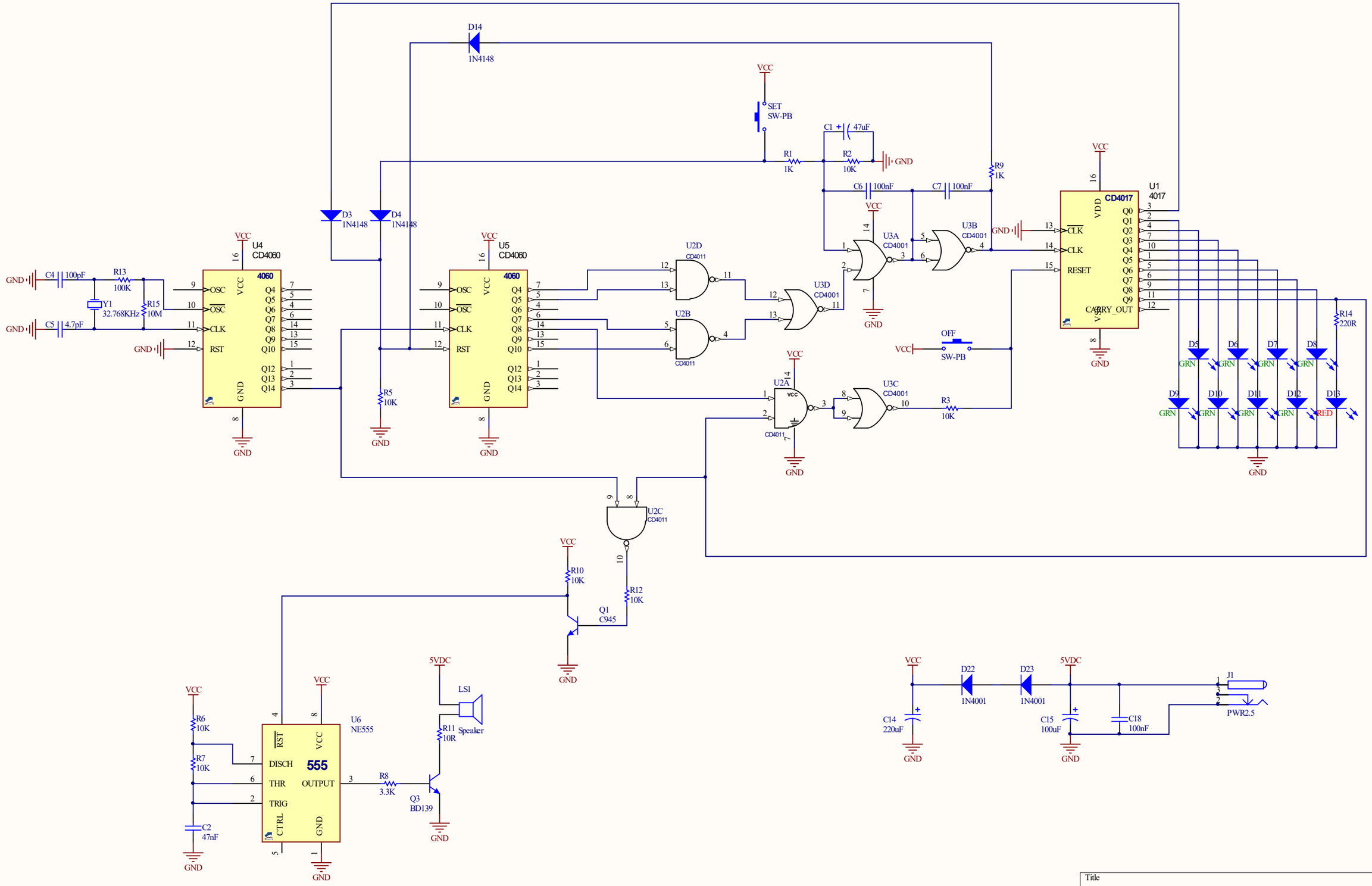

Title		
Size A3	Number	Revision
Date: 6/11/2021		Sheet of
File: D:\My Important Files\..\KitchenTimerFullDig.SchDoc		Drawn By: