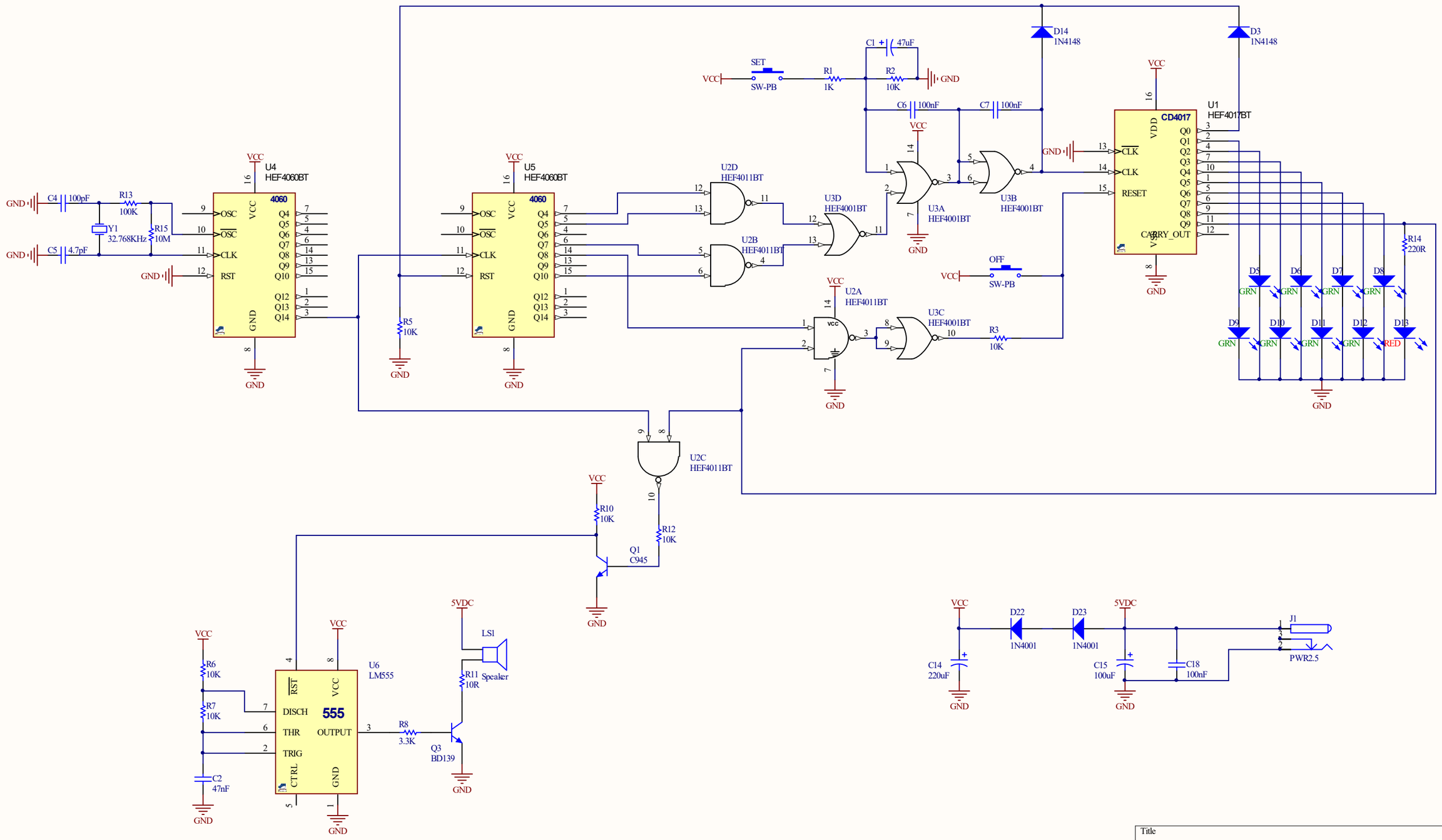

Title		
Size A3	Number	Revision
Date: 6/12/2021	Sheet of	
File: D:\My Important Files\..\KitchenTimerFullDig.SchDoc	Drawn By:	