POLAR COORDINATES

BLAKE FARMAN

Lafayette College

Name: Solutions

1. Plot each of the following points in the plane, then convert them to Cartesian coordinates.

(a) $(2, 5\pi/6)$, (b) $(1, -2\pi/3)$, (c) $(-1, 5\pi/4)$

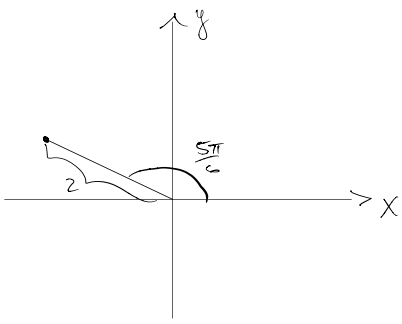

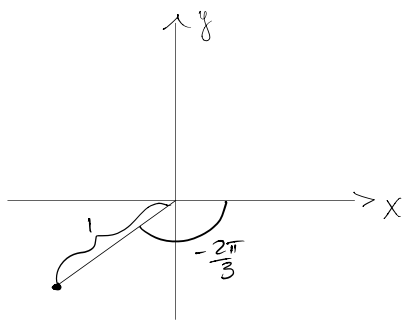

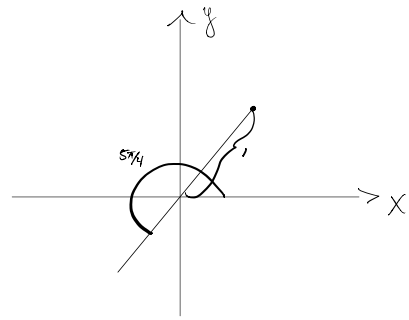

$$x = 2\cos\left(\frac{5\pi}{6}\right) = 2\left(-\frac{\sqrt{3}}{2}\right) = -\sqrt{3}$$

$$y = 2\sin\left(\frac{5\pi}{6}\right) = 2\left(\frac{1}{2}\right) = 1$$

$$x = \cos\left(-\frac{2\pi}{3}\right) = \cos\left(\frac{2\pi}{3}\right) = -\frac{1}{2}$$

$$y = \sin\left(-\frac{2\pi}{3}\right) = -\sin\left(\frac{2\pi}{3}\right) = -\frac{\sqrt{3}}{2}$$

$$x = -\cos\left(\frac{5\pi}{4}\right) = -\left(-\frac{\sqrt{2}}{2}\right) = \frac{\sqrt{2}}{2}$$

$$y = -\sin\left(\frac{5\pi}{4}\right) = -\left(-\frac{\sqrt{2}}{2}\right) = \frac{\sqrt{2}}{2}.$$

Date: March 21, 2019.

2. Sketch $r = 2\cos(4\theta)$.

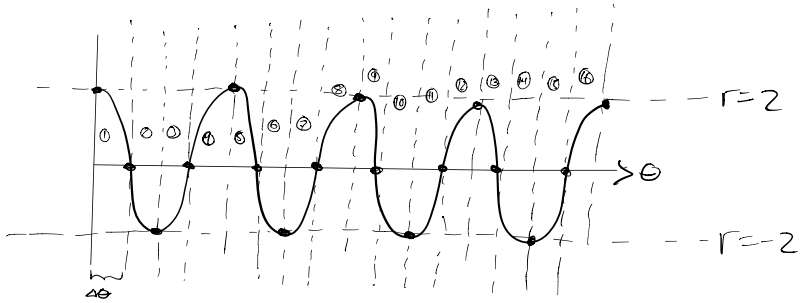

$\Delta\theta = \frac{2\pi}{16} = \frac{\pi}{8}$

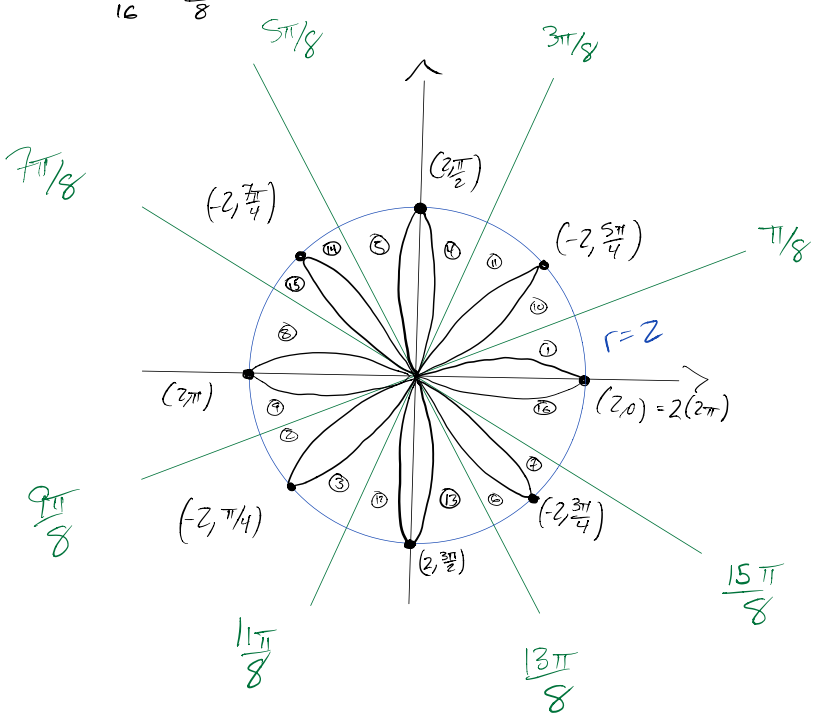

$r=0$ when

$\theta = \frac{\pi}{8}, \frac{3\pi}{8}, \frac{5\pi}{8}, \frac{7\pi}{8}, \frac{9\pi}{8},$

$\frac{11\pi}{8}, \frac{13\pi}{8}, \frac{15\pi}{8}$

$r=2$ when

$\theta = 0, \frac{4\pi}{8} = \frac{\pi}{2}, \frac{8\pi}{8} = \pi,$

$\frac{12\pi}{8} = \frac{3\pi}{2}, \frac{16\pi}{8} = 2\pi$

$r=-2$ when

$\theta = \frac{2\pi}{8} = \frac{\pi}{4}, \frac{6\pi}{8} = \frac{3\pi}{4},$

$\frac{10\pi}{8} = \frac{5\pi}{4}, \frac{14\pi}{8} = \frac{7\pi}{4}$

Find the slope of the tangent line to the given polar curve at the point specified by the value of θ.

3. $r = 2\cos(\theta)$, $\theta = \pi/3$

$$x = r\cos(\theta) = (2\cos(\theta))\cos(\theta) = 2\cos^2(\theta)$$

$$y = r\sin(\theta) = 2\cos(\theta)\sin(\theta)$$

$$\frac{dy}{dx} = \frac{\frac{dy}{d\theta}}{\frac{dx}{d\theta}} = \frac{2(\cos^2(\theta) - \sin^2(\theta))}{-4\cos(\theta)\sin(\theta)} = \frac{\sin^2(\theta) - \cos^2(\theta)}{2\cos(\theta)\sin(\theta)}$$

$$\left.\frac{dy}{dx}\right|_{\theta=\pi/3} = \frac{\frac{3}{4} - \frac{1}{4}}{2\left(\frac{1}{2}\right)\left(\frac{\sqrt{3}}{2}\right)} = \frac{\frac{1}{2}}{\frac{\sqrt{3}}{2}} = \frac{1}{2}\left(\frac{2}{\sqrt{3}}\right) = \boxed{\frac{1}{\sqrt{3}}} \quad \text{or} \quad \boxed{\frac{\sqrt{3}}{3}}$$

4. $r = \cos(\theta/3)$, $\theta = \pi$.

$$x = \cos\left(\frac{\theta}{3}\right)\cos(\theta)$$

$$\frac{dx}{dt} = -\frac{1}{3}\sin\left(\frac{\theta}{3}\right)\cos(\theta) - \cos\left(\frac{\theta}{3}\right)\sin(\theta)$$

$$y = \cos\left(\frac{\theta}{3}\right)\sin(\theta)$$

$$\frac{dy}{dt} = -\frac{1}{3}\sin\left(\frac{\theta}{3}\right)\sin(\theta) + \cos\left(\frac{\theta}{3}\right)\cos(\theta)$$

$$\frac{dy}{dx} = \frac{-\frac{1}{3}\sin\left(\frac{\theta}{3}\right)\sin(\theta) + \cos\left(\frac{\theta}{3}\right)\cos(\theta)}{-\frac{1}{3}\sin\left(\frac{\theta}{3}\right)\cos(\theta) - \cos\left(\frac{\theta}{3}\right)\sin(\theta)}$$

$$\left.\frac{dy}{dx}\right|_{\theta=\pi} = \frac{-\frac{1}{3}\sin(\pi/3)\cancelto{0}{\sin(\pi)} + \cos\left(\frac{\pi}{3}\right)\cos(\pi)}{-\frac{1}{3}\sin\left(\frac{\pi}{3}\right)\cos(\pi) - \cos\left(\frac{\pi}{3}\right)\cancelto{0}{\sin(\pi)}} \quad \cos(\pi) = -1$$

$$= \frac{-\cos(\pi/3)}{\frac{1}{3}\sin\left(\frac{\pi}{3}\right)}$$

$$= \frac{-\frac{1}{2}}{\frac{1}{3}\left(\frac{\sqrt{3}}{2}\right)} = \left(-\frac{1}{2}\right)\left(\frac{6}{\sqrt{3}}\right) = \frac{-3}{\sqrt{3}} = \frac{-\sqrt{3}^2}{\sqrt{3}} = \boxed{-\sqrt{3}}$$

5. Use the formula

$$A = \int_a^b \frac{1}{2} r^2 \, \mathrm{d}\theta$$

to compute the area of one leaf of the four-leaved rose $r = \cos(2\theta)$.

By symmetry, we could choose any leaf, so let's choose the top one:

$r = \cos(2\theta), \quad \pi/4 \le \theta \le \frac{3\pi}{4}$

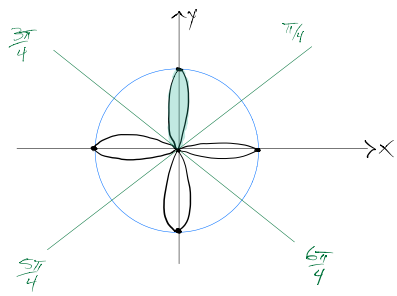

$$\frac{1}{2} r^2 = \frac{1}{2}\cos^2(2\theta) = \frac{1}{2}\left(\frac{1+\cos(4\theta)}{2}\right) = \frac{1}{4} + \frac{1}{4}\cos(4\theta)$$

$$A = \int_{\pi/4}^{3\pi/4} \left(\frac{1}{4} + \frac{1}{4}\cos(4\theta)\right) d\theta = \int_{\pi/4}^{3\pi/4} \frac{1}{4} d\theta + \int_{\pi/4}^{3\pi/4} \frac{1}{4}\cos(4\theta) d\theta$$

$u = 4\theta \Rightarrow \frac{1}{4} du = d\theta$

$$= \frac{1}{4}\int_{\pi/4}^{3\pi/4} d\theta + \int_{\pi}^{3\pi} \cos(u) du$$

$$= \frac{1}{4}\theta \Big|_{\pi/4}^{3\pi/4} + \sin(u)\Big|_{\pi}^{3\pi}$$

$$= \frac{1}{4}\left(\frac{3\pi}{4} - \frac{\pi}{4}\right) + \left(\sin(3\pi) - \sin(\pi)\right)$$

$$= \frac{1}{4}\left(\frac{2\pi}{4}\right) + 0$$

$$= \boxed{\frac{\pi}{8}}$$

6. Use the formula

$$L = \int_a^b \sqrt{r^2 + \left(\frac{\mathrm{d}r}{\mathrm{d}\theta}\right)^2} \, \mathrm{d}\theta$$

to set up an integral that computes the length of the cardioid $r = 1 + \sin(\theta)$.

$$r^2 + \left(\frac{dr}{d\theta}\right)^2 = \left(1+\sin(\theta)\right)^2 + \left(\cos(\theta)\right)^2$$

$$= 1 + 2\sin(\theta) + \sin^2(\theta) + \cos^2(\theta)$$

$$= 2 + 2\sin(\theta)$$

$$\boxed{L = \int_0^{2\pi} \sqrt{2+2\sin(\theta)} \, d\theta}$$

If you want to evaluate the integral, use

$$\sqrt{(2+2\sin(\theta))(2-2\sin(\theta))} = \sqrt{4-4\sin^2(\theta)} = \sqrt{4(1-\sin^2(\theta))} = \sqrt{4\cos^2(\theta)} = 2\,|\cos(\theta)|$$

to rewrite

$$\int_0^{2\pi} \sqrt{2+2\sin(\theta)}\, d\theta = \int_0^{2\pi} \sqrt{2+2\sin(\theta)}\, \frac{\sqrt{2-2\sin(\theta)}}{\sqrt{2-2\sin(\theta)}}\, d\theta$$

$$= \int_0^{2\pi} \frac{2\,|\cos(\theta)|}{\sqrt{2-2\sin(\theta)}}\, d\theta$$

$$= \int_0^{\pi/2} \frac{2\cos(\theta)}{\sqrt{2-2\sin(\theta)}}\, d\theta + \int_{\pi/2}^{\frac{3\pi}{2}} \frac{2(-\cos(\theta))}{\sqrt{2-2\sin(\theta)}}\, d\theta + \int_{\frac{3\pi}{2}}^{2\pi} \frac{2\cos(\theta)}{\sqrt{2-2\sin(\theta)}}\, d\theta$$

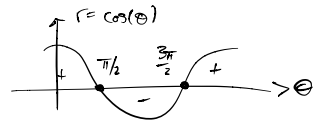

$u = 2-2\sin(\theta)$

$du = -2\cos(\theta)\,d\theta$

$\Rightarrow -du = 2\cos(\theta)\,d\theta$

$u(0) = u(2\pi) = 2$

$u(\pi/2) = 2-2(1) = 0$

$u(\frac{3\pi}{2}) = 2-2(-1) = 2+2 = 4$

$$= \int_2^0 \frac{-du}{\sqrt{u}} + \int_0^4 \frac{du}{\sqrt{u}} + \int_4^2 \frac{-du}{\sqrt{u}}$$

$$= -\int_0^2 \frac{-du}{\sqrt{u}} + \int_0^4 \frac{du}{\sqrt{u}} - \int_2^4 \frac{-du}{\sqrt{u}}$$

$$= \int_0^2 \frac{du}{\sqrt{u}} + \int_0^4 \frac{du}{\sqrt{u}} + \int_2^4 \frac{du}{\sqrt{u}}$$

$$= \int_0^2 \frac{du}{\sqrt{u}} + \int_2^4 \frac{du}{\sqrt{u}} + \int_0^4 \frac{du}{\sqrt{u}}$$

$$= \int_0^4 \frac{du}{\sqrt{u}} + \int_0^4 \frac{du}{\sqrt{u}}$$

$$= 2\int_0^4 \frac{du}{\sqrt{u}}$$

Because $\frac{1}{\sqrt{u}}$ has an asymptote at $u=0$, this is an improper integral:

$$\int_0^{2\pi} \sqrt{2+2\sin(\theta)}\, d\theta = 2 \lim_{t\to 0^+} \int_t^4 u^{-1/2}\, du$$

$$= 2 \lim_{t\to 0^+} 2\sqrt{u}\,\Big|_t^4$$

$$= 2 \lim_{t\to 0^+} \left(2\sqrt{4} - 2\sqrt{t}\right)$$

$$= 2\left(2(2) - 2(0)\right)$$

$$= 2(4) = \boxed{8}$$