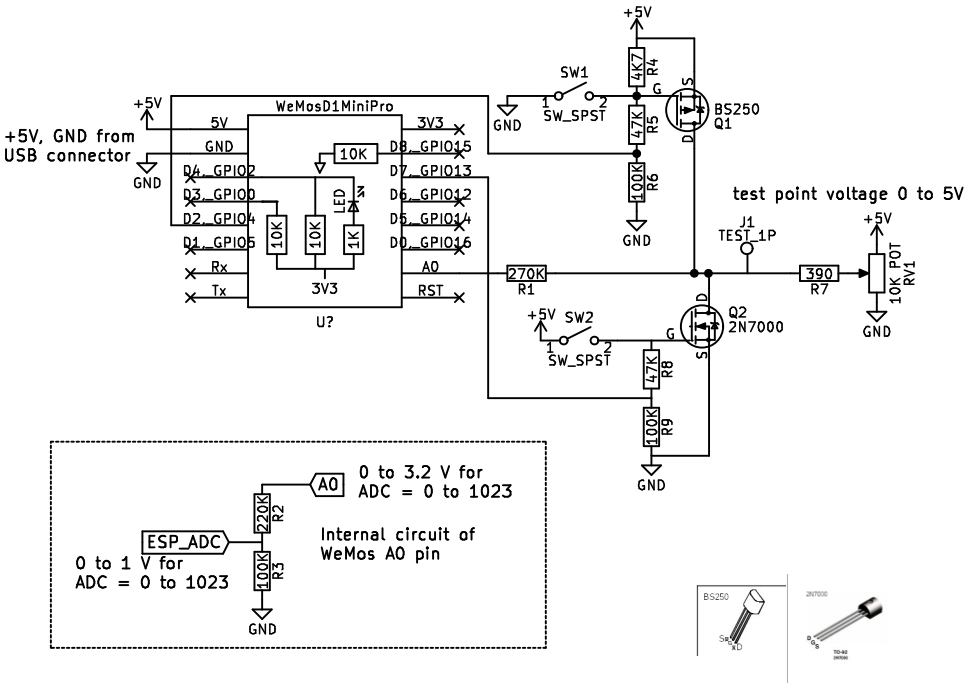

Table of measurement range and step size
for various values of R1

R1	Range(V)	Step(mV)
0	3.2	3.13
10K	3.3	3.22
100K	4.2	4.10
180K	5.0	4.88
270K	5.9	5.86
470K	7.9	7.71
680K	10	9.77
880K	12	11.72
1.2M	15.2	14.84
1.8M	21.2	20.70
2.2M	25.2	24.61
2.7M	30.2	29.49
3.3M	36.2	35.35
3.9M	42.2	41.21

Sheet: /
File: VoltMeterWemos.sch

Title: VoltMeterWemos

Size: A4	Date: 26 October 2017	Rev:
KiCad E.D.A. kicad 4.0.7		Id: 1/1