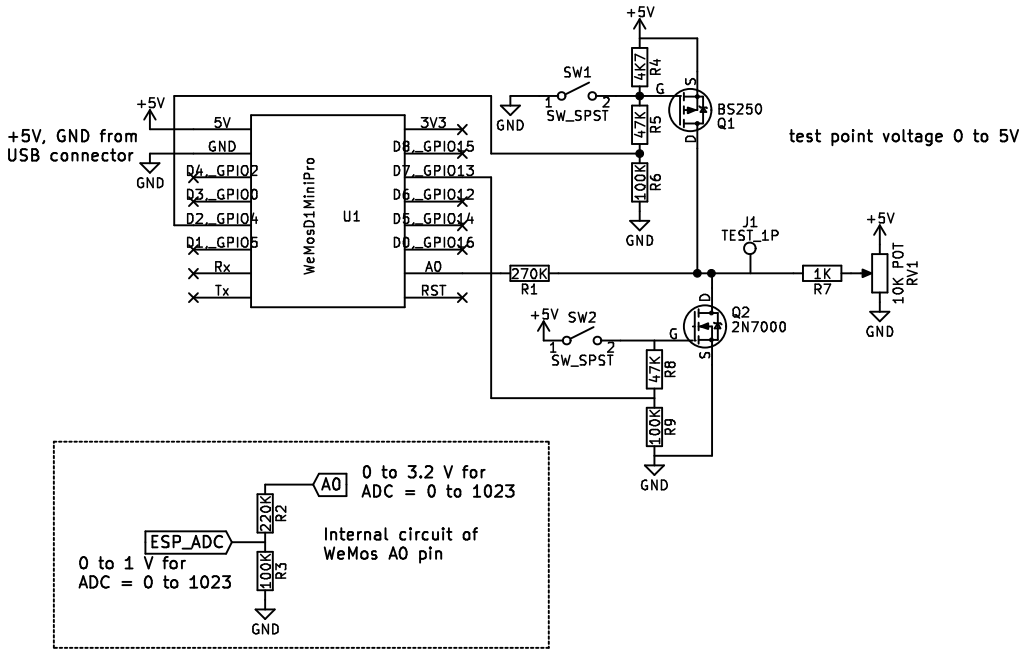

Sheet: /
File: VoltMeterWemos.sch

Title: VoltMeterWemos

Size: A4	Date: 26 October 2017	Rev:
KiCad E.D.A. kicad 4.0.7		Id: 1/1