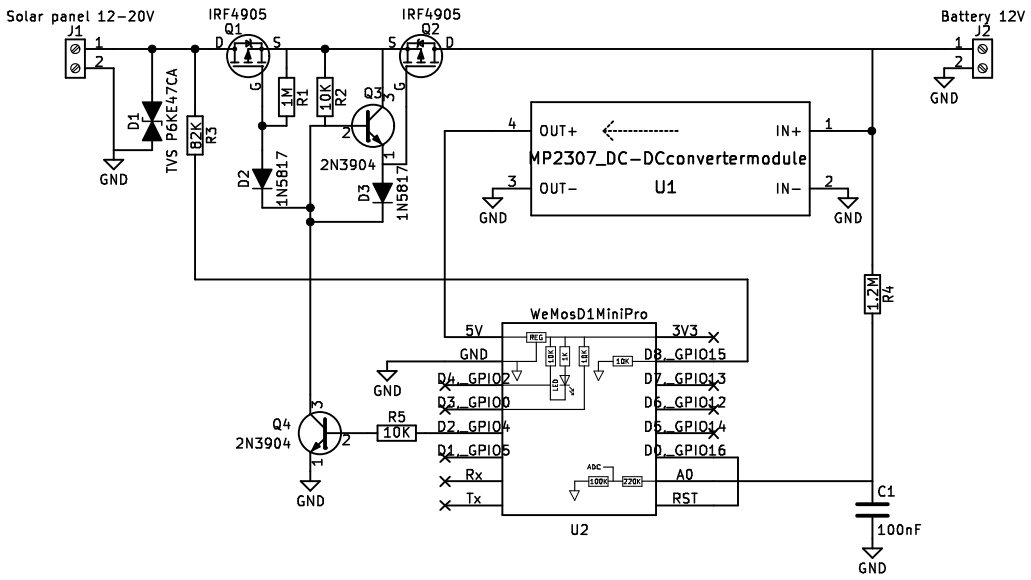

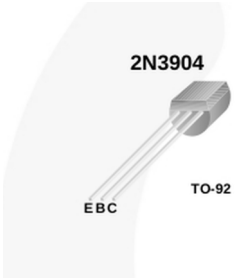

farmerkeith

Sheet: /
File: WiFiMiniSolarChargerV2.sch

Title: WiFiMiniSolarChargerV2

Size: A4	Date: 2017-12-01	**Rev:**
KiCad E.D.A. kicad 4.0.7		Id: 1/1