NCE N-Channel Enhancement Mode Power MOSFET

Description

The NCE30H29D uses advanced trench technology and design to provide excellent $R_{DS(ON)}$ with low gate charge. It can be used in a wide variety of applications.

General Features

- V_{DS} =30V ,I_D =290A
  $R_{DS(ON)}$ < 1.8mΩ @ V_{GS}=10V
- High density cell design for ultra low Rdson
- Fully characterized avalanche voltage and current
- Good stability and uniformity with high E_{AS}
- Excellent package for good heat dissipation
- Special process technology for high ESD capability

Application

- Power switching application
- Hard switched and high frequency circuits
- Uninterruptible power supply

100% UIS TESTED!

100% ΔVds TESTED!

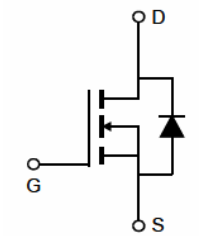

Schematic diagram

Marking and pin assignment

TO-263-2L top view

Package Marking and Ordering Information

Device Marking	Device	Device Package	Reel Size	Tape width	Quantity
NCE30H29D	NCE30H29D	TO-263-2L	-	-	-

Absolute Maximum Ratings (T_A=25℃unless otherwise noted)

Parameter	Symbol	Limit	Unit
Drain-Source Voltage	V_{DS}	30	V
Gate-Source Voltage	V_{GS}	±20	V
Drain Current-Continuous (Silicon Limited)	I_D	290	A
Drain Current-Continuous(T_C=100℃) (Silicon Limited)	I_D (100℃)	205	A
Pulsed Drain Current	I_{DM}	1160	A
Maximum Power Dissipation	P_D	270	W
Derating factor		1.8	W/℃
Single pulse avalanche energy (Note 5)	E_{AS}	1600	mJ
Operating Junction and Storage Temperature Range	T_J,T_{STG}	-55 To 175	℃

Thermal Characteristic

Thermal Resistance,Junction-to-Case(Note 2)	$R_{\theta JC}$	0.56	℃/W

Electrical Characteristics (T_A=25℃unless otherwise noted)

Parameter	Symbol	Condition	Min	Typ	Max	Unit
Off Characteristics						
Drain-Source Breakdown Voltage	BV_{DSS}	V_{GS}=0V I_D=250μA	30		-	V
Zero Gate Voltage Drain Current	I_{DSS}	V_{DS}=30V,V_{GS}=0V	-	-	1	μA
Gate-Body Leakage Current	I_{GSS}	V_{GS}=±20V,V_{DS}=0V	-	-	±100	nA
On Characteristics (Note 3)						
Gate Threshold Voltage	$V_{GS(th)}$	V_{DS}=V_{GS},I_D=250μA	1.0	1.6	2.5	V
Drain-Source On-State Resistance	$R_{DS(ON)}$	V_{GS}=10V, I_D=160A	-	1.4	1.8	mΩ
Forward Transconductance	g_{FS}	V_{DS}=5V,I_D=160A	50	-	-	S
Dynamic Characteristics (Note4)						
Input Capacitance	C_{Iss}	V_{DS}=15V,V_{GS}=0V, F=1.0MHz	-	13873	-	PF
Output Capacitance	C_{oss}		-	1672	-	PF
Reverse Transfer Capacitance	C_{rss}		-	1508	-	PF
Switching Characteristics (Note 4)						
Turn-on Delay Time	$t_{d(on)}$	V_{DD}=15V,R_L=15Ω, R_G=2.5Ω,V_{GS}=10V	-	18	-	nS
Turn-on Rise Time	t_r		-	200	-	nS
Turn-Off Delay Time	$t_{d(off)}$		-	85	-	nS
Turn-Off Fall Time	t_f		-	125	-	nS
Total Gate Charge	Q_g	I_D=160A,V_{DD}=15V,V_{GS}=10V	-	231	-	nC
Gate-Source Charge	Q_{gs}		-	27.5	-	nC
Gate-Drain Charge	Q_{gd}		-	55	-	nC
Drain-Source Diode Characteristics						
Diode Forward Voltage (Note 3)	V_{SD}	V_{GS}=0V,I_S=160A	-	0.85	1.2	V
Diode Forward Current (Note 2)	I_S		-	-	320	A
Reverse Recovery Time	t_{rr}	TJ = 25°C, I_F = 160A di/dt = 100A/μs(Note3)	-	70		nS
Reverse Recovery Charge	Qrr		-	180		nC
Forward Turn-On Time	t_{on}	Intrinsic turn-on time is negligible (turn-on is dominated by LS+LD)				

Notes:

1. Repetitive Rating: Pulse width limited by maximum junction temperature.
2. Surface Mounted on FR4 Board, t ≤ 10 sec.
3. Pulse Test: Pulse Width ≤ 300μs, Duty Cycle ≤ 2%.
4. Guaranteed by design, not subject to production
5. EAS condition：Tj=25℃,V_{DD}=15V,V_G=10V,L=0.5mH,Rg=25Ω

Test circuit

1）E_{AS} test Circuits

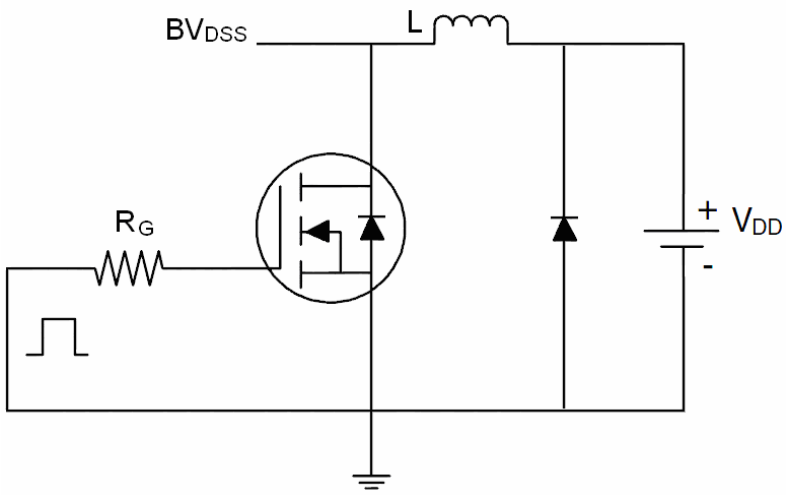

2）Gate charge test Circuit:

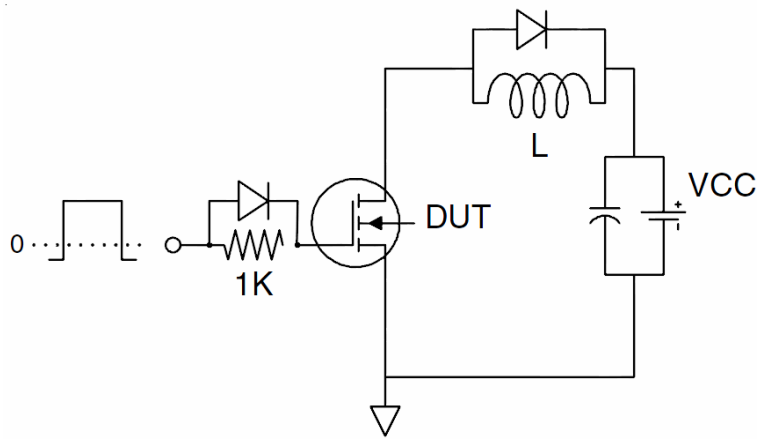

3）Switch Time Test Circuit:

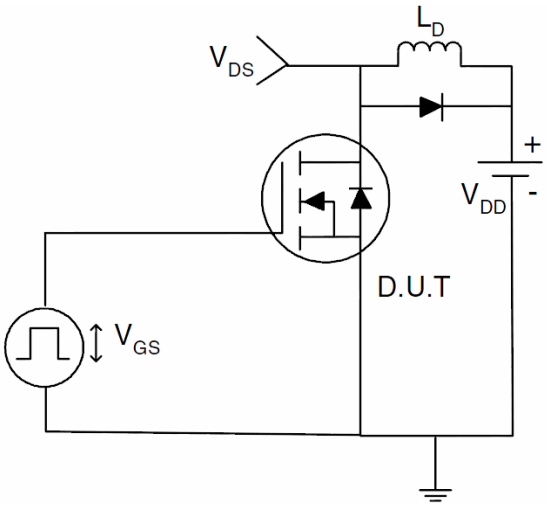

Typical Electrical and Thermal Characteristics (Curves)

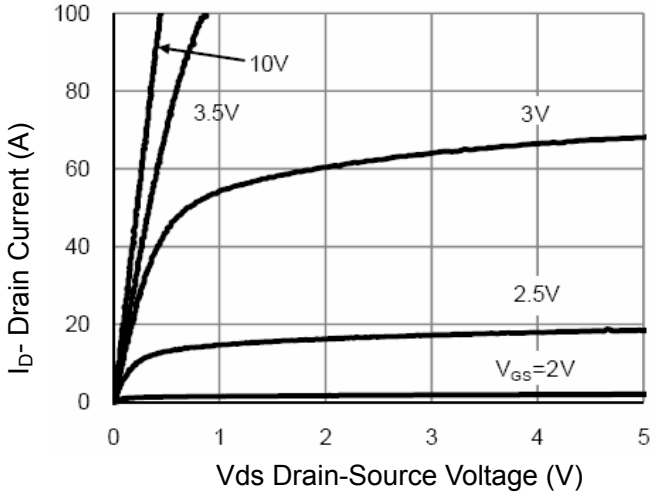

Figure 1 Output Characteristics

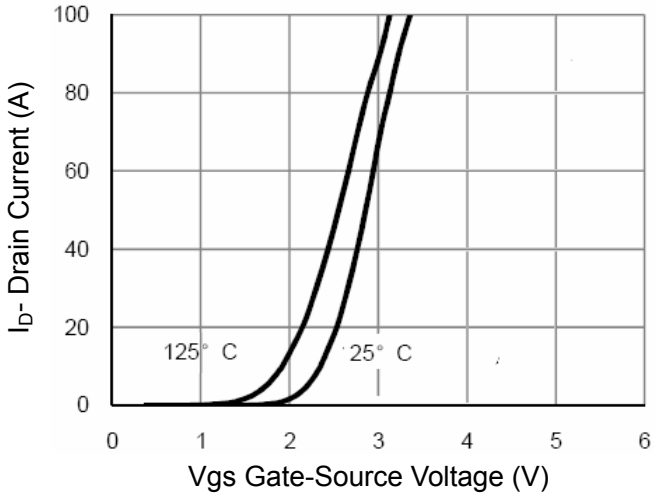

Figure 2 Transfer Characteristics

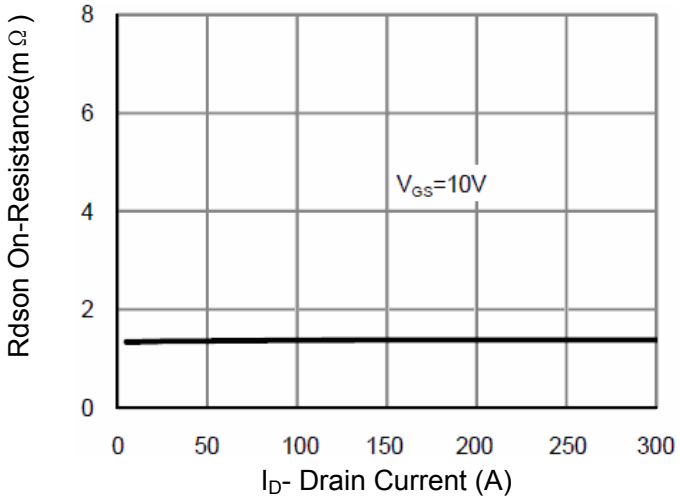

Figure 3 Rdson- Drain Current

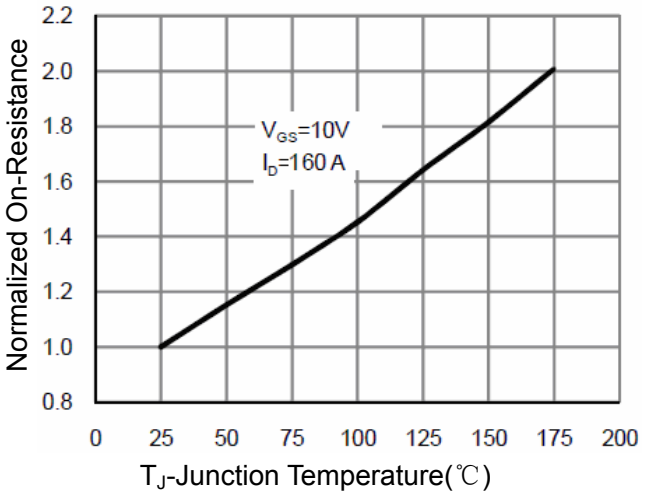

Figure 4 Rdson-JunctionTemperature

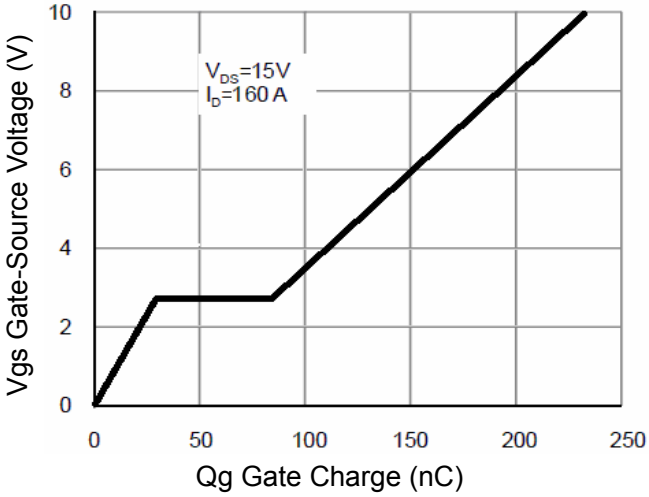

Figure 5 Gate Charge

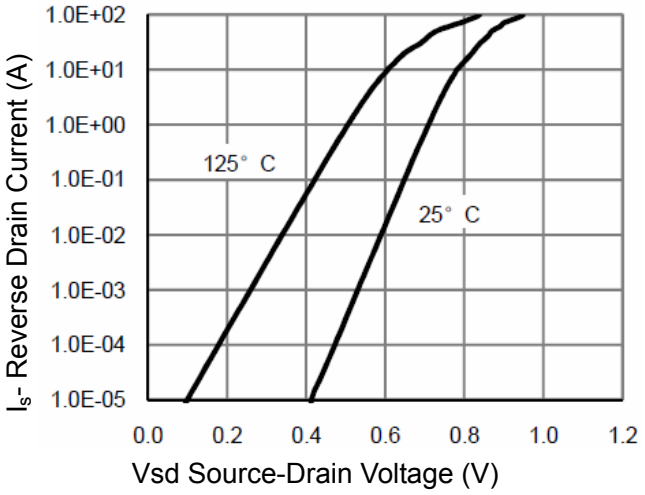

Figure 6 Source- Drain Diode Forward

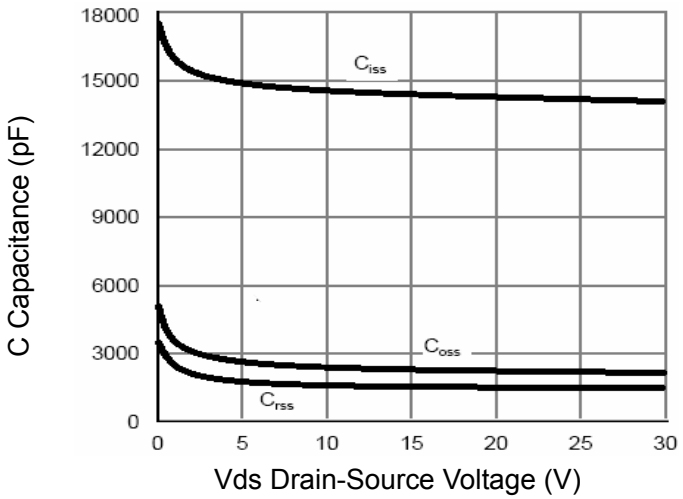

Figure 7 Capacitance vs Vds

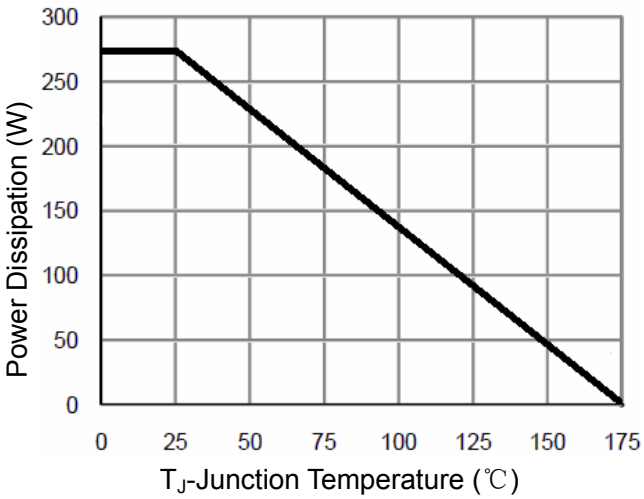

Figure 9 Power De-rating

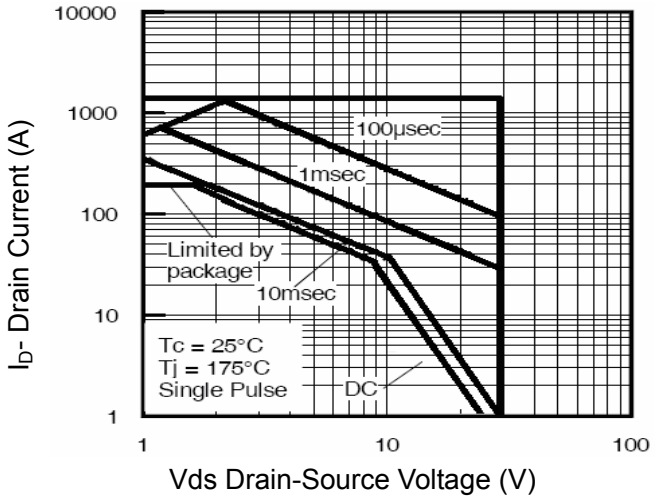

Figure 8 Safe Operation Area

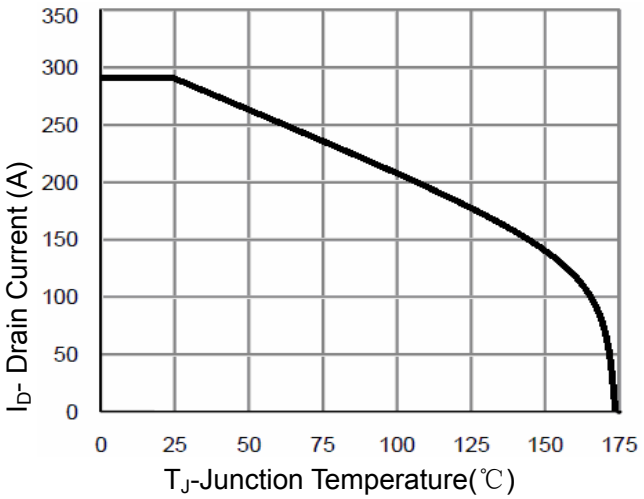

Figure 10 Current vs Junction Temperature

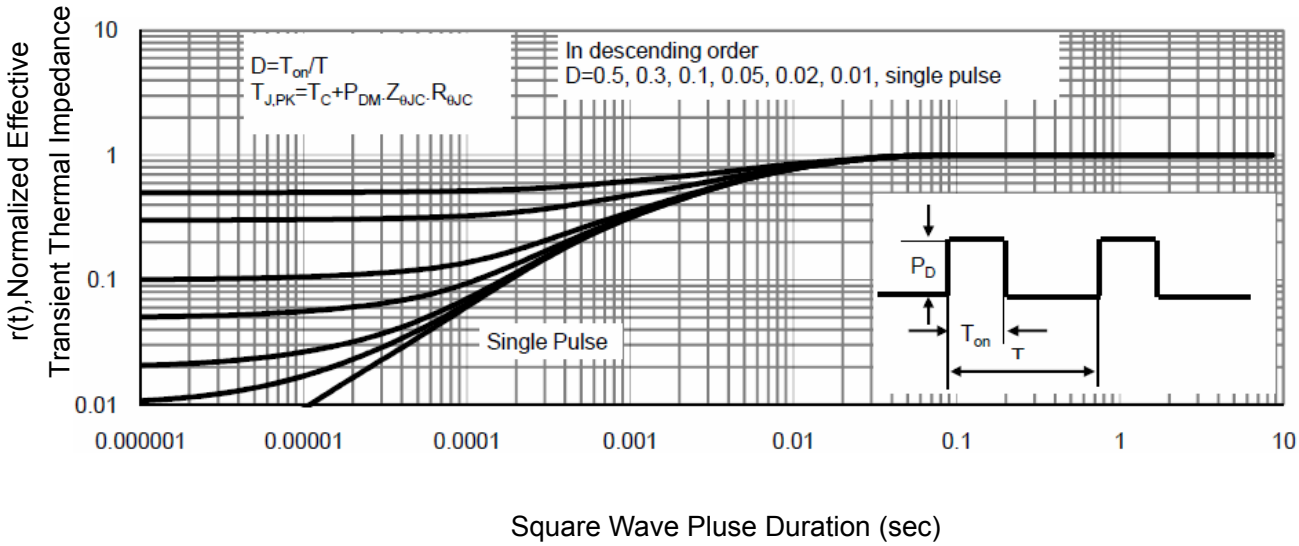

Figure 11 Normalized Maximum Transient Thermal Impedance

TO-263-2L Package Information

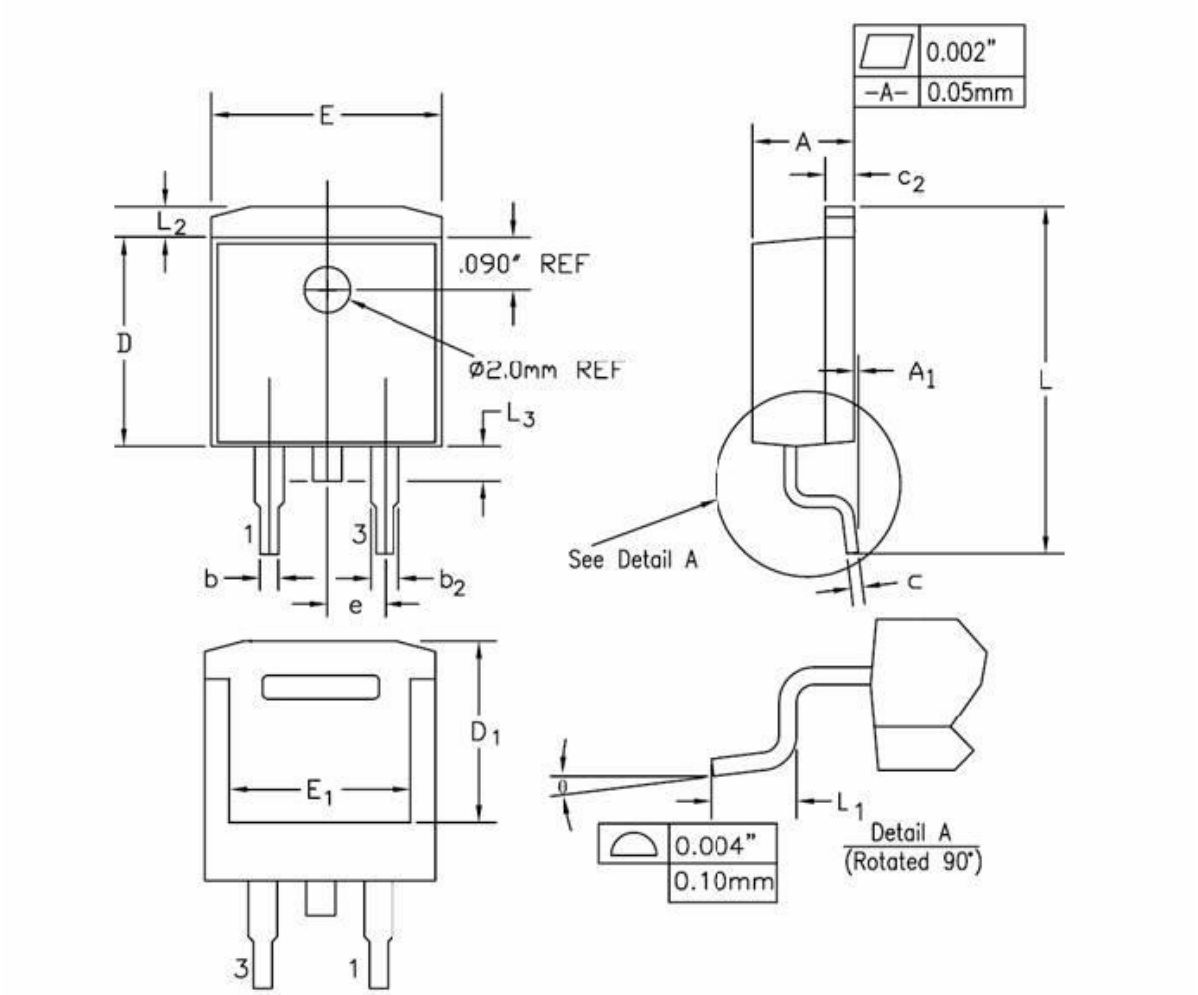

SYMBOL	INCHES		MILLIMETERS		NOTES
	MIN	MAX	MIN	MAX	
A	0.170	0.180	4.32	4.57	
A1	-	0.010	-	0.25	
b	0.028	0.037	0.71	0.94	
b2	0.045	0.055	1.15	1.40	
c	0.018	0.024	0.46	0.61	
c2	0.048	0.055	1.22	1.40	
D	0.350	0.370	8.89	9.40	
D1	0.315	0.324	8.01	8.23	
E	0.395	0.405	10.04	10.28	
E1	0.310	0.318	7.88	8.08	
e	0.100 BSC.		2.54 BSC.		
L	0.580	0.620	14.73	15.75	
L1	0.090	0.110	2.29	2.79	
L2	0.045	0.055	1.15	1.39	
L3	0.050	0.070	1.27	1.77	
θ	0°	8°	0°	8°	

Attention:

- Any and all NCE power products described or contained herein do not have specifications that can handle applications that require extremely high levels of reliability, such as life-support systems, aircraft's control systems, or other applications whose failure can be reasonably expected to result in serious physical and/or material damage. Consult with your NCE power representative nearest you before using any NCE power products described or contained herein in such applications.
- NCE power assumes no responsibility for equipment failures that result from using products at values that exceed, even momentarily, rated values (such as maximum ratings, operating condition ranges, or other parameters) listed in products specifications of any and all NCE power products described or contained herein.
- Specifications of any and all NCE power products described or contained herein stipulate the performance, characteristics, and functions of the described products in the independent state, and are not guarantees of the performance, characteristics, and functions of the described products as mounted in the customer's products or equipment. To verify symptoms and states that cannot be evaluated in an independent device, the customer should always evaluate and test devices mounted in the customer's products or equipment.
- NCE power Semiconductor CO.,LTD. strives to supply high-quality high-reliability products. However, any and all semiconductor products fail with some probability. It is possible that these probabilistic failures could give rise to accidents or events that could endanger human lives, that could give rise to smoke or fire, or that could cause damage to other property. When designing equipment, adopt safety measures so that these kinds of accidents or events cannot occur. Such measures include but are not limited to protective circuits and error prevention circuits for safe design, redundant design, and structural design.
- In the event that any or all NCE power products(including technical data, services) described or contained herein are controlled under any of applicable local export control laws and regulations, such products must not be exported without obtaining the export license from the authorities concerned in accordance with the above law.
- No part of this publication may be reproduced or transmitted in any form or by any means, electronic or mechanical, including photocopying and recording, or any information storage or retrieval system, or otherwise, without the prior written permission of NCE power Semiconductor CO.,LTD.
- Information (including circuit diagrams and circuit parameters) herein is for example only ; it is not guaranteed for volume production. NCE power believes information herein is accurate and reliable, but no guarantees are made or implied regarding its use or any infringements of intellectual property rights or other rights of third parties.
- Any and all information described or contained herein are subject to change without notice due to product/technology improvement, etc. When designing equipment, refer to the "Delivery Specification" for the NCE power product that you intend to use.
- This catalog provides information as of Sep.2010. Specifications and information herein are subject to change without notice.