EE 350 – Electronics II

Spring 2025/26

LAB 1

Cascode Amplifiers and Current Mirrors

Submitted by: Ömer Faruk AVCI

Student ID: S034113

Date of Submission: 02.04.2026

2.1)

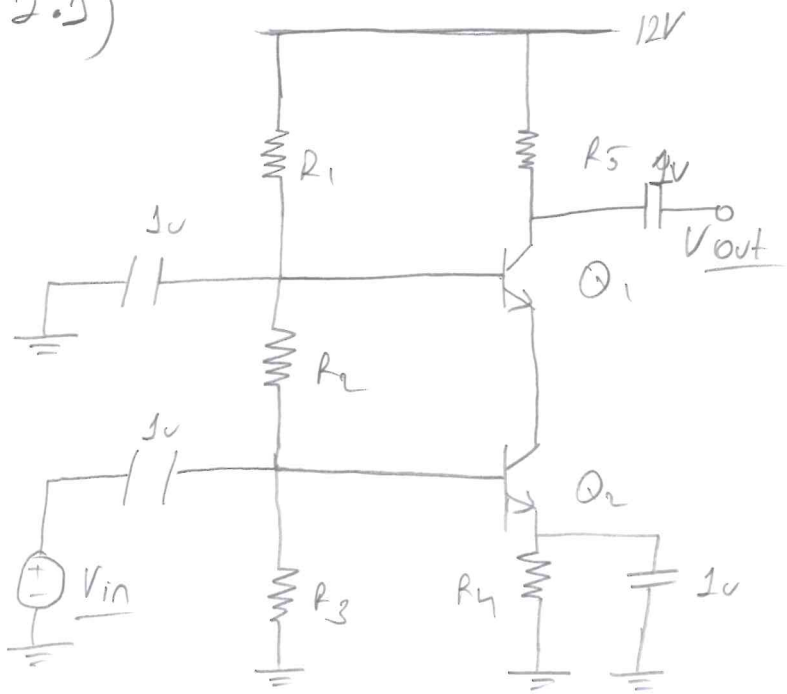

(theorathical calculations)

$R_4 = 300$ (given)

$I_c = 1\,mA$.

$VQ_{2E} = 300 \cdot 1\,mA = 0.3V$

$V_{Q_{2B}} = 0.3 + 0.7 = 1V$

$V_{Q_{2C}} = 1 + \underbrace{0.3}_{\text{choosen by me}} = 1.3V$

$V_{Q_1E} = V_{Q_2C}$

$$\boxed{V_{Q1B} = \underbrace{V_{BE}}_{0.7V} + \underbrace{V_{Q1E}}_{1.3V} = 2V}$$

$$g_m = \frac{I_c}{V_T} = \frac{1mA}{26mV} \approx 38.5\,mS$$

$A_V \approx g_m R_5 \longrightarrow 38.5mS R_5 = 200$ $\boxed{R_5 \approx 5195\Omega}$

$\boxed{R_5 = 5600 \text{ for standart}}$

$V_{Q1c} = 12 - I_c R_5 = 12 - 1mA \cdot 5600 = \boxed{6.4V}$

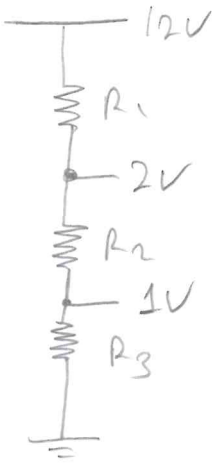

Voltage drop across $R_1 = 10V$

$R_2 = 1V$

$R_3 = 1V$

$R_1 = 10R_2 = 10R_3$

$\boxed{R_2 = R_3 = 10k \quad R_1 = 100k}$

$R_1 = 100k$
$R_2 = 10k$
$R_3 = 10k$ (Ω)
$R_4 = 300$
$R_5 = 5600$

2.2) Simulation and Design Verification

The cascode amplifier was implemented in LTspice as shown in **Figure 1**. While the topology was based on the theoretical design from Task 2.1, an iterative tuning process was necessary to account for non-ideal device parameters and base current loading.

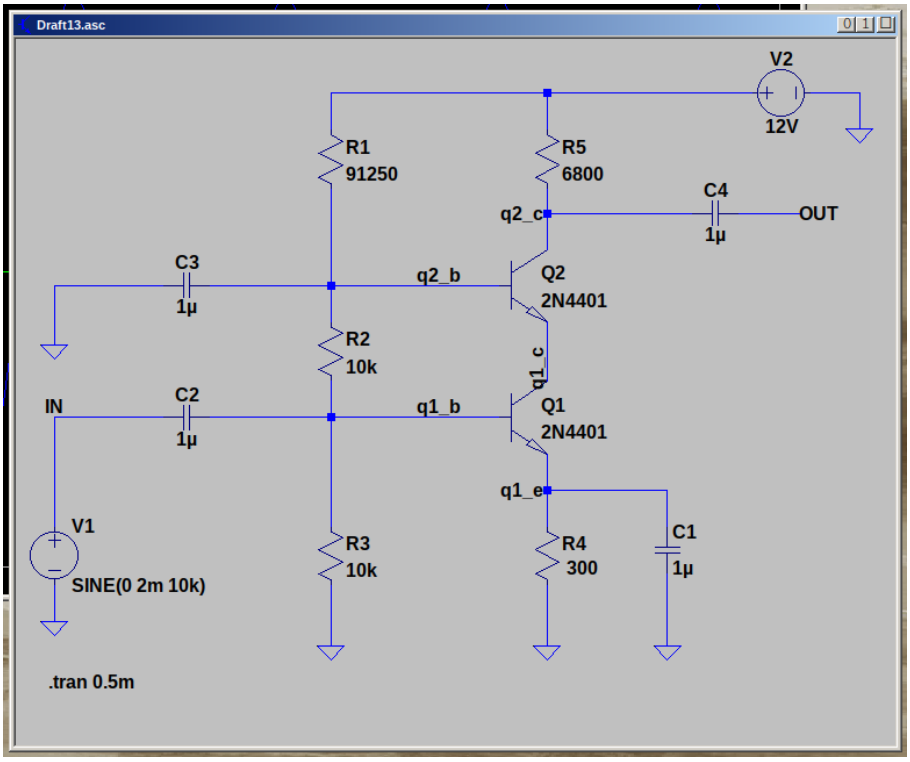

Figure 1: Optimized LTspice schematic of the Cascode Amplifier.

Gain Measurement

A transient analysis was conducted using a $2\,mV$ peak sine wave at $10\,kHz$. As shown in **Figure 2**, the output signal at the collector of Q_2 exhibited a peak amplitude of $420\,mV$. The voltage gain is calculated as:

$$A_v = \frac{V_{out(peak)}}{V_{in(peak)}} = \frac{420\,mV}{2\,mV} = 210 \tag{1}$$

The simulated gain of 210 confirms that the design meets the laboratory requirement of $A_v > 200$.

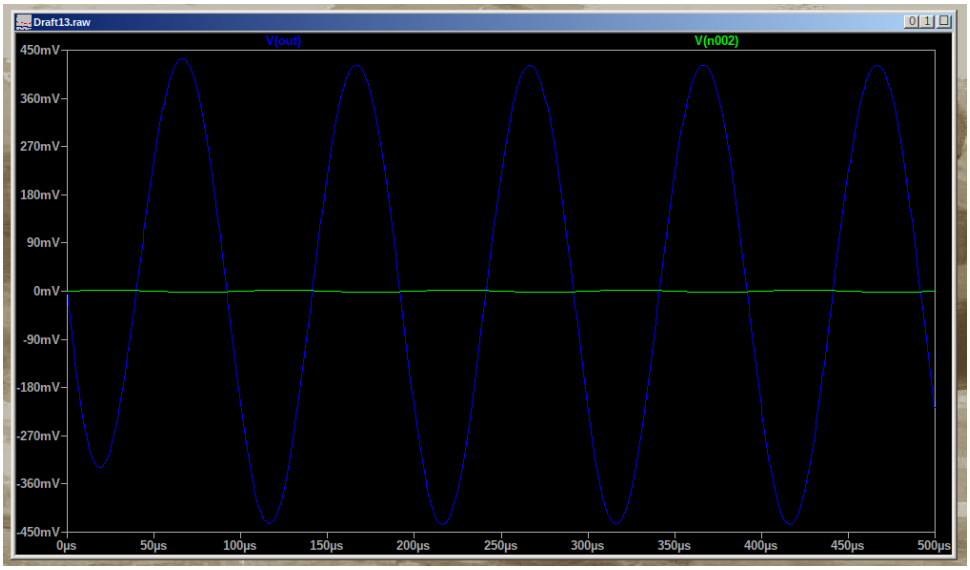

Figure 2: Transient analysis showing V_{in} and V_{out} waveforms.

Input and Output Impedance Measurements

Using AC small-signal analysis at $10\,kHz$, the input and output impedances were characterized. The results are visualized in **Figures 3** and **4**.

- **Input Impedance (Z_{in}):** Measured at the base of Q_1, the impedance was found to be approximately $\mathbf{2.44\,k\Omega}$. This value is determined by the parallel combination of the biasing resistors ($R_2 \parallel R_3$) and the transistor's dynamic input resistance (r_π).

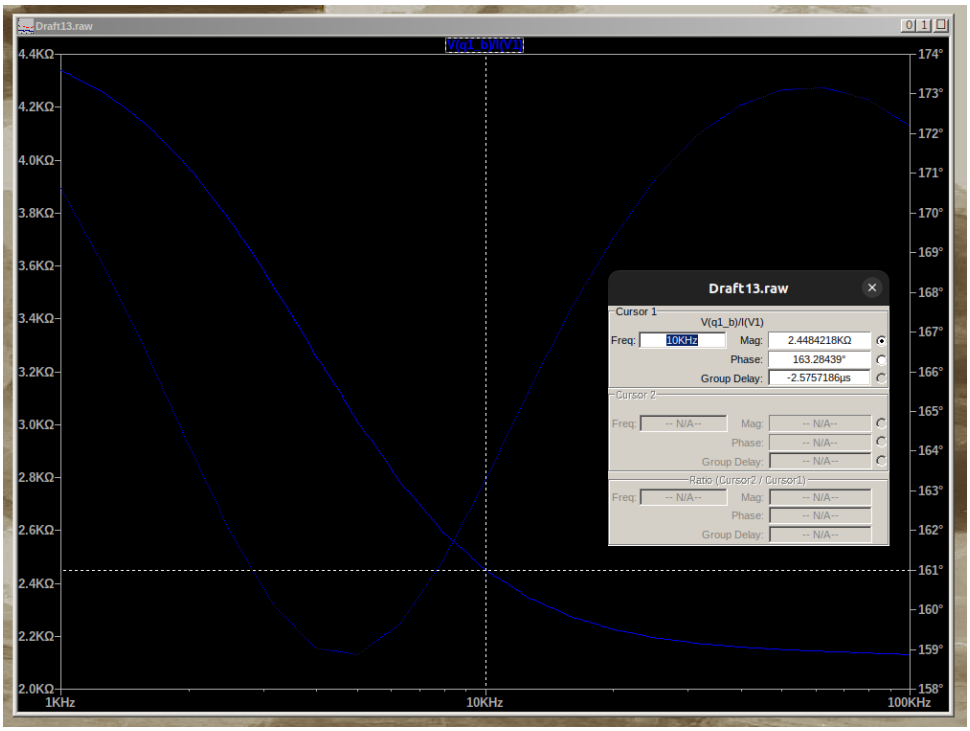

Figure 3: AC Analysis: Input Impedance.

- **Output Impedance (Z_{out}):** Measured by probing the output node. The result was approximately $\mathbf{6.8\,k\Omega}$, which is dominated by the load resistor R_5.

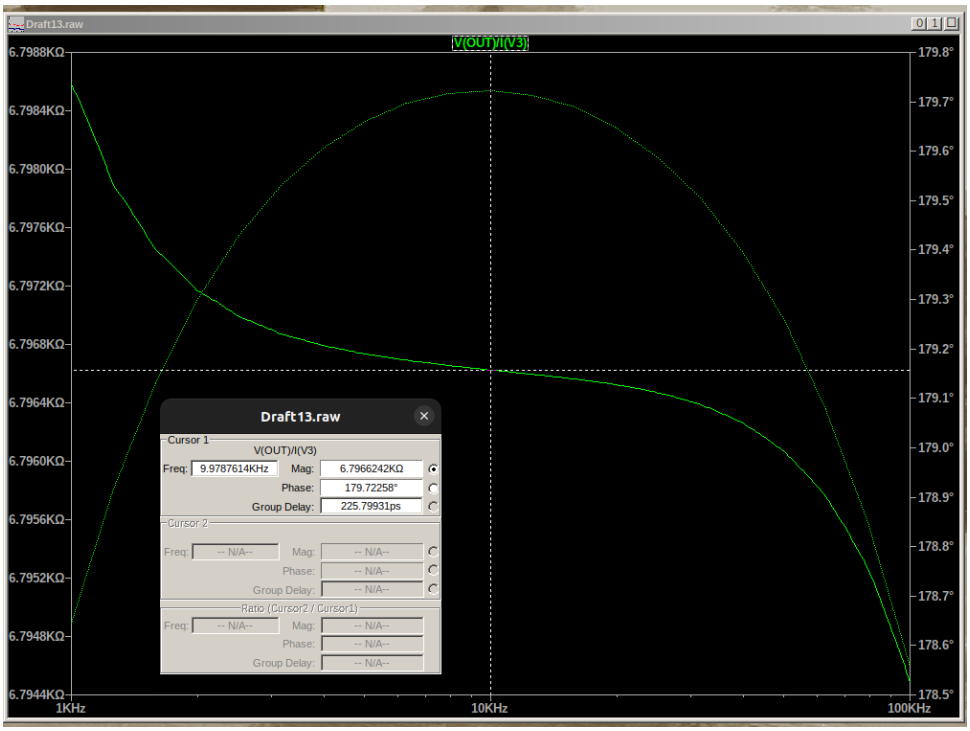

Figure 4: AC Analysis: Output Impedance.

2.3)

$$I_D = \frac{\mu_n C_{ox} W}{2L} \cdot (V_{GS} - V_{TH})^2$$

$I_D = 1\,mA$

$V_{TH} = 2.1\,V$

$\mu_n C_{ox} \cdot \frac{W}{L} = 180\,mA/V^2$

$$1\,mA = \frac{1}{2} \cdot (180\,mA/V^2) \cdot (V_{GS} - 2.1\,V)^2$$

$$\boxed{V_{GS} \approx 2.205\,V}$$

$$R_1 = \frac{V_{CC} - V_G}{I_D} = \frac{12 - 2.205}{1\,mA}$$

$$\boxed{R_1 = 9795\,\Omega}$$

Introduction & Objectives

A **cascode amplifier** combines common-emitter (CE) and common-base (CB) stages, significantly increasing output impedance and reducing the Miller effect to enhance gain and bandwidth. It is a critical topology for RF front-ends and high-performance operational amplifiers.

A **current mirror** is a fundamental building block that replicates a reference current into a load branch, independent of load voltage variations. It is essential for biasing networks and active loads in integrated circuits.

Laboratory Objectives

- **Cascode Amplifier:** Design, construct, and characterize a BJT (2N4401) cascode stage.
- **Performance Analysis:** Measure experimental voltage gain, input impedance, and output impedance.
- **Current Mirror:** Design and construct an NMOS (2N7000) current mirror and verify its current-copying accuracy across varying load resistances.

1 Experiments

Task 1: Cascode Amplifier – Gain Measurement

A. Circuit Construction

The cascode amplifier was constructed on a breadboard using two 2N4401 NPN BJT transistors following the topology shown in Cir. 2.1 of the lab manual. The resistor values provided by the teaching assistant were used:

Component	Value
R1	68 kΩ
R2	3.3 kΩ
R3	4.7 kΩ
R4	330 Ω (later changed to 1 kΩ)
R5	33 kΩ

The supply voltage was set to $V_{CC} = 12\,\mathrm{V}$ and all coupling/bypass capacitors were $1\,\mu\mathrm{F}$ electrolytic capacitors. Care was taken to observe the correct polarity of each electrolytic capacitor during construction.

B. Initial Measurement with R4 = 330 Ω (Clipping Observed)

With the original R4 = 330 Ω, the function generator was set to a 10 mV peak-to-peak sine wave at 10 kHz. The oscilloscope measurement showed:

- Measured input (V_{ipp}): $31.2\,\mathrm{mV_{pp}}$ (due to noise pickup on the small 10 mV signal)
- Measured output (V_{opp}): $2.6\,\mathrm{V_{pp}}$

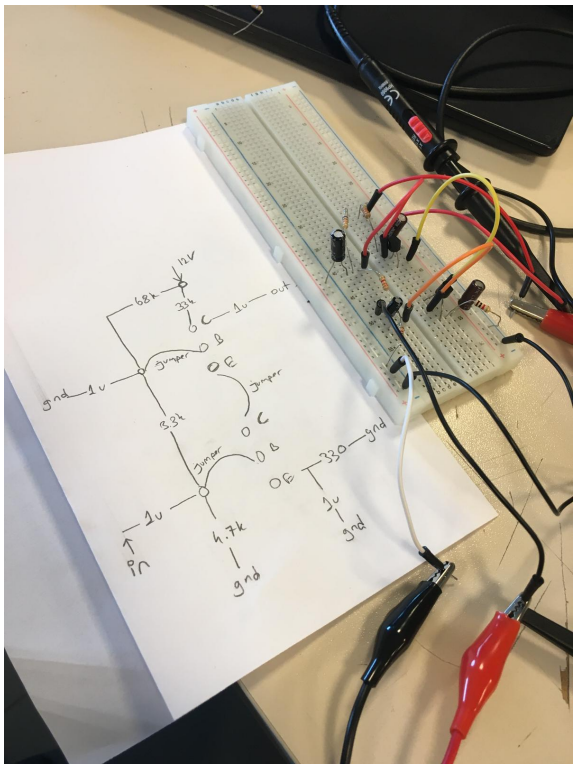

(a) Breadboard implementation of the cascode amplifier.

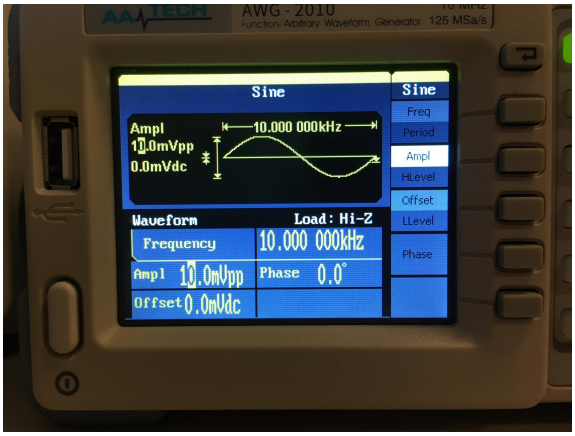

(b) Function generator set to $10\,\mathrm{mV_{pp}}$ at $10\,\mathrm{kHz}$.

Figure 1: Constructed circuit and input signal source for Task 1.

As seen in Figure 2, the output waveform exhibited clear **clipping**, meaning the transistor Q1 was being driven into saturation on the negative half-cycle. This indicates that the gain with R4 $= 330\,\Omega$ was high enough to push the output beyond the linear operating range of the amplifier.

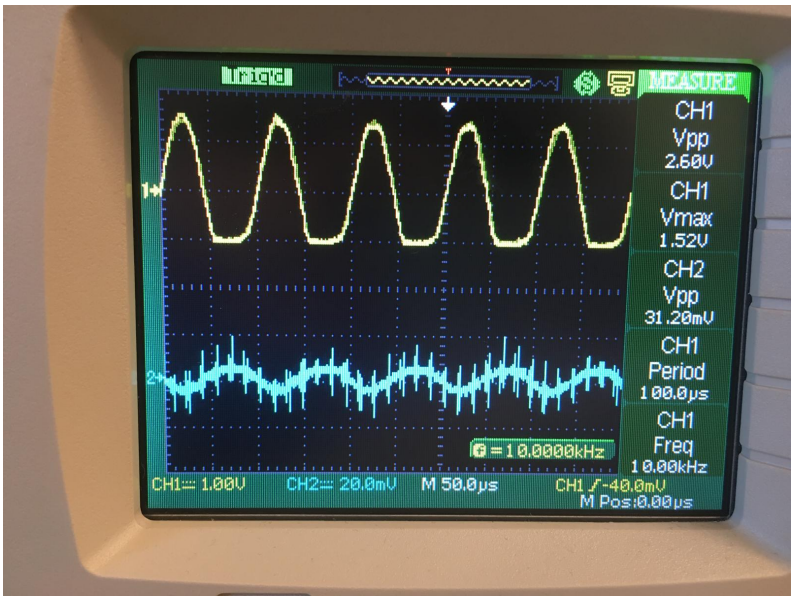

Figure 2: Oscilloscope output with R4 $= 330\,\Omega$. The output waveform shows clipping, indicating the amplifier is operating outside its linear region.

C. Corrected Measurement with R4 = 1 kΩ

To eliminate clipping, R4 was increased to 1 kΩ. This raises the emitter degeneration resistance of Q2, which reduces the overall transconductance and therefore lowers the gain, bringing the output swing back within the linear region. The measurements with R4 = 1 kΩ were:

- Input (V_{ipp}): 10 $\mathrm{mV_{pp}}$ (nominal, set by function generator)
- Measured output (V_{opp}): 1.88 $\mathrm{V_{pp}}$

The voltage gain is calculated as:

$$A_v = \frac{V_{opp}}{V_{ipp}} = \frac{1.88\,\mathrm{V}}{0.01\,\mathrm{V}} = \mathbf{188} \tag{1}$$

This is close to the target gain of 200 specified in the prelab. The small discrepancy is attributed to component tolerances and the fact that the actual transistor β and g_m values may differ slightly from the ideal datasheet values used in calculations.

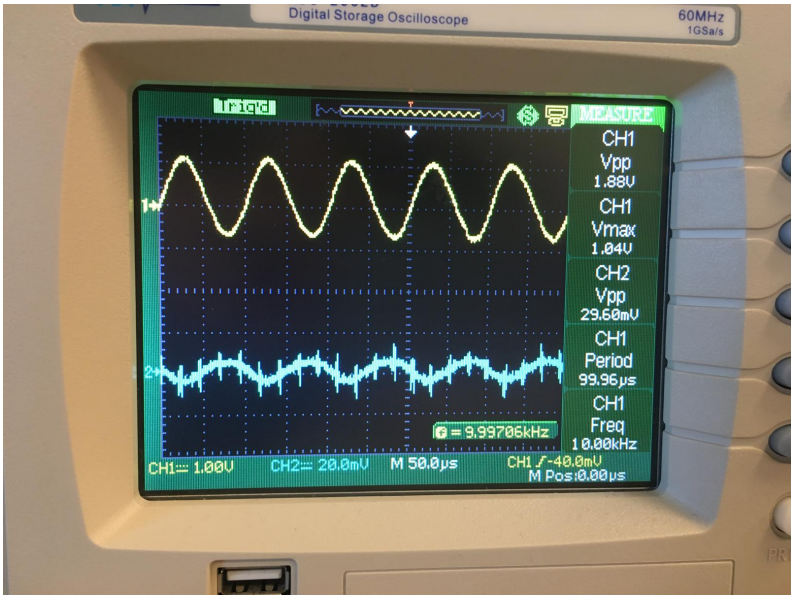

Figure 3: Oscilloscope output with R4 = 1 kΩ. The output waveform is a clean sinusoid with V_{opp} = 1.88 $\mathrm{V_{pp}}$, confirming linear operation and a gain of 188.

Comment: The increase of R4 from 330 Ω to 1 kΩ resolved the clipping by introducing stronger emitter degeneration, which trades gain for linearity. It is also worth noting that because the input signal is only 10 $\mathrm{mV_{pp}}$, the oscilloscope reading is susceptible to ambient noise and ground loop interference, which explains why the scope measured 29–31 mV rather than exactly 10 mV at the input node. For the gain calculation, the nominal function generator value of 10 $\mathrm{mV_{pp}}$ is used as it represents the true input to the circuit.

Task 2: Input Impedance Measurement

A. Method

To measure the input impedance, a potentiometer was connected in series between the function generator and the amplifier input, initially set to zero. The output voltage was monitored on the oscilloscope while the potentiometer resistance was gradually increased. When the output amplitude dropped to half of its original value, the potentiometer was removed and its resistance was measured.

This method works because the potentiometer (R_{pot}) and the amplifier input impedance (Z_{in}) form a voltage divider at the input:

$$V_{in} = V_s \cdot \frac{Z_{in}}{Z_{in} + R_{pot}} \tag{2}$$

When the output drops to half, $V_{in} = V_s/2$, which gives:

$$\frac{1}{2} = \frac{Z_{in}}{Z_{in} + R_{pot}} \implies Z_{in} = R_{pot} \tag{3}$$

Therefore, the input impedance equals the potentiometer resistance at the half-amplitude point.

B. Results

With the input set to $10\,\mathrm{mV_{pp}}$ at $10\,\mathrm{kHz}$, the reference output voltage was measured as $V_{opp} = 1.9\,\mathrm{V_{pp}}$. The potentiometer was increased until the output dropped to half:

Parameter	Value
Reference output (V_{opp})	$1.90\,\mathrm{V_{pp}}$
Half-amplitude output	$960\,\mathrm{mV_{pp}}$
Potentiometer reading (R_{pot})	$2.12\,\mathrm{k\Omega}$
Input Impedance (Z_{in})	$\mathbf{2.12\,k\Omega}$

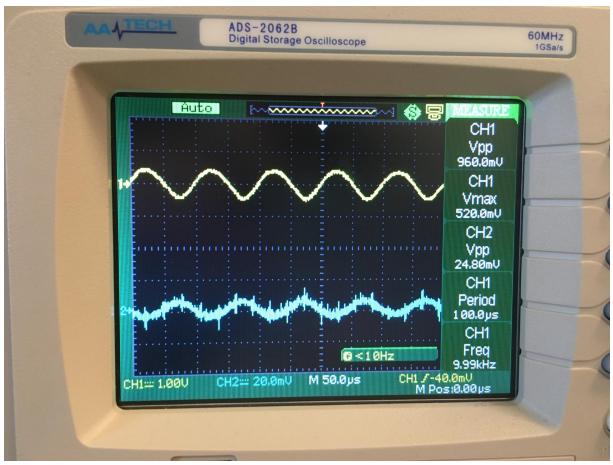

Figure 4: Oscilloscope Results

Comment: The measured input impedance of 2.12 kΩ is consistent with the expected value for this cascode topology. The input impedance is primarily determined by the parallel combination of the biasing resistors R1, R2 and the transistor's input resistance r_π, given by:

$$Z_{in} = R1 \| R2 \| r_{\pi 2} \approx 68\text{k} \| 3.3\text{k} \| r_\pi \approx 2\text{–}3\,\text{k}\Omega \tag{4}$$

The dominant term is R2 = 3.3 kΩ in parallel with r_π, which pulls the input impedance down to the measured 2.12 kΩ.

Task 3: Output Impedance Measurement

A. Method

The potentiometer was removed from the input and the signal generator was reconnected directly. The potentiometer was then connected between the output node and ground, starting at its maximum value of 100 kΩ. Its resistance was gradually reduced while monitoring the output on the oscilloscope. When the output dropped to half its original amplitude, the potentiometer was removed and measured.

This works because the output impedance (Z_{out}) and the potentiometer (R_{pot}) form a load divider at the output:

$$V_{out} = V_{oc} \cdot \frac{R_{pot}}{Z_{out} + R_{pot}} \tag{5}$$

At the half-amplitude point:

$$\frac{1}{2} = \frac{R_{pot}}{Z_{out} + R_{pot}} \implies Z_{out} = R_{pot} \tag{6}$$

B. Results

Parameter	Value
Reference output (V_{opp})	1.88 V_{pp}
Half-amplitude output	920 mV_{pp}
Potentiometer reading (R_{pot})	24.42 kΩ
Output Impedance (Z_{out})	**24.42 kΩ**

Comment: The measured output impedance of 24.42 kΩ is consistent with the cascode topology, where the output impedance is approximately equal to R5 in parallel with the large output resistance of the cascode stage:

$$Z_{out} \approx R5 \| r_{o1} \approx 33\,\text{k}\Omega \| r_{o1} \tag{7}$$

Since R5 = 33 kΩ is the dominant term, the measured 24.42 kΩ is a reasonable result, with the difference accounted for by the finite r_o of Q1 pulling the impedance slightly below R5.

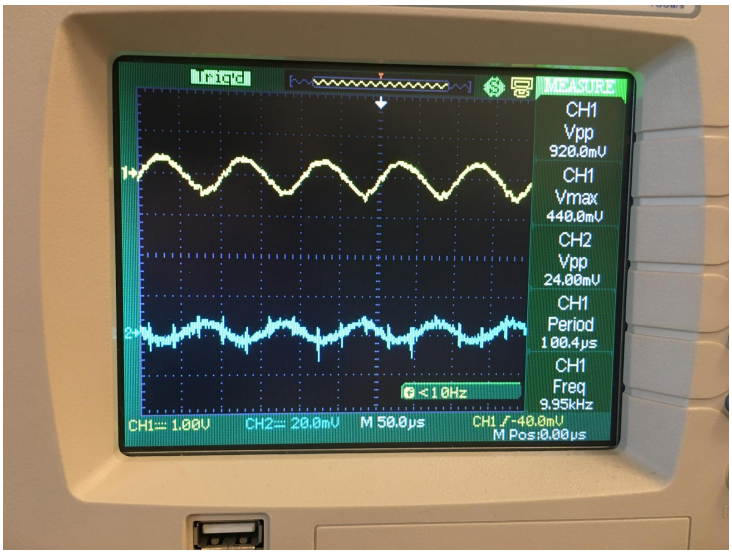

Figure 5: Output dropped to 920 $\mathrm{mV_{pp}}$ at $R_{pot} = 24.42\,\mathrm{k\Omega}$.

Task 4: NMOS Current Mirror

A. Circuit Construction

The NMOS current mirror (Cir. 2.3) was constructed using two 2N7000 transistors with the calculated R1 value. The reference current was set to 1 mA. The current through $\mathrm{R_{LOAD}}$ was determined by measuring the voltage across it with a multimeter and applying Ohm's law:

$$I_{load} = \frac{V(R_{load})}{R_{load}} \tag{8}$$

B. Results

R_{load} (Ω)	Measured $V(R_{load})$ (V)	Calculated I_{load} (mA)
10	0.013	1.30
100	0.124	1.24
1000	1.275	1.28
10000	9.12	0.91
20000	11.58	0.58
30000	11.70	0.39

Table 1: Measured voltage and calculated current through R_{load}.

C. Comment

For low load resistances (10 Ω to 1 kΩ), the current through $\mathrm{R_{LOAD}}$ remains approximately 1.2 mA, which is close to the designed reference current of 1 mA. The slight excess above 1 mA is due to component tolerances and the finite output resistance of the MOSFET.

As $\mathrm{R_{LOAD}}$ increases beyond 1 kΩ, the current drops significantly. This occurs because a large load resistance causes the voltage at the drain of M2 to rise:

$$V_{DS2} = V_{CC} - I_{load} \cdot R_{load} \tag{9}$$

When V_{DS2} falls below $V_{GS} - V_{TH}$, M2 exits the saturation region and enters the triode (linear) region, where it can no longer maintain a constant drain current. At $R_{load} = 30\,\mathrm{k\Omega}$, the voltage across the load reaches 11.70 V, nearly equal to $V_{CC} = 12\,\mathrm{V}$, confirming that M2 is fully out of saturation and the mirror has broken down.
In summary, the current mirror operates correctly for $R_{load} \leq 1\,\mathrm{k\Omega}$ and fails to maintain constant current for larger load resistances due to the MOSFET leaving saturation.

2 Conclusion

In this experiment, a BJT cascode amplifier and an NMOS current mirror were successfully constructed and characterised. The cascode amplifier achieved a voltage gain of 188, close to the target of 200, with a measured input impedance of 2.12 kΩ and output impedance of 24.42 kΩ. The high output impedance is a key advantage of the cascode topology, making it suitable for applications requiring high gain and high output resistance such as RF amplifiers and op-amp input stages.

The current mirror maintained a stable current of approximately 1.2 mA for load resistances up to 1 kΩ, beyond which the current dropped as the MOSFET exited saturation. This highlights the importance of keeping the drain voltage of M2 sufficiently high for correct mirror operation.

Several sources of error were observed throughout the experiment. The small 10 mV input signal was susceptible to ambient noise, causing the oscilloscope to read slightly higher values than the actual input. Component tolerances of the resistors and transistor parameter variations between individual devices also contributed to deviations from theoretical values. Additionally, breadboard contact resistance introduced small but non-negligible errors, particularly at low load resistances in the current mirror measurements. Despite these non-idealities, the experimental results were in good agreement with theoretical expectations.