2.1)

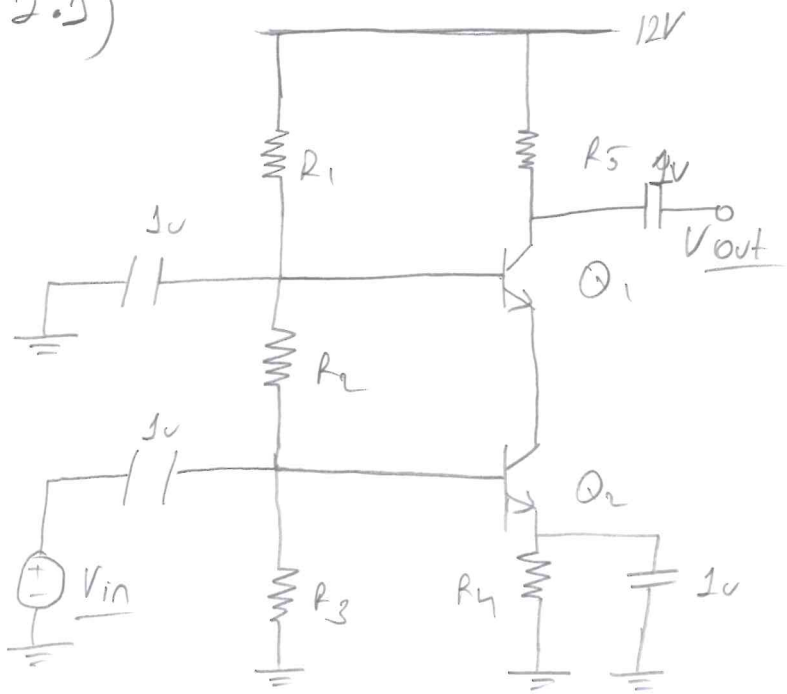

(theorathical calculations)

$R_4 = 300$ (given)

$I_c = 1\,mA$.

$VQ_{2E} = 300 \cdot 1\,mA = 0.3V$

$V_{Q_{2B}} = 0.3 + 0.7 = 1V$

$V_{Q_{2C}} = 1 + \underbrace{0.3}_{\text{choosen by me}} = 1.3V$

$V_{Q_1E} = V_{Q_2C}$

$$\boxed{V_{Q1B} = \underbrace{V_{BE}}_{0.7V} + \underbrace{V_{Q1E}}_{1.3V} = 2V}$$

$$g_m = \frac{I_c}{V_T} = \frac{1mA}{26mV} \approx 38.5\,mS$$

$A_V \approx g_m R_5 \longrightarrow 38.5mS R_5 = 200$ $\boxed{R_5 \approx 5195\Omega}$

$\boxed{R_5 = 5600 \text{ for standart}}$

$V_{Q1c} = 12 - I_c R_5 = 12 - 1mA \cdot 5600 = \boxed{6.4V}$

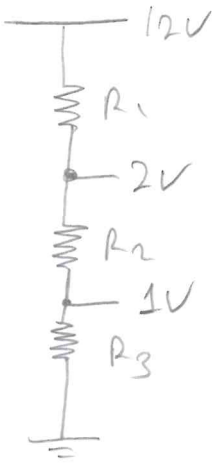

Voltage drop across $R_1 = 10V$

$R_2 = 1V$

$R_3 = 1V$

$R_1 = 10R_2 = 10R_3$

$\boxed{R_2 = R_3 = 10k \quad R_1 = 100k}$

$R_1 = 100k$
$R_2 = 10k$
$R_3 = 10k$ (Ω)
$R_4 = 300$
$R_5 = 5600$

2.2) Simulation and Design Verification

The cascode amplifier was implemented in LTspice as shown in **Figure 1**. While the topology was based on the theoretical design from Task 2.1, an iterative tuning process was necessary to account for non-ideal device parameters and base current loading.

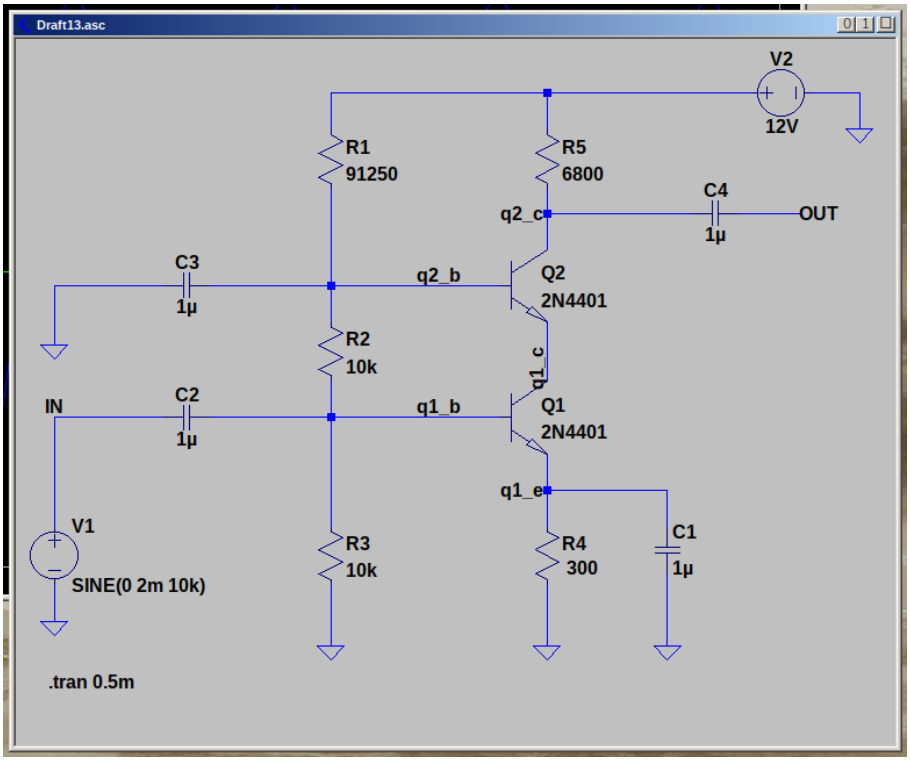

Figure 1: Optimized LTspice schematic of the Cascode Amplifier.

Gain Measurement

A transient analysis was conducted using a $2\,mV$ peak sine wave at $10\,kHz$. As shown in **Figure 2**, the output signal at the collector of Q_2 exhibited a peak amplitude of $420\,mV$. The voltage gain is calculated as:

$$A_v = \frac{V_{out(peak)}}{V_{in(peak)}} = \frac{420\,mV}{2\,mV} = 210 \tag{1}$$

The simulated gain of 210 confirms that the design meets the laboratory requirement of $A_v > 200$.

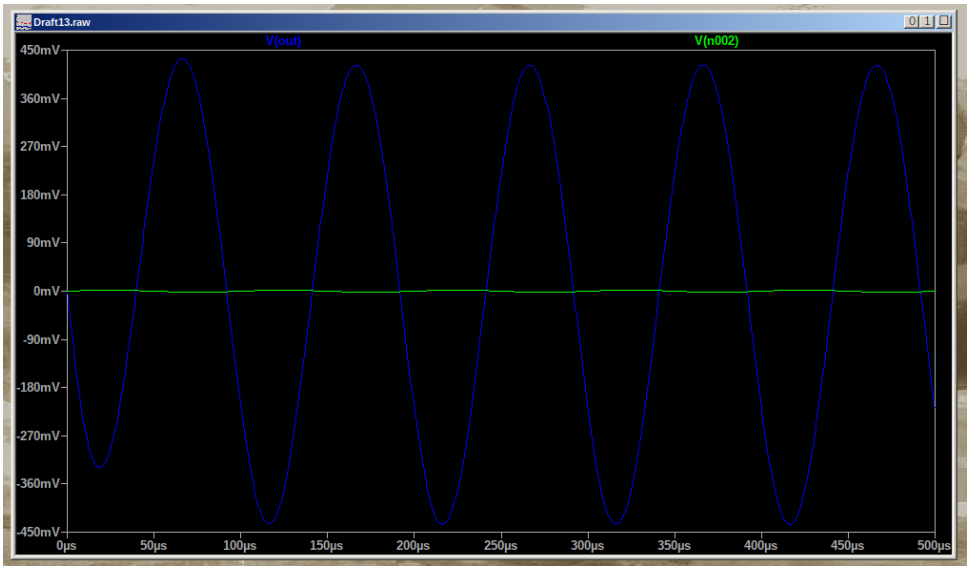

Figure 2: Transient analysis showing V_{in} and V_{out} waveforms.

Input and Output Impedance Measurements

Using AC small-signal analysis at $10\,kHz$, the input and output impedances were characterized. The results are visualized in **Figures 3** and **4**.

- **Input Impedance (Z_{in}):** Measured at the base of Q_1, the impedance was found to be approximately $\mathbf{2.44\,k\Omega}$. This value is determined by the parallel combination of the biasing resistors ($R_2 \parallel R_3$) and the transistor's dynamic input resistance (r_π).

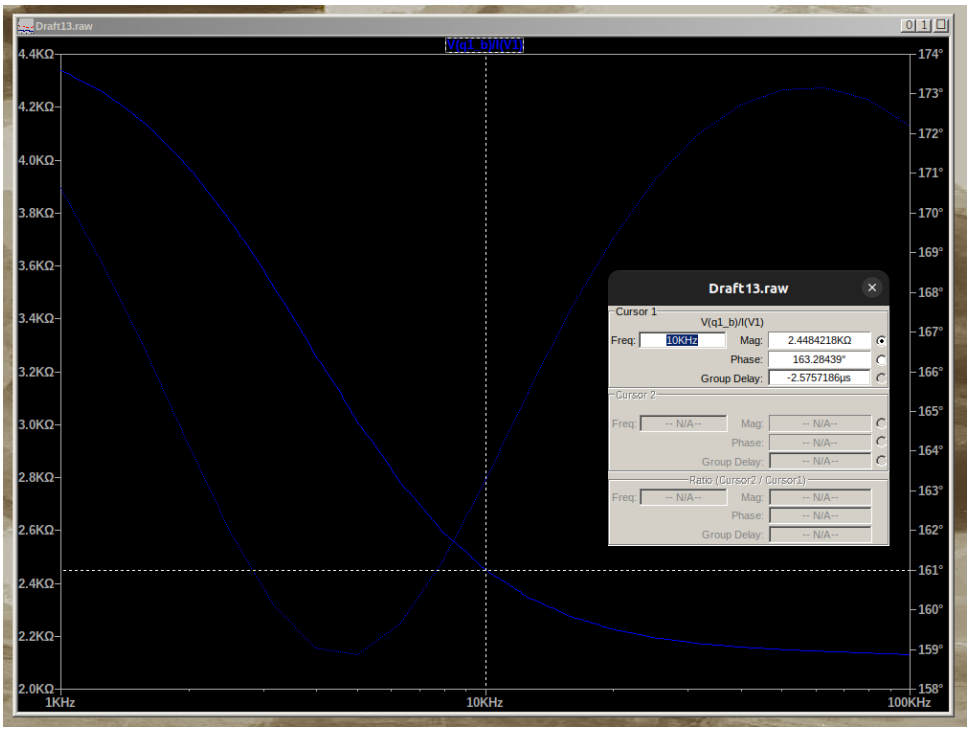

Figure 3: AC Analysis: Input Impedance.

- **Output Impedance (Z_{out}):** Measured by probing the output node. The result was approximately $\mathbf{6.8\,k\Omega}$, which is dominated by the load resistor R_5.

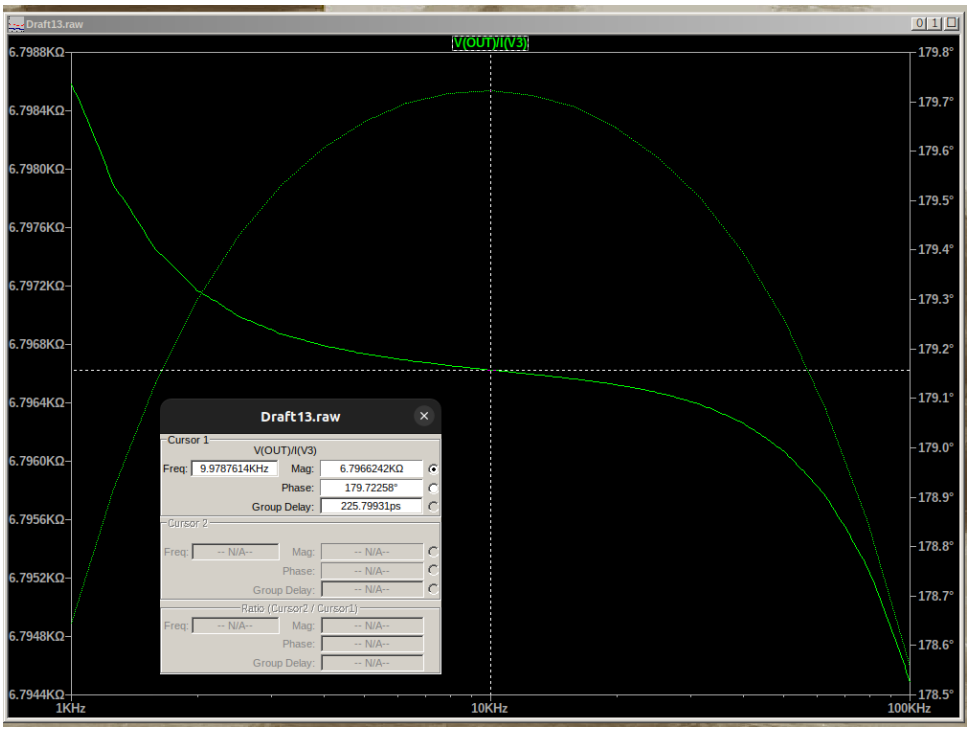

Figure 4: AC Analysis: Output Impedance.

2.3)

$$I_D = \frac{\mu_n C_{ox} W}{2L} \cdot (V_{GS} - V_{TH})^2$$

$I_D = 1\,mA$

$V_{TH} = 2.1\,V$

$\mu_n C_{ox} \cdot \frac{W}{L} = 180\,mA/V^2$

$$1\,mA = \frac{1}{2} \cdot (180\,mA/V^2) \cdot (V_{GS} - 2.1\,V)^2$$

$$\boxed{V_{GS} \approx 2.205\,V}$$

$$R_1 = \frac{V_{CC} - V_G}{I_D} = \frac{12 - 2.205}{1\,mA}$$

$$\boxed{R_1 = 9795\,\Omega}$$