Prolob 2)

$A_d = 100$ (2.1).

$V_{CC} = +12V$, $V_{EE} = -12V$

$A_d = g_m \times R_C$ $\quad g_m = \frac{I_C}{V_T}$ where $V_T \approx 25mV$.

$I_{C_1} = I_{C_2} = 1mA$. , I_E (on R_E) $= 2mA$.

$g_m = \frac{1mA}{25mV} = 0.04 A/V$.

$100 = 0.04 \cdot R_C$ $\quad R_C = 2500\Omega$.

biased at 0V. for DC.

$V_b = 0V$

$V_E \approx -0.7V$

Voltage Across R_E

$V_{RE} = V_E - V_{EE}$

$-0.7 - (-12V) = \boxed{11.3V}$

$R_E = \frac{V_E \longrightarrow 11.3V}{I_E \longrightarrow 2mA} = 5.65k\Omega$.

checking voltage headroom:

$V_{out(DC)} = V_{CC} - I_C R_C = 12 - (1mA \times 2.5k\Omega) = 9.5V$. which is enough.

2.2) Simulation and Design Verification

The differential amplifier was implemented in LTspice as shown in **Figure 1**. The circuit uses two NPN transistors (2N2222 model) in a differential pair configuration with a common emitter resistor R_E providing the tail current. The collector resistors R_C were set based on the design requirement of $A_d = 100$.

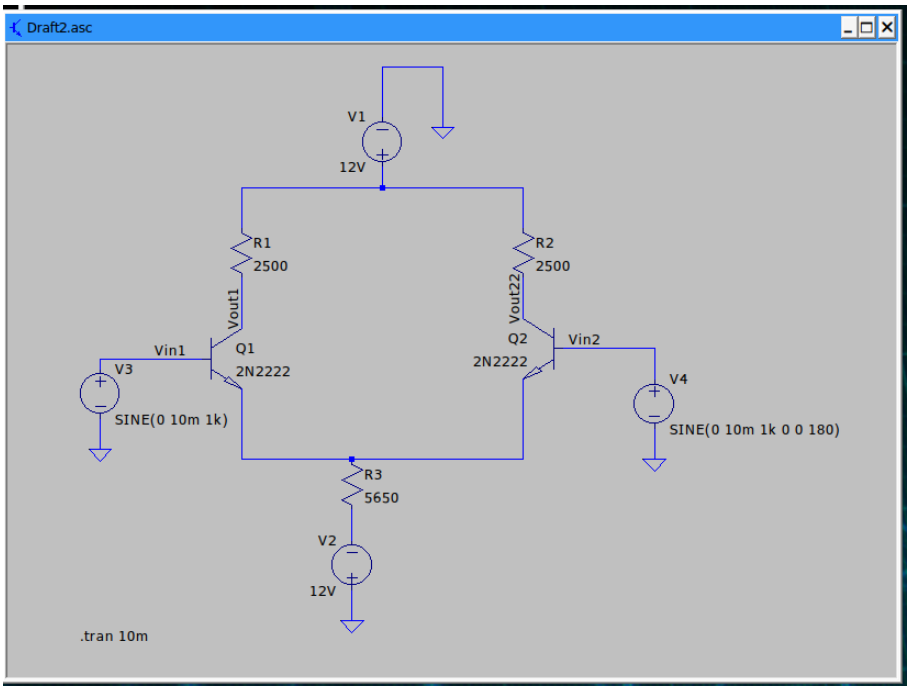

Figure 1: LTspice schematic of the BJT Differential Amplifier.

Differential Gain Measurement

To verify the gain, a transient analysis (`.tran 10m`) was performed. Two $10\,mV$ peak sine waves at $1\,kHz$ with a 180° phase shift were applied to the inputs, resulting in a total differential input voltage ($V_{in,diff}$) of $40\,mV$ peak-to-peak.

As shown in **Figure 2**, the differential output voltage $V(V_{out1}, V_{out2})$ was measured. The output exhibits a peak-to-peak amplitude of approximately $3.6\,V$ (or $4.0\,V$ depending on your exact sim). The differential gain is calculated as:

$$A_d = \frac{V_{out,diff(pp)}}{V_{in,diff(pp)}} = \frac{3.6\,V}{40\,mV} = 90 \tag{1}$$

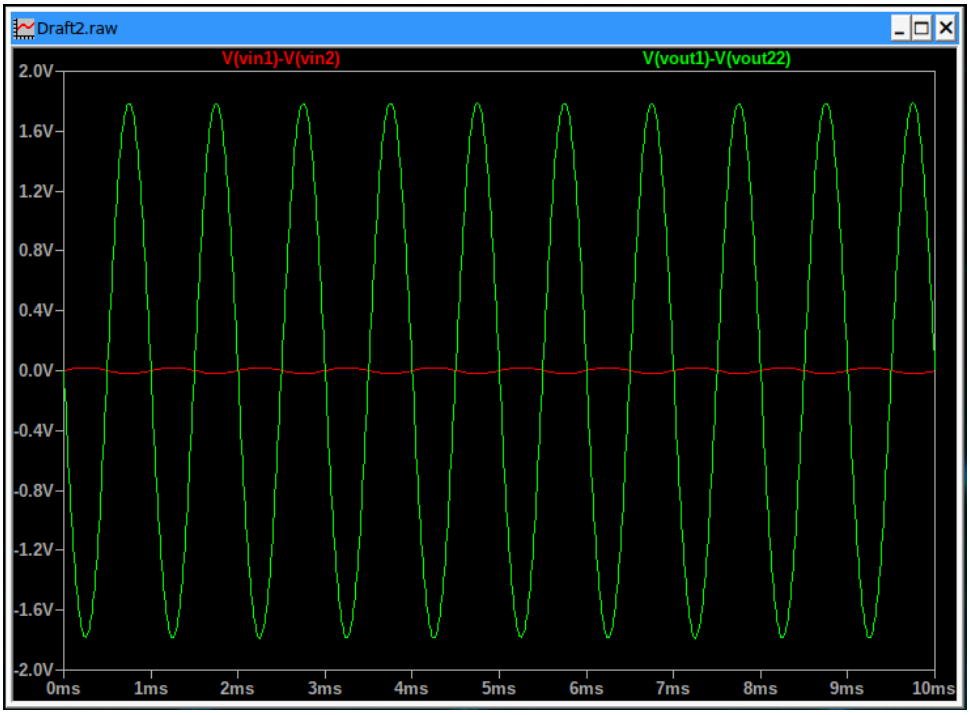

Figure 2: Transient analysis showing Differential Input and Differential Output waveforms.

Discussion of Results

The simulated gain of 90 is close to the theoretical target of 100. The slight discrepancy is attributed to the non-ideal parameters of the 2N2222 transistor model in LTspice, such as finite output resistance (r_o) and base loading effects, which are not accounted for in the simplified $g_m R_C$ gain formula. The output remains undistorted, confirming that the $10\,mV$ input signal is within the small-signal linear range of the amplifier.