Task 1: CMOS Inverter Simulation

The circuit diagram for Task 1 is shown in Figure 1. The circuit includes an output load capacitor, whose value is systematically varied (1 µF, 2.2 µF, and 220 µF) to observe its effect on the inverter's transient response.

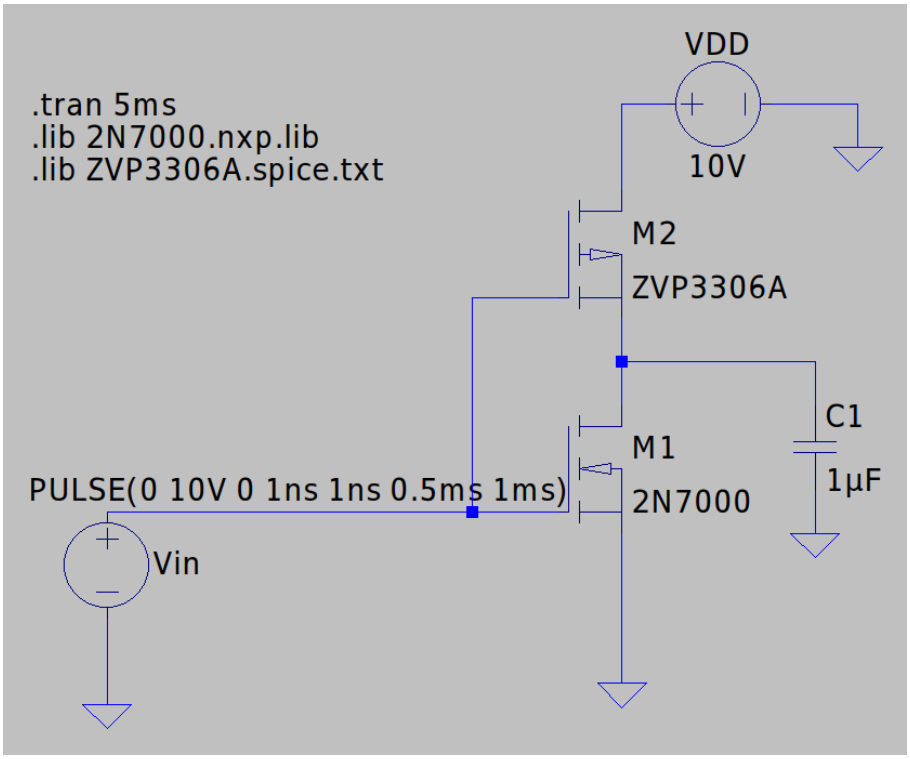

Figure 1: Task 1 - CMOS Inverter Circuit Diagram

Task 1.1: C = 1 µF

When the output load capacitor is set to 1 µF, the transient response of the inverter is observed.

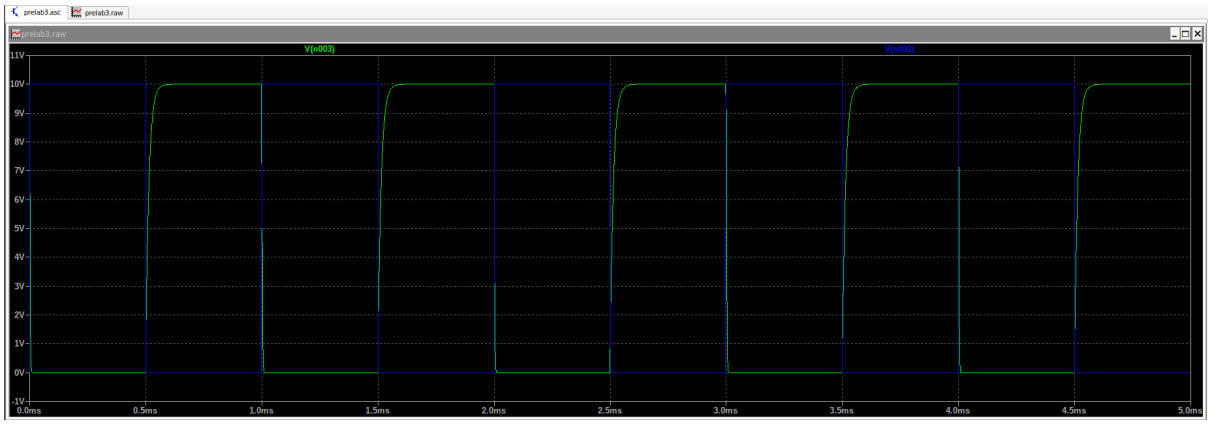

Figure 2: Transient Response with C = 1 µF

Task 1.2: C = 2.2 µF

When the output load capacitor is increased to 2.2 µF, thetransient response of the inverter is observed again.

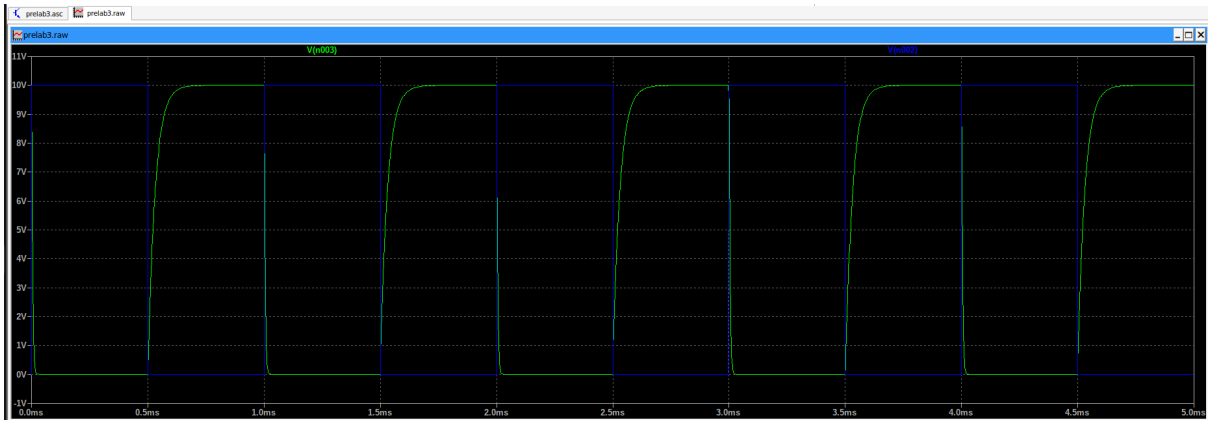

Figure 3: Transient Response with C = 2.2 µF

Task 1.3: C = 220 µF

When the output load capacitor is drastically increased to 220 µF, the transient response of the inverter is severely degraded, as illustrated in Figure 4. Unlike the previous tasks, the output completely fails to reach a full voltage swing (0 V to 10 V) within the 1 ms period. Because the RC time constant is now significantly larger than the 0.5 ms input pulse width, the capacitor cannot fully charge or discharge, resulting in a heavily attenuated, asymmetrical waveform.

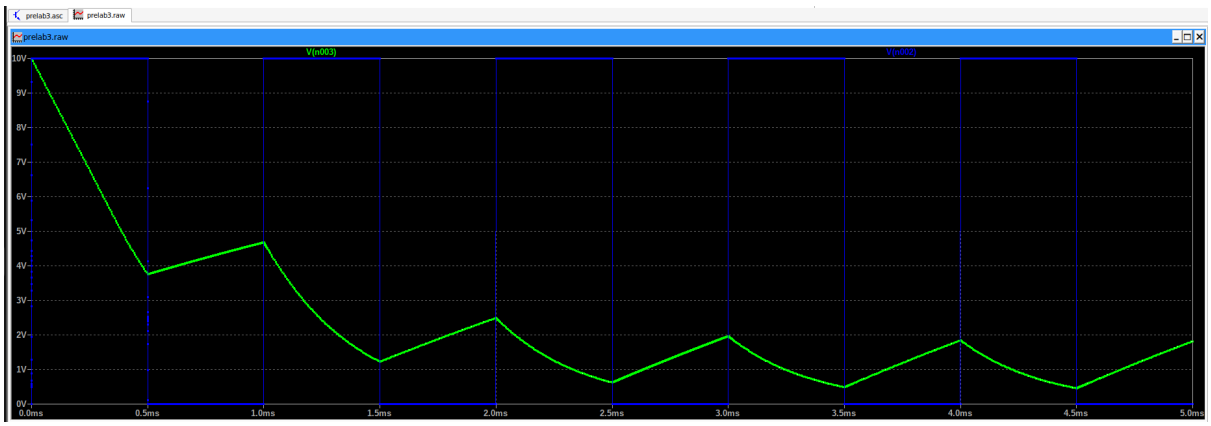

Figure 4: Transient Response with C = 220 µF

Analysis

Effect of Capacitance on Switching Speed:
Increasing load capacitance decreases switching speed. The transition time is dictated by the time constant $\tau = R_{ds(on)} \cdot C_{load}$. While the 1 µF load switches almost instantly, the 220 µF load creates a τ too large for the 1 kHz frequency, proving that large capacitive loads severely limit maximum operating speed.

Analysis of Rise and Fall Times:
The rise and fall times are asymmetrical due to differing PMOS and NMOS characteristics:

- **Fall Time (t_f):** Faster. The NMOS (2N7000) utilizes higher-mobility electrons, resulting in a low on-resistance ($R_n \approx 5\,\Omega$) and rapid discharge to ground.
- **Rise Time (t_r):** Slower. The PMOS (ZVP3306A) relies on lower-mobility holes, resulting in a higher on-resistance ($R_p > R_n$) and a slower charge to 10 V.

Task 2: Ring Oscillator Simulation

The 3-stage ring oscillator circuit is shown in Figure 5.

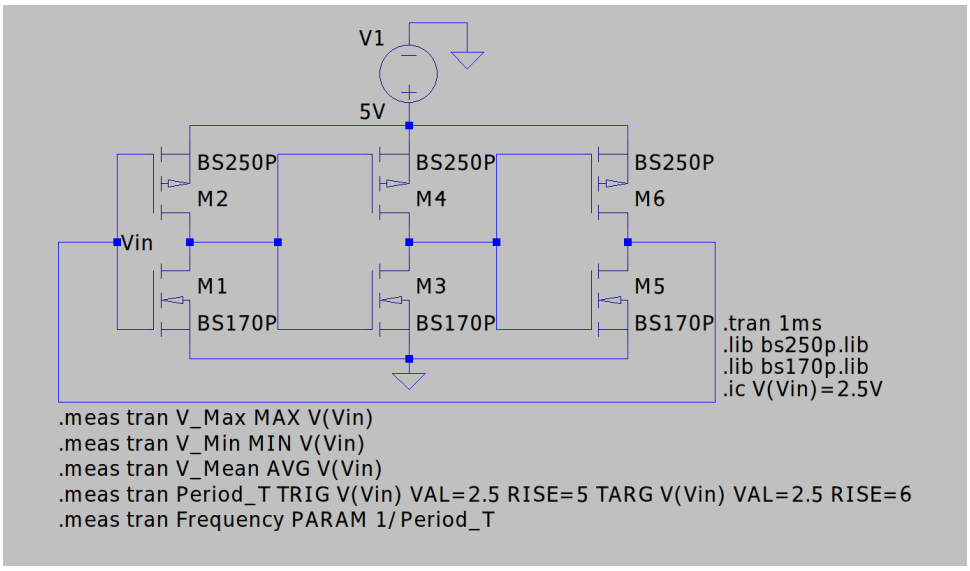

Figure 5: Task 2.1 - 3-Stage Ring Oscillator Schematic

To accurately extract the oscillation parameters without relying on manual cursors, the following `.meas` directives were executed in LTspice:

```
.meas tran V_Max MAX V(Vin)
.meas tran V_Min MIN V(Vin)
.meas tran V_Mean AVG V(Vin)
.meas tran Period_T TRIG V(Vin) VAL=2.5 RISE=5 TARG V(Vin) VAL=2.5 RISE=6
.meas tran Frequency PARAM 1/Period_T
```

The automated results extracted from the SPICE Error Log are tabulated below.

Parameter	**Measured Value**
Maximum Voltage (V_{max})	5.02 V
Minimum Voltage (V_{min})	-0.03 V
Mean Voltage (V_{mean})	2.28 V
Oscillation Period (T)	88.01 ns
Oscillation Frequency (f)	11.36 MHz

Table 1: Transient Measurement Results

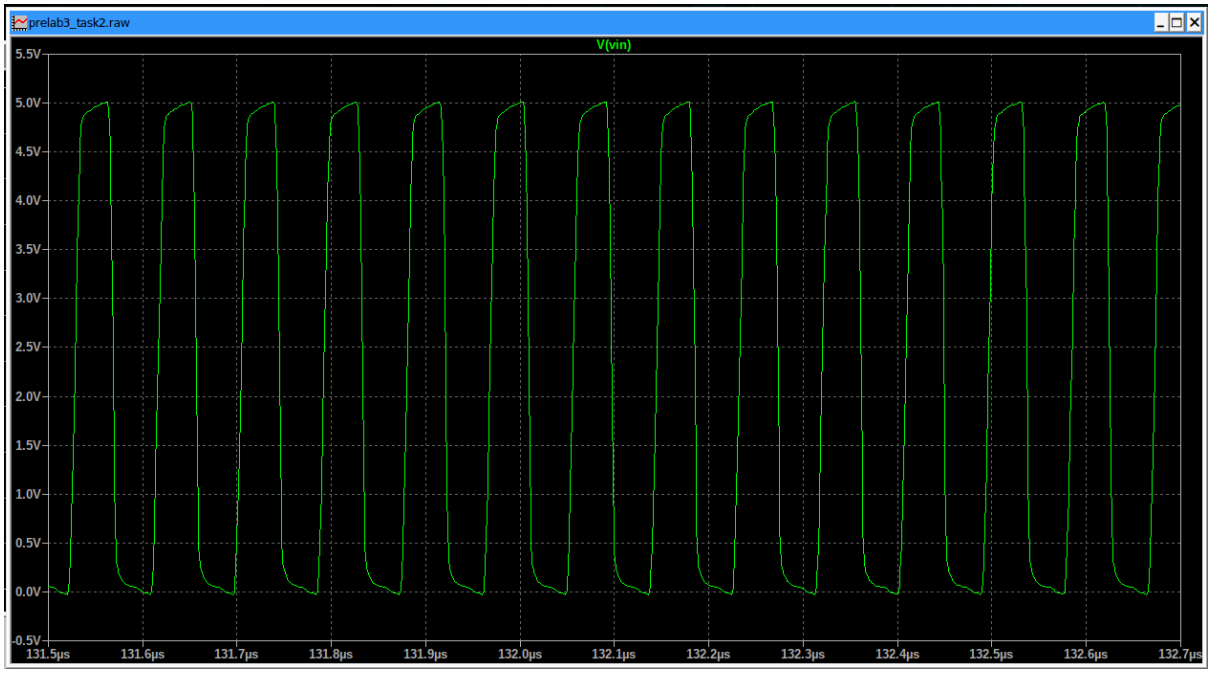

Figure 6: Transient Response of the 3-Stage Ring Oscillator

FFT Analysis and Reflection:
An FFT analysis was performed on the output waveform to observe its frequency spectrum. As shown in Figure 7, manual inspection confirms that the fundamental frequency peak occurs exactly at 11.36 MHz, which perfectly aligns with our transient period calculations. Finally, the measured mean voltage of 2.28 V (rather than a perfect 2.5 V) highlights a slight drive asymmetry, indicating the NMOS device pulls the node to ground slightly faster than the PMOS pulls it to the 5 V rail.

(Note: To preserve the detail of the frequency spikes, the FFT spectrum in Figure 7 is presented in a landscape orientation on the new page for enhanced readability.)

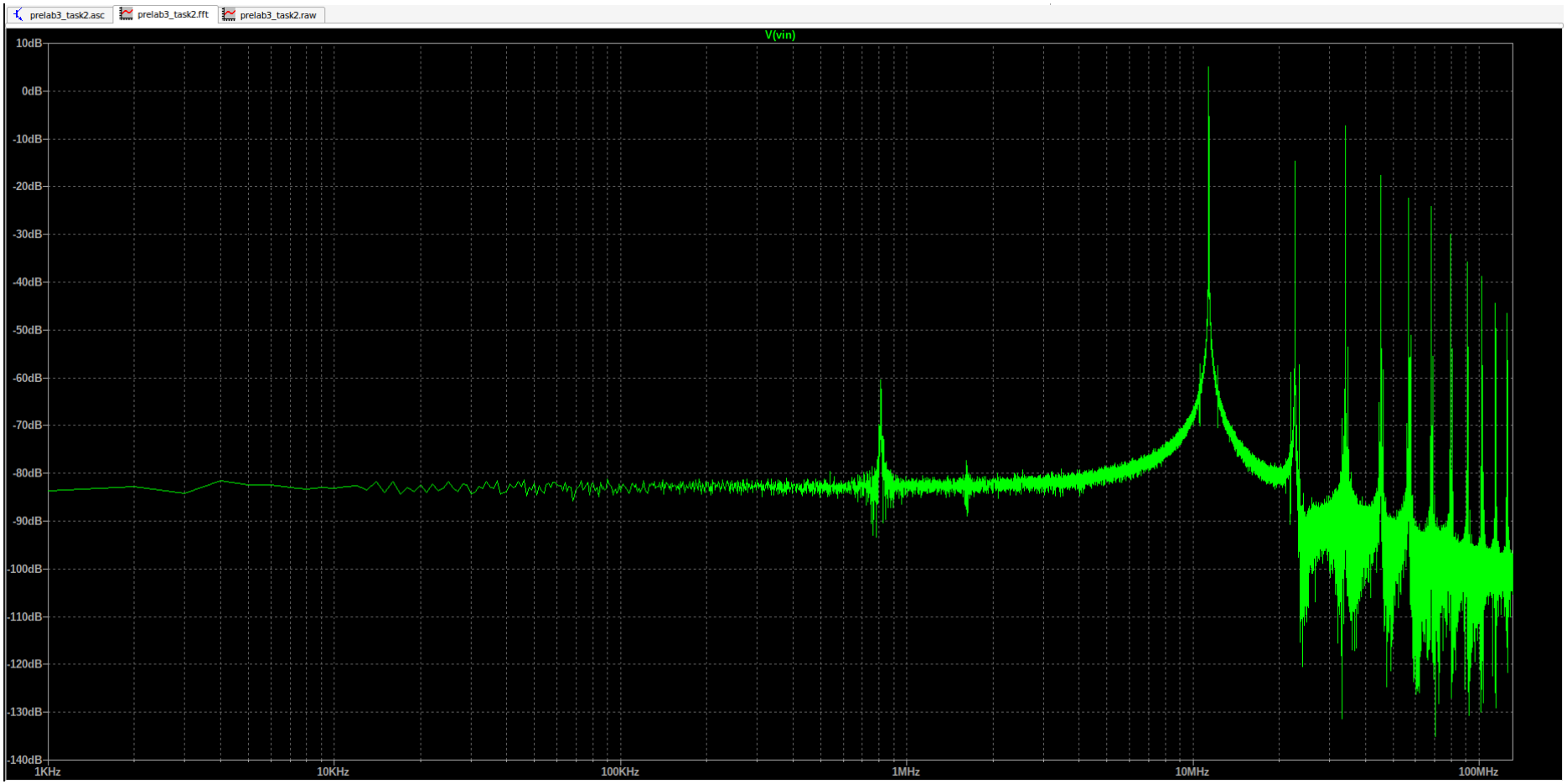

Figure 7: FFT Spectrum demonstrating the fundamental frequency and odd harmonics.