CS:APP Chapter 4
Computer Architecture
Sequential Implementation – I

Y86-64 Instruction Set #1

Byte	0	1	2	3	4	5	6	7	8	9
`halt`	0	0								
`nop`	1	0								
`cmovXX` rA, rB	2	fn	rA	rB						
`irmovq` V, rB	3	0	F	rB	V	V	V	V	V	V
`rmmovq` rA, D(rB)	4	0	rA	rB	D	D	D	D	D	D
`mrmovq` D(rB), rA	5	0	rA	rB	D	D	D	D	D	D
`OPq` rA, rB	6	fn	rA	rB						
`jXX` Dest	7	fn	Dest	Dest	Dest	Dest	Dest	Dest	Dest	Dest
`call` Dest	8	0	Dest	Dest	Dest	Dest	Dest	Dest	Dest	Dest
`ret`	9	0								
`pushq` rA	A	0	rA	F						
`popq` rA	B	0	rA	F						

Y86-64 Instruction Set #2

Byte	0	1	2	3	4	5	6
`halt`	0	0					
`nop`	1	0					
`cmovXX` rA, rB	2	fn	rA	rB			
`irmovq` V, rB	3	0	F	rB	V	V	V
`rmmovq` rA, D(rB)	4	0	rA	rB	D	D	D
`mrmovq` D(rB), rA	5	0	rA	rB	D	D	D
`OPq` rA, rB	6	fn	rA	rB			
`jXX` Dest	7	fn	Dest	Dest	Dest	Dest	Dest
`call` Dest	8	0	Dest	Dest	Dest	Dest	Dest
`ret`	9	0					
`pushq` rA	A	0	rA	F			
`popq` rA	B	0	rA	F			

`rrmovq`	7	0
`cmovle`	7	1
`cmovl`	7	2
`cmove`	7	3
`cmovne`	7	4
`cmovge`	7	5
`cmovg`	7	6

Y86-64 Instruction Set #3

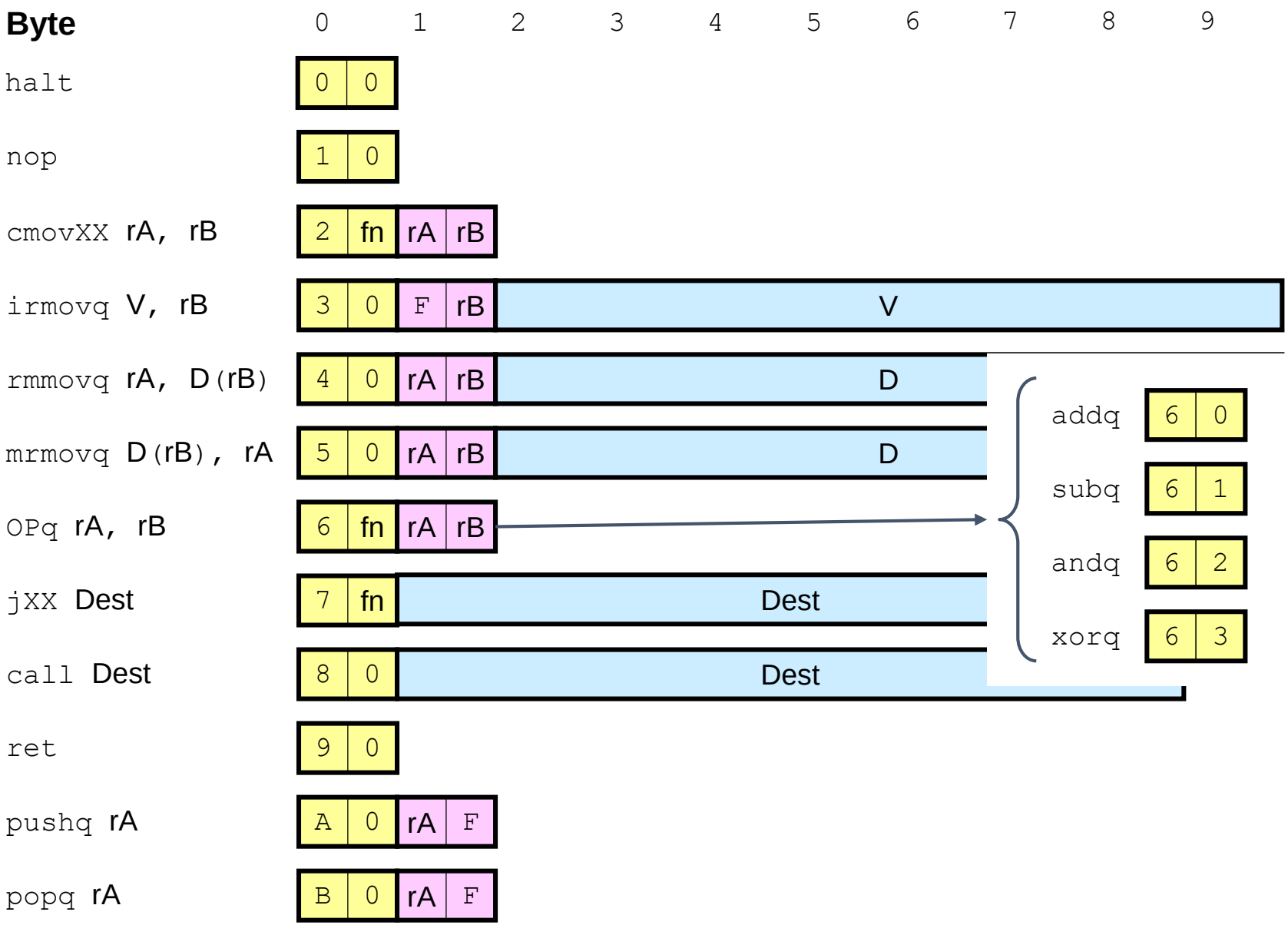

Y86-64 Instruction Set #4

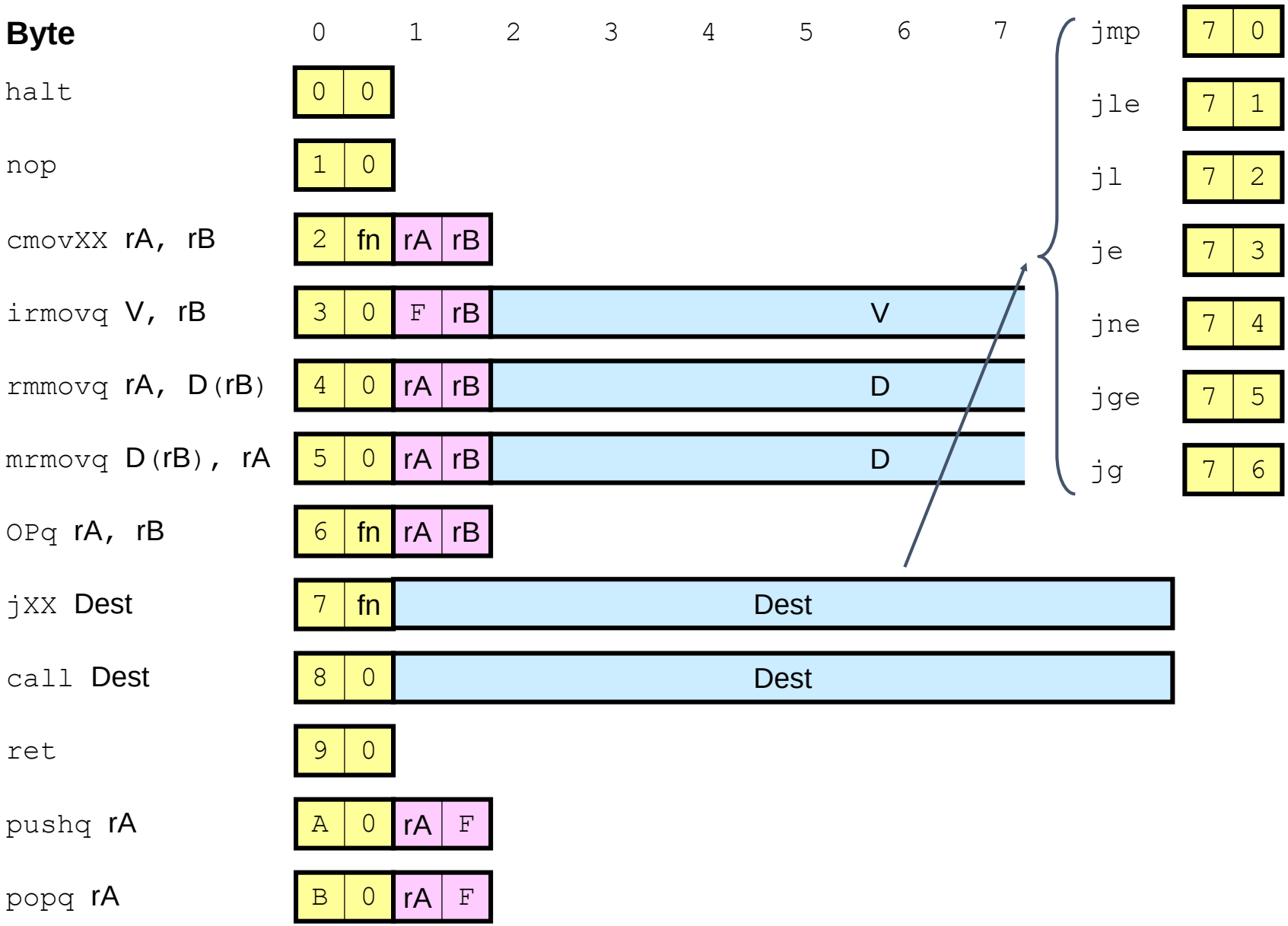

Building Blocks

- Combinational Logic
  - Compute Boolean functions of inputs
  - Continuously respond to input changes
  - Operate on data and implement control

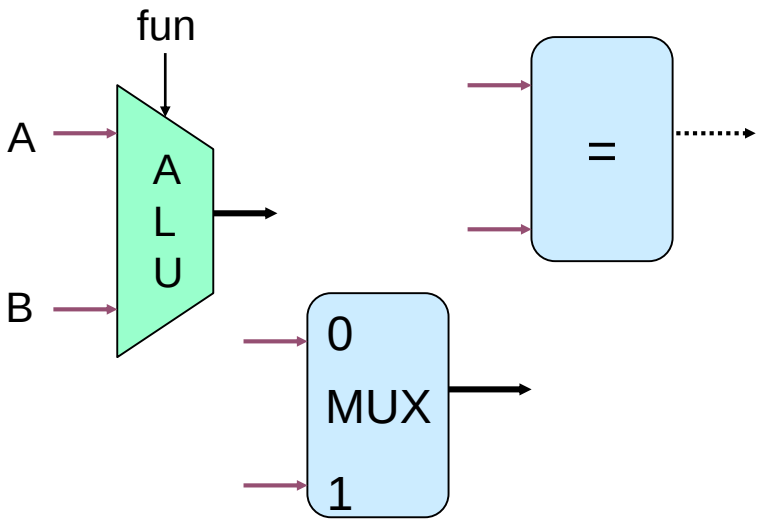

- Storage Elements
  - Store bits
  - Addressable memories
  - Non-addressable registers
  - Loaded only as clock rises

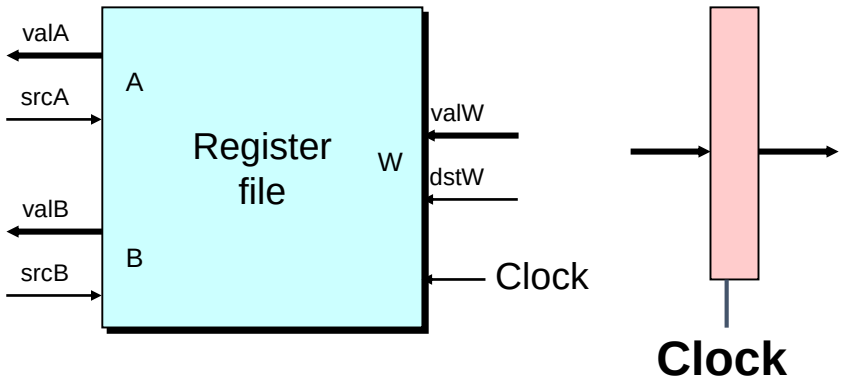

Hardware Control Language

- Very simple hardware description language
- Can only express limited aspects of hardware operation
  - Parts we want to explore and modify

- Data Types
  - `bool`: Boolean
    - `a`, `b`, `c`, …
  - `int`: words
    - `A`, `B`, `C`, …
    - Does not specify word size---bytes, 32-bit words, …

- Statements
  - `bool a = bool-expr ;`
  - `int A = int-expr ;`

HCL Operations

- Classify by type of value returned
- Boolean Expressions
  - Logic Operations
    - `a && b`, `a || b`, `!a`
  - Word Comparisons
    - `A == B`, `A != B`, `A < B`, `A <= B`, `A >= B`, `A > B`
  - Set Membership
    - `A in { B, C, D }`
      - Same as `A == B || A == C || A == D`
- Word Expressions
  - Case expressions
    - `[ a : A; b : B; c : C ]`
    - Evaluate test expressions `a`, `b`, `c`, … in sequence
    - Return word expression `A`, `B`, `C`, … for first successful test

SEQ Hardware Structure

- State
  - Program counter register (PC)
  - Condition code register (CC)
  - Register File
  - Memories
    - Access same memory space
    - Data: for reading/writing program data
    - Instruction: for reading instructions
- Instruction Flow
  - Read instruction at address specified by PC
  - Process through stages
  - Update program counter

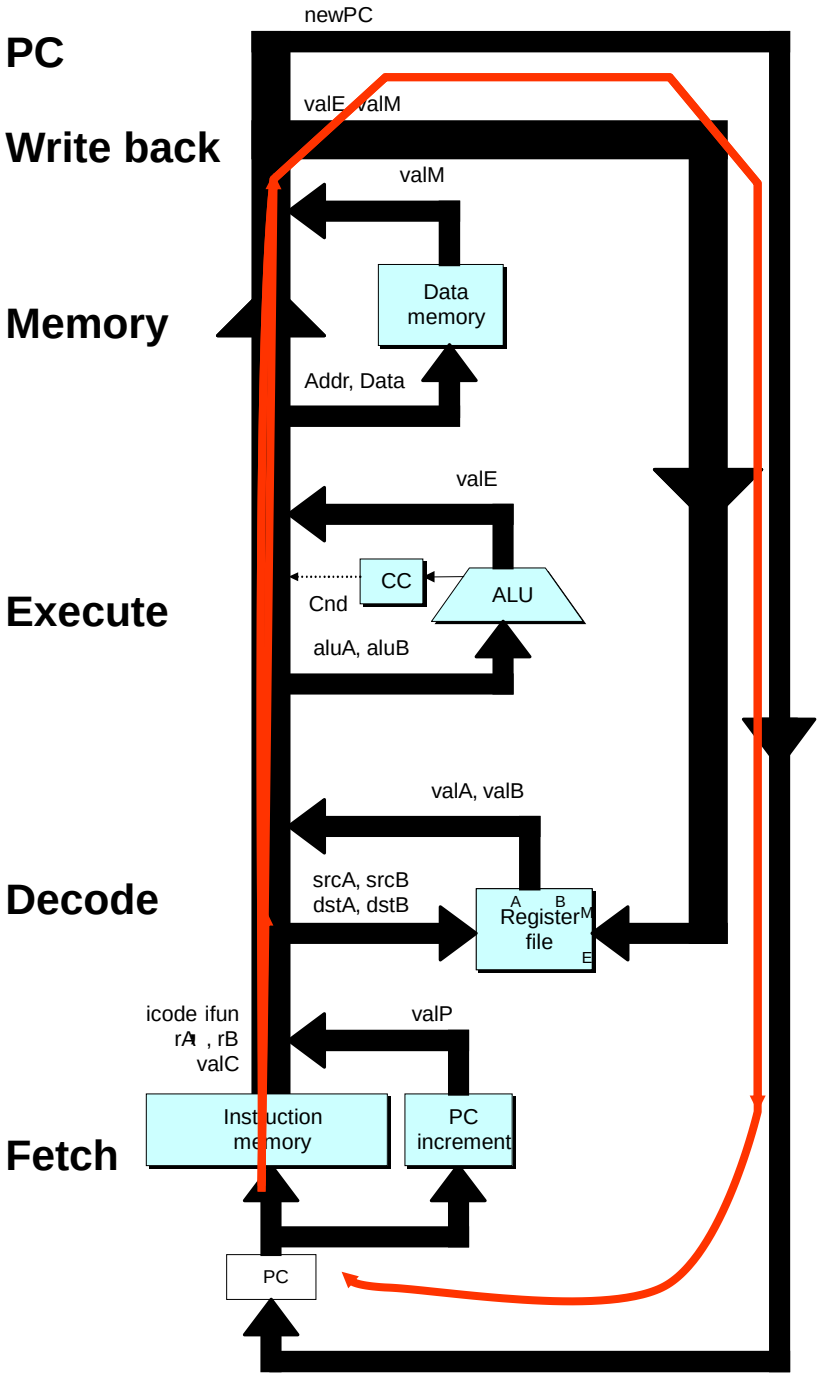

SEQ Stages

- Fetch
  - Read instruction from instruction memory
- Decode
  - Read program registers
- Execute
  - Compute value or address
- Memory
  - Read or write data
- Write Back
  - Write program registers
- PC
  - Update program counter

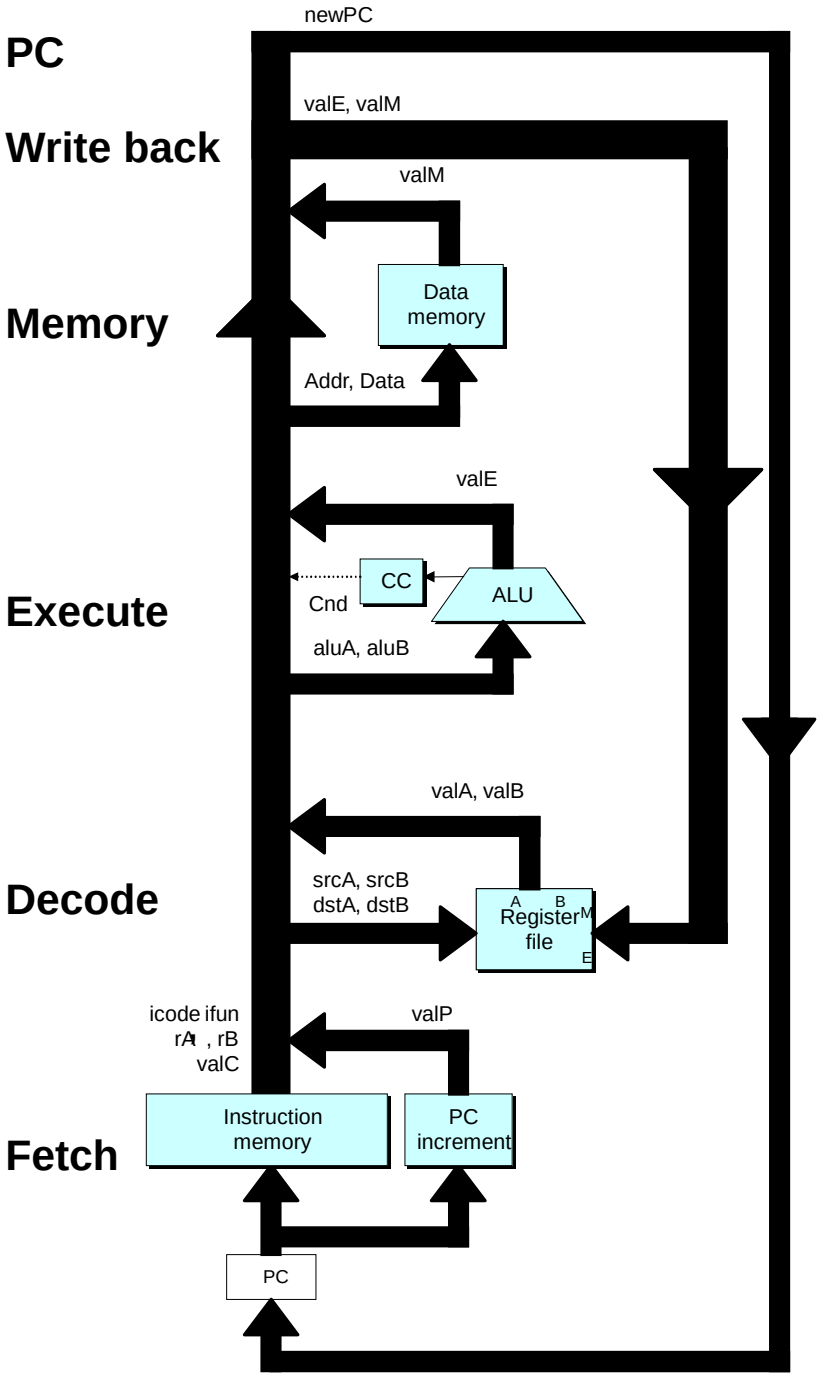

Instruction Decoding

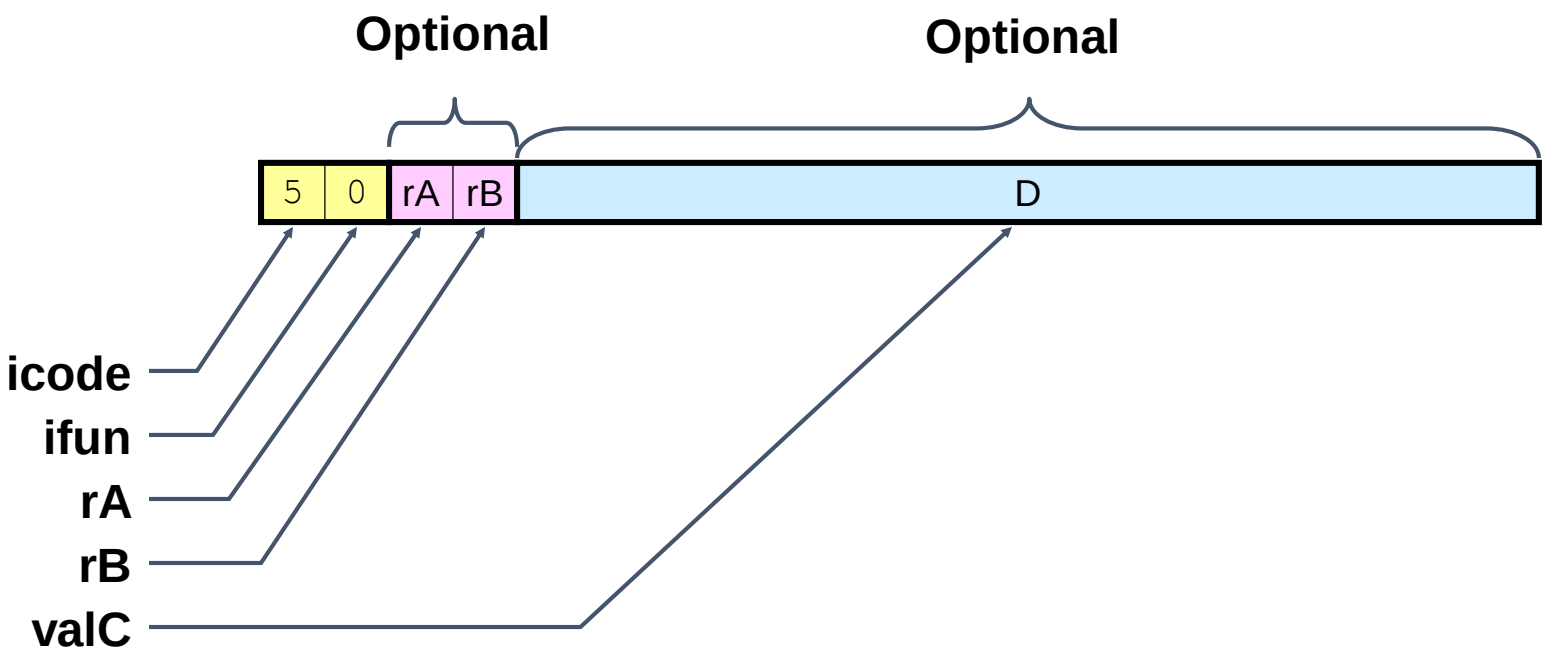

- Instruction Format
  - Instruction byte — icode:ifun
  - Optional register byte — rA:rB
  - Optional constant word — valC

Executing Arith./Logical Operation

- Fetch
  - Read 2 bytes
- Decode
  - Read operand registers
- Execute
  - Perform operation
  - Set condition codes
- Memory
  - Do nothing
- Write back
  - Update register
- PC Update
  - Increment PC by 2

Stage Computation: Arith/Log. Ops

	OPq rA, rB	
Fetch	icode:ifun ← M_1[PC]	Read instruction byte
	rA:rB ← M_1[PC+1]	Read register byte
	valP ← PC+2	Compute next PC
Decode	valA ← R[rA]	Read operand A
	valB ← R[rB]	Read operand B
Execute	valE ← valB OP valA	Perform ALU operation
	Set CC	Set condition code register
Memory		
Write back	R[rB] ← valE	Write back result
PC update	PC ← valP	Update PC

- Formulate instruction execution as sequence of simple steps
- Use same general form for all instructions

Executing `rmmovq`

- Fetch
  - Read 10 bytes
- Decode
  - Read operand registers
- Execute
  - Compute effective address
- Memory
  - Write to memory
- Write back
  - Do nothing
- PC Update
  - Increment PC by 10

Stage Computation: `rmmovq`

	`rmmovq` rA, D(rB)	
Fetch	icode:ifun ← M_1[PC]	Read instruction byte
	rA:rB ← M_1[PC+1]	Read register byte
	valC ← M_8[PC+2]	Read displacement D
	valP ← PC+10	Compute next PC
Decode	valA ← R[rA]	Read operand A
	valB ← R[rB]	Read operand B
Execute	valE ← valB + valC	Compute effective address
Memory	M_8[valE] ← valA	Write value to memory
Write back		
PC update	PC ← valP	Update PC

- Use ALU for address computation

Executing popq

- Fetch
  - Read 2 bytes
- Decode
  - Read stack pointer
- Execute
  - Increment stack pointer by 8
- Memory
  - Read from old stack pointer
- Write back
  - Update stack pointer
  - Write result to register
- PC Update
  - Increment PC by 2

Stage Computation: popq

	popq rA	
Fetch	icode:ifun ← M_1[PC]	Read instruction byte
	rA:rB ← M_1[PC+1]	Read register byte
	valP ← PC+2	Compute next PC
Decode	valA ← R[%rsp]	Read stack pointer
	valB ← R[%rsp]	Read stack pointer
Execute	valE ← valB + 8	Increment stack pointer
Memory	valM ← M_8[valA]	Read from stack
Write back	R[%rsp] ← valE	Update stack pointer
	R[rA] ← valM	Write back result
PC update	PC ← valP	Update PC

- Use ALU to increment stack pointer
- Must update two registers
  - Popped value
  - New stack pointer

Executing Conditional Moves

- Fetch
  - Read 2 bytes
- Decode
  - Read operand registers
- Execute
  - If !cnd, then set destination register to 0xF
- Memory
  - Do nothing
- Write back
  - Update register (or not)
- PC Update
  - Increment PC by 2

Stage Computation: Cond. Move

	cmovXX rA, rB	
Fetch	icode:ifun ← M_1[PC] rA:rB ← M_1[PC+1] valP ← PC+2	Read instruction byte Read register byte Compute next PC
Decode	valA ← R[rA] valB ← 0	Read operand A
Execute	valE ← valB + valA If ! Cond(CC,ifun) rB ← 0xF	Pass valA through ALU (Disable register update)
Memory		
Write back	R[rB] ← valE	Write back result
PC update	PC ← valP	Update PC

- Read register rA and pass through ALU
- Cancel move by setting destination register to 0xF
  - If condition codes & move condition indicate no move

Executing Jumps

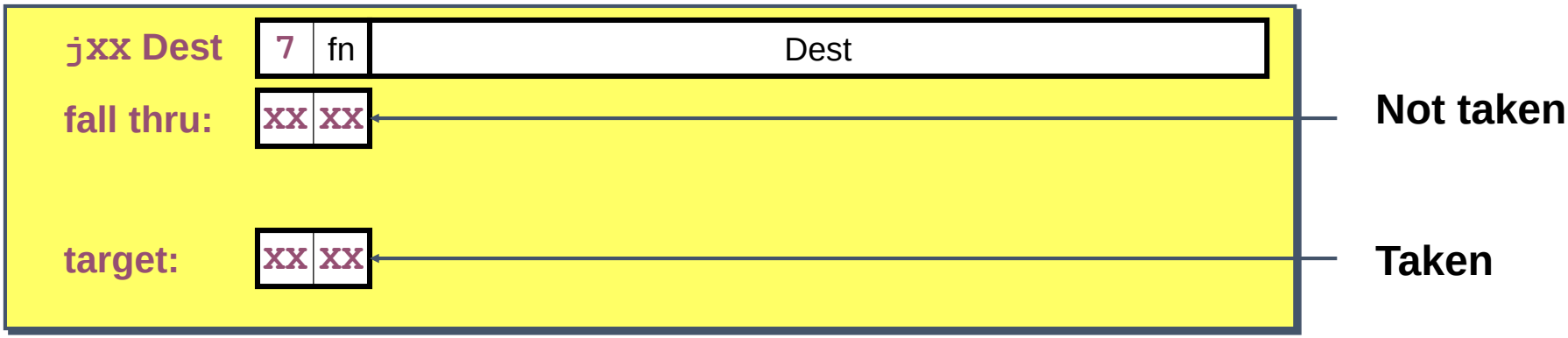

- Fetch
  - Read 9 bytes
  - Increment PC by 9
- Decode
  - Do nothing
- Execute
  - Determine whether to take branch based on jump condition and condition codes
- Memory
  - Do nothing
- Write back
  - Do nothing
- PC Update
  - Set PC to Dest if branch taken or to incremented PC if not branch

Stage Computation: Jumps

	jXX Dest	
Fetch	icode:ifun ← M_1[PC] valC ← M_8[PC+1] valP ← PC+9	Read instruction byte Read destination address Fall through address
Decode		
Execute	Cnd ← Cond(CC,ifun)	Take branch?
Memory		
Write back		
PC update	PC ← Cnd ? valC : valP	Update PC

- Compute both addresses
- Choose based on setting of condition codes and branch condition

Executing `call`

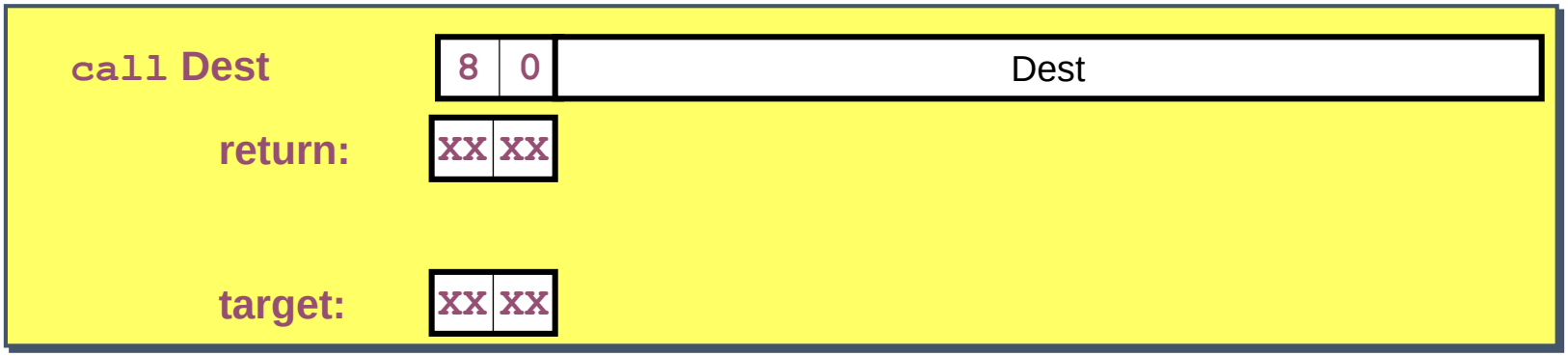

- Fetch
  - Read 9 bytes
  - Increment PC by 9
- Decode
  - Read stack pointer
- Execute
  - Decrement stack pointer by 8
- Memory
  - Write incremented PC to new value of stack pointer
- Write back
  - Update stack pointer
- PC Update
  - Set PC to Dest

Stage Computation: `call`

	`call` Dest	
Fetch	icode:ifun ← M_1[PC]	Read instruction byte
	valC ← M_8[PC+1]	Read destination address
	valP ← PC+9	Compute return point
Decode	valB ← R[`%rsp`]	Read stack pointer
Execute	valE ← valB + –8	Decrement stack pointer
Memory	M_8[valE] ← valP	Write return value on stack
Write back	R[`%rsp`] ← valE	Update stack pointer
PC update	PC ← valC	Set PC to destination

- Use ALU to decrement stack pointer
- Store incremented PC

Executing `ret`

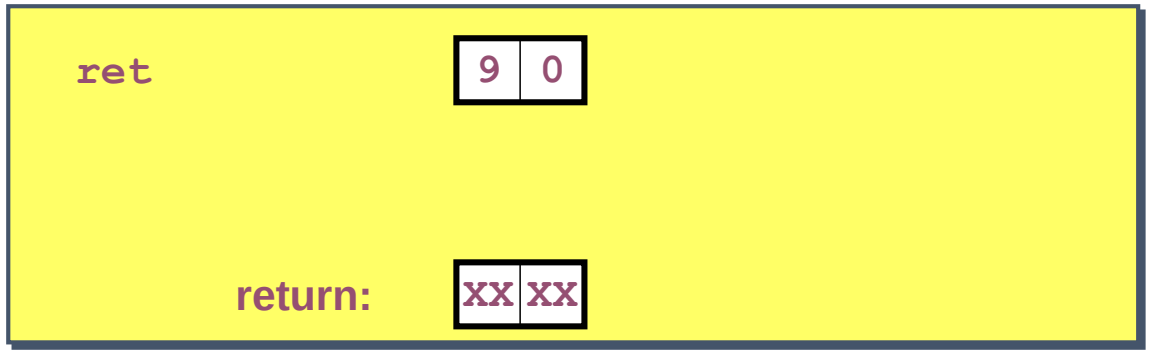

- Fetch
  - Read 1 byte
- Decode
  - Read stack pointer
- Execute
  - Increment stack pointer by 8
- Memory
  - Read return address from old stack pointer
- Write back
  - Update stack pointer
- PC Update
  - Set PC to return address

Stage Computation: `ret`

	`ret`	
Fetch	icode:ifun ← M_1[PC]	Read instruction byte
Decode	valA ← R[`%rsp`] valB ← R[`%rsp`]	Read operand stack pointer Read operand stack pointer
Execute	valE ← valB + 8	Increment stack pointer
Memory	valM ← M_8[valA]	Read return address
Write back	R[`%rsp`] ← valE	Update stack pointer
PC update	PC ← valM	Set PC to return address

- Use ALU to increment stack pointer
- Read return address from memory

Computation Steps

		OPq rA, rB	
Fetch	icode,ifun	icode:ifun ← M_1[PC]	Read instruction byte
	rA,rB	rA:rB ← M_1[PC+1]	Read register byte
	valC		[Read constant word]
	valP	valP ← PC+2	Compute next PC
Decode	valA, srcA	valA ← R[rA]	Read operand A
	valB, srcB	valB ← R[rB]	Read operand B
Execute	valE	valE ← valB OP valA	Perform ALU operation
	Cond code	Set CC	Set/use cond. code reg
Memory	valM		[Memory read/write]
Write back	dstE	R[rB] ← valE	Write back ALU result
	dstM		[Write back memory result]
PC update	PC	PC ← valP	Update PC

- All instructions follow same general pattern
- Differ in what gets computed on each step

Computation Steps

		`call` Dest	
Fetch	icode,ifun	icode:ifun ← M_1[PC]	Read instruction byte
	rA,rB		[Read register byte]
	valC	valC ← M_8[PC+1]	Read constant word
	valP	valP ← PC+9	Compute next PC
Decode	valA, srcA		[Read operand A]
	valB, srcB	valB ← R[`%rsp`]	Read operand B
Execute	valE	valE ← valB + –8	Perform ALU operation
	Cond code		[Set /use cond. code reg]
Memory	valM	M_8[valE] ← valP	Memory read/write
Write back	dstE	R[`%rsp`] ← valE	Write back ALU result
	dstM		[Write back memory result]
PC update	PC	PC ← valC	Update PC

- All instructions follow same general pattern
- Differ in what gets computed on each step

Computed Values

- Fetch

icode	Instruction code
ifun	Instruction function
rA	Instr. Register A
rB	Instr. Register B
valC	Instruction constant
valP	Incremented PC

- Decode

srcA	Register ID A
srcB	Register ID B
dstE	Destination Register E
dstM	Destination Register M
valA	Register value A
valB	Register value B

- Execute
  - valE — ALU result
  - Cnd — Branch/move flag
- Memory
  - valM — Value from memory