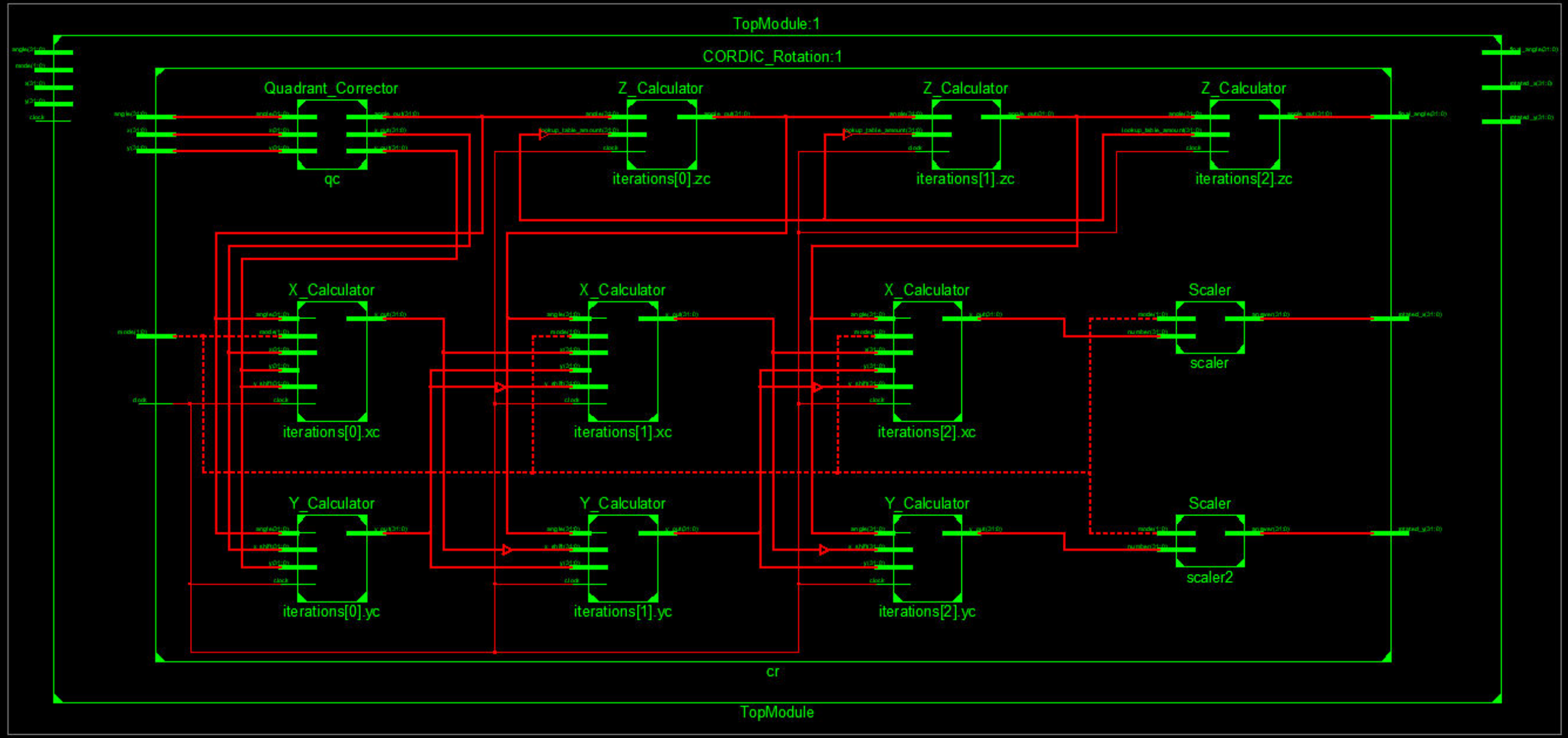
TopModule:1
CORDIC_Rotation:1
Quadrant_Corrector
qc
Z_Calculator
iterations[0].zc
Z_Calculator
iterations[1].zc
Z_Calculator
iterations[2].zc
X_Calculator
iterations[0].xc
X_Calculator
iterations[1].xc
X_Calculator
iterations[2].xc
Scaler
scaler
Y_Calculator
iterations[0].yc
Y_Calculator
iterations[1].yc
Y_Calculator
iterations[2].yc
Scaler
scaler2
cr
TopModule