	REVISION DESCRIPTION	CHECK	APP	DATE	REV. NOTICE. NO
△1					
△2					
△3					

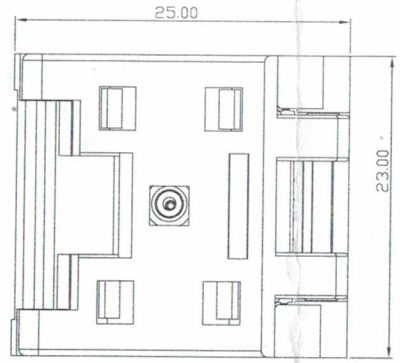

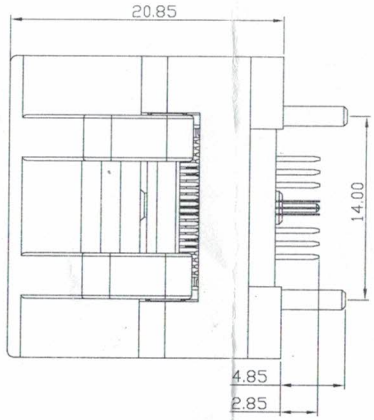

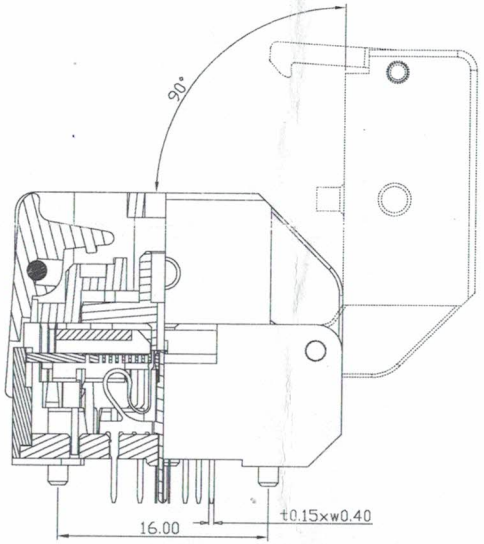

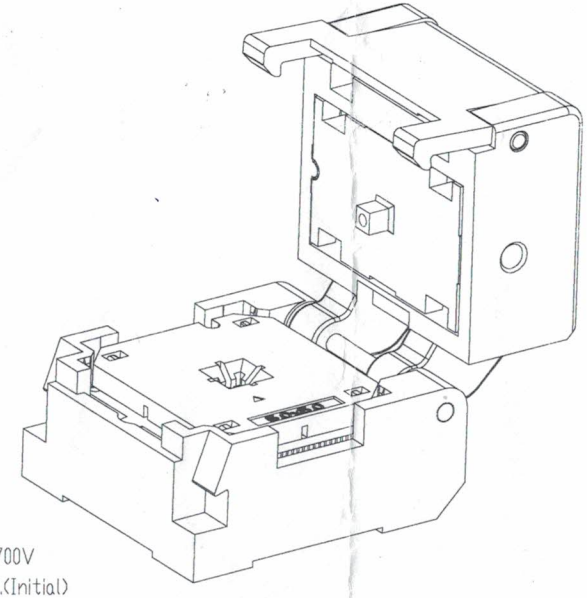

PCB Pattern(TOP View)

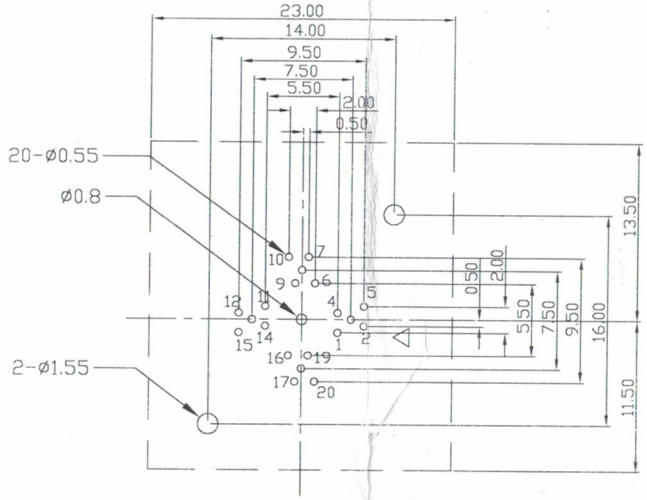

Applicable IC

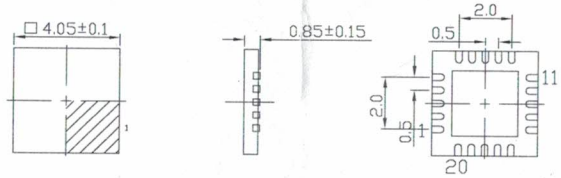

TOP VIEW SIDE VIEW BOTTOM VIEW

PERFORMANCE

1、Insulation Resistance: 1000MΩ Min.At DC 500V
2、Dielectric Withstanding Voltage For 1 Minute At AC 700V
3、Contact Resistance 30mΩ MAX. at 10mA and 20mV MAX.(Initial)
4、Current Rating: 1A max.
5、Operation Temperature -40°C ~+155°C
6、Life Span 15,000 Times (Mechanical)
7、Operation Force 2.0 Kg MAX

TOLERANCE	PROJECTION	GENERAL TOLERANCES	±0.10	TITLE	QFN20-0.5 SOCKET
		R E V	A	CLASS	QFN20-0. 5-CP02G
X. ± 0.50	DIMENSION: mm	SCALE:	1:1	DRW. NO	6U-PWQFN-0.5-20-4X4-01
X.X ± 0.25	APP:	DATE:			
X.XX ± 0.10	CHECK:	DATE:			

ANDK