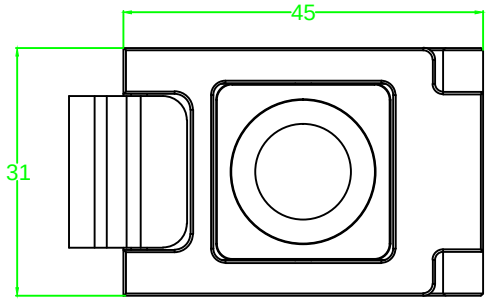

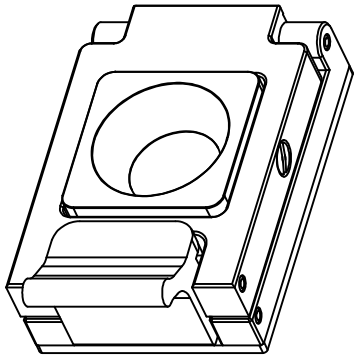

TOP VIEW

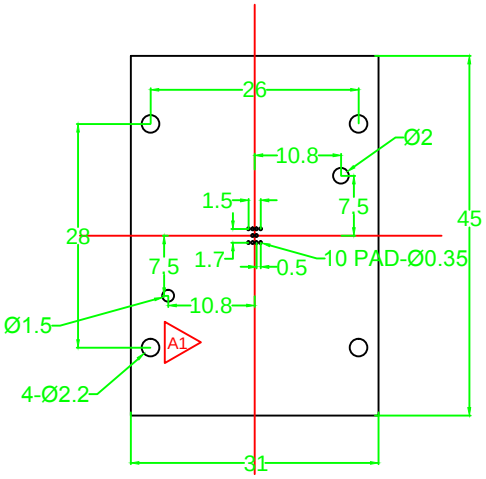

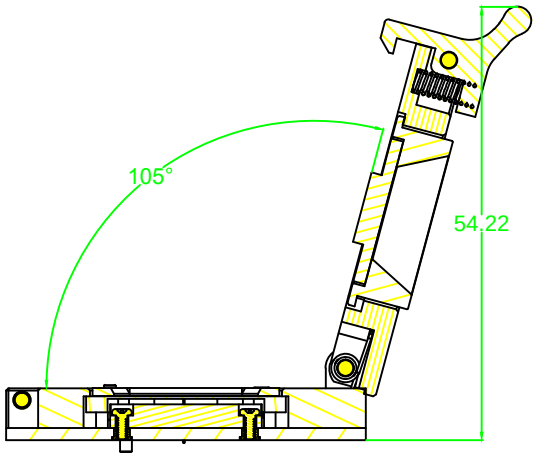

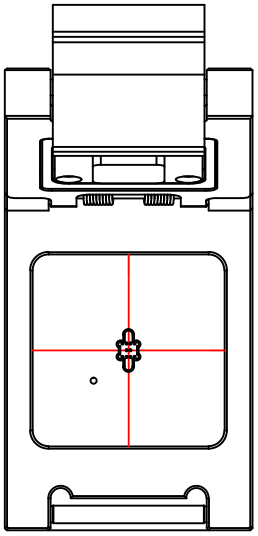

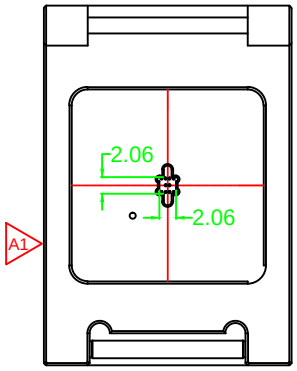

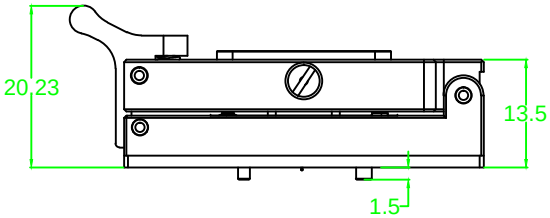

MATERIAL:
1. LID: ALLOY
2. BASE: ALLOY
3. PLUNGER: BeCu, Au on Ni Plated
4. SPRING: SWP-A/B, Au on Ni Plated

SPECIFICATION:
1. CURRENT RATING: 2A MAX
2. CONTACT RESISTANCE: 80 milliohms MAX
3. DIELECTRIC WITHSTANDING VOLTAGE: 100V AC for one minute
4. BANDWIDTH: 6.1Ghz@-2dB
5. OPERATION TEMPERATURE: -40 ~ +155
6. LIFE SPAN: 50,000 Cycles (Mechanical)

			DWG NO			PART NAME	AS-GD-QFN151-CL
			MATERIAL		SCALE 1:1	TITLE	
			QTY		UNIT mm	ALLSOCKET	
REV		DATE	SHEET		REV 01		
APPLICATION			APPROVE		DATE		
USED ON	NEXT ASSY	QTY	CHECK		DATE		
A.L.P.S ELECTRIC CO.,LTD.			CHECK		DATE		