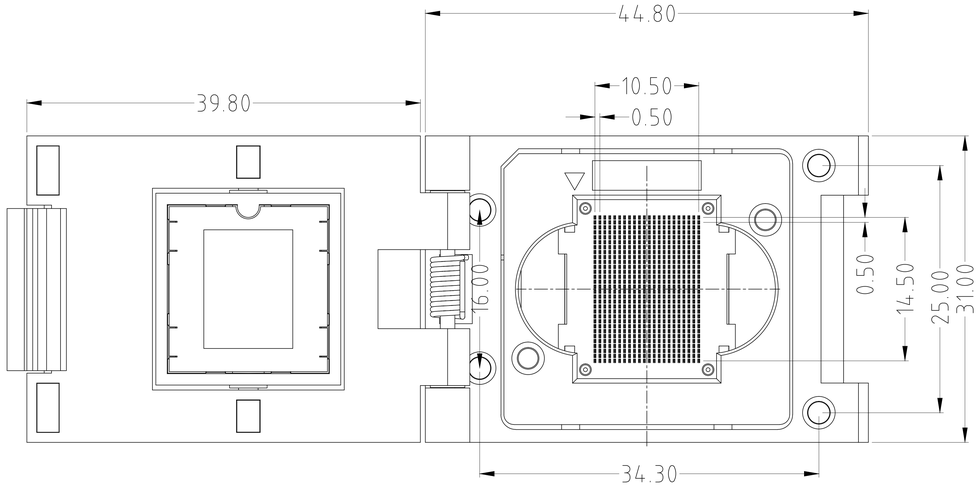

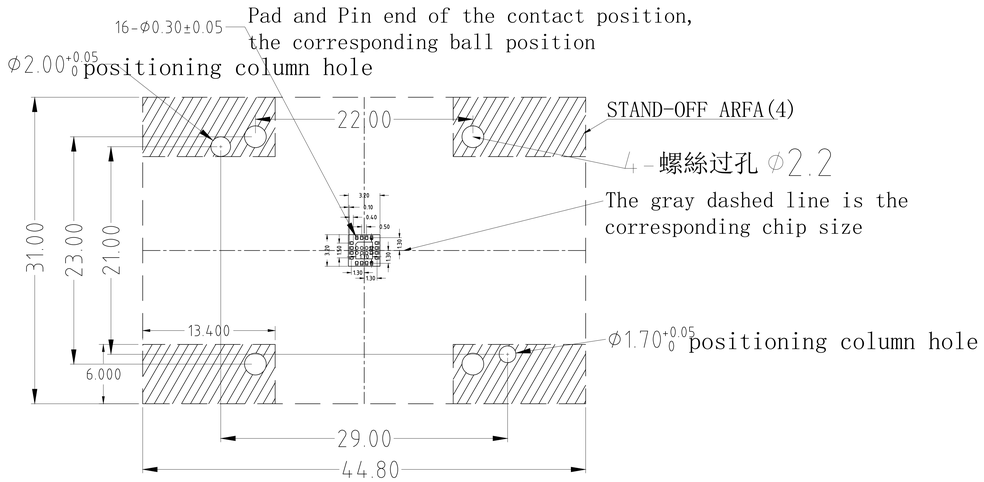

PCB PATTERN (Top View)

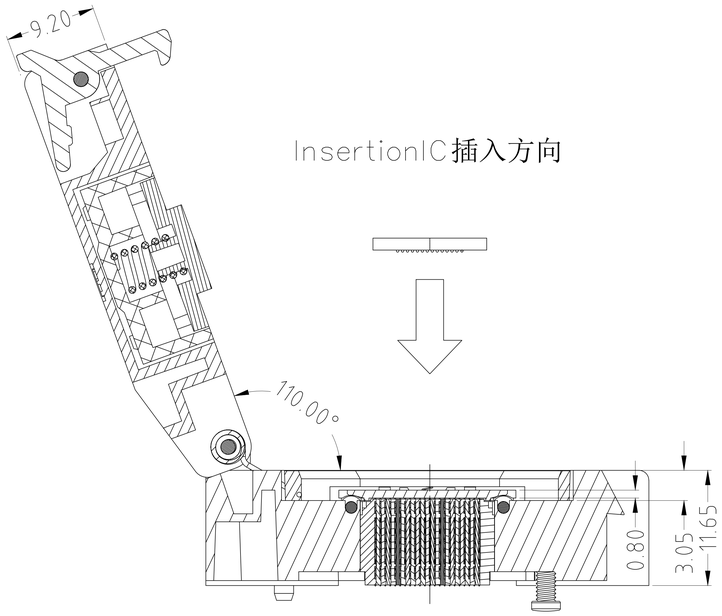

SEC.A—A

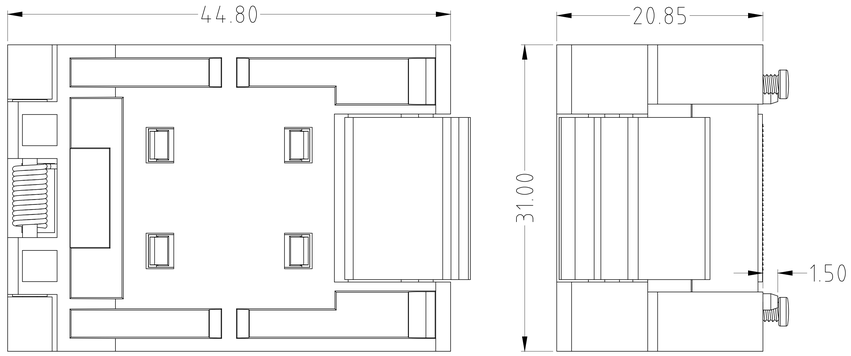

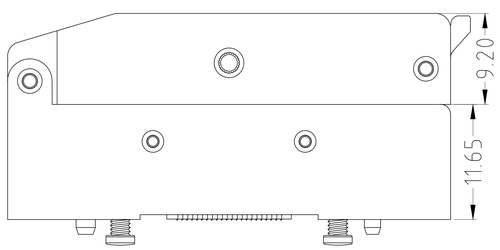

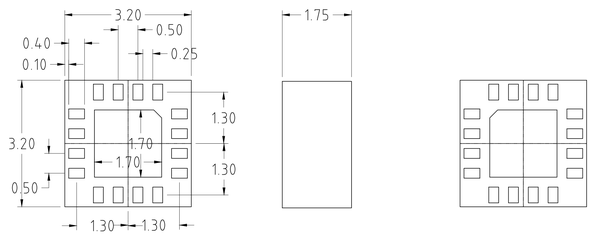

Chip

1、MATERIAL AND FINISH
- 1、SOCKET LID :PEI
- 2、SOCKET BASE :PEI
- 3、CONTACTS :BeCu,SELECTIVE Au-AuFLASH OVER NI PLATING
- 4、SPRINGS :STAINLESS STEEL ,PASSIVATED

2、PERFORMANCE
- 1、Insulation Resistance : 1000MΩ or more at DC 100V
- 2、Dielectric Withstanding Voltage: 100V AC for one minute
- 3、Contact Resistance 80mΩ, MAX. at 10mA and 20mV MAX.(Initial)
- 4、Operation Temperature -50°C~+150°C
- 5、Life Span 10,000 Times (Mechanical)
- 6、Operation Force 3.0 Kg MAX

△C				DWG NO				PART NAME	ASS51-QFN16-(3.2X3.2)-0.5-CL
△B				MATERIAL		SCALE	1:1	TITLE	
△A				QTY	1	UNIT	mm		
REV	DESCRIPTION	DATE	CHECK	SHEET	1 OF 1	REV	01		
APPLICATION				APPROVE		DATE			
ANGLES	FINISH / ROUGH EDGE	ME TRIC	0.X:±0.1	CHECK		DATE			
ALL UNSPECIFIED CHAMFERS:C0.2			0.XX:±0.05	DEGK		DATE	20190311		

3rd Angle Projection