REVISIONS				
REV	ECN	DESCRIPTION	DATE	BY
A	12-0541	INITIAL RELEASE	8/8/2012	DLC

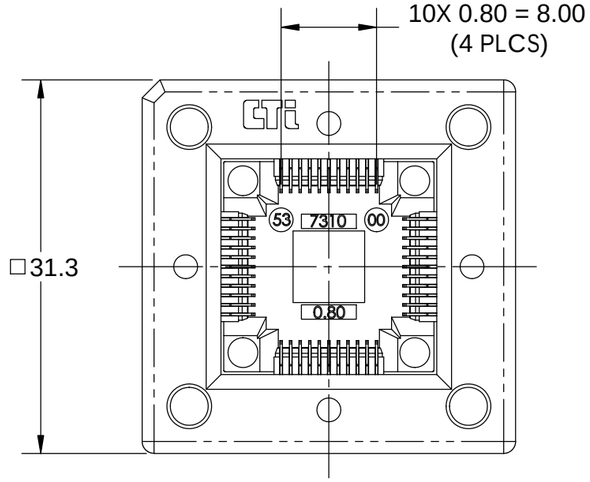

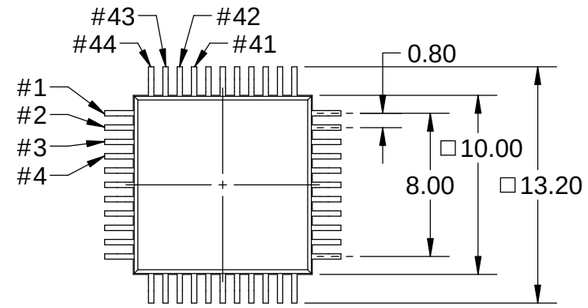

SCALE:3:1

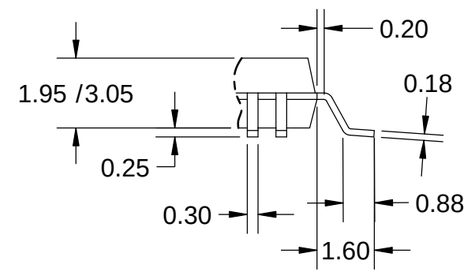

SCALE 6:1
ALL PACKAGE DIMENSIONS
ARE FOR REFERENCE ONLY

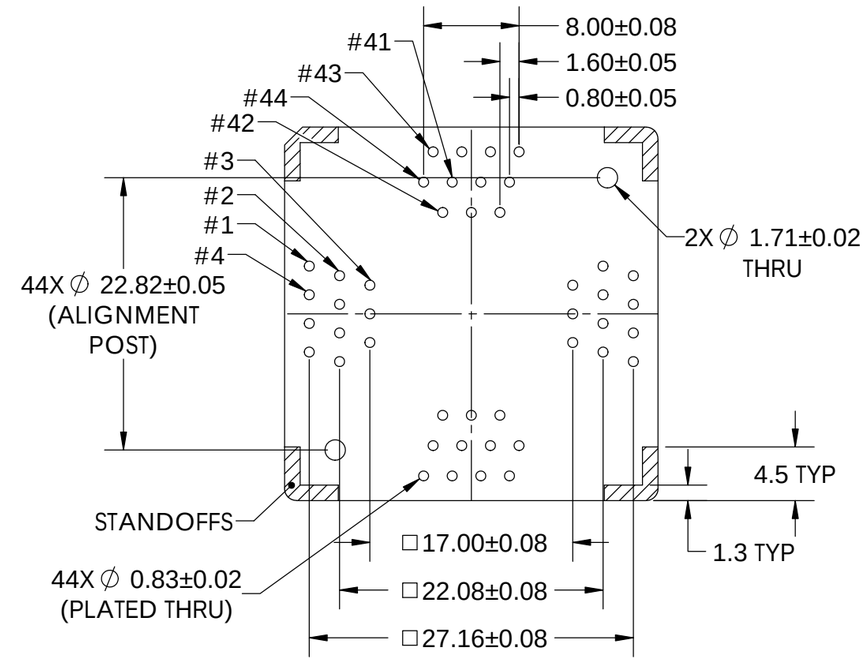

RECOMMENDED PCB HOLE PATTERN
(TOP VIEW DOWN THROUGH SOCKET)

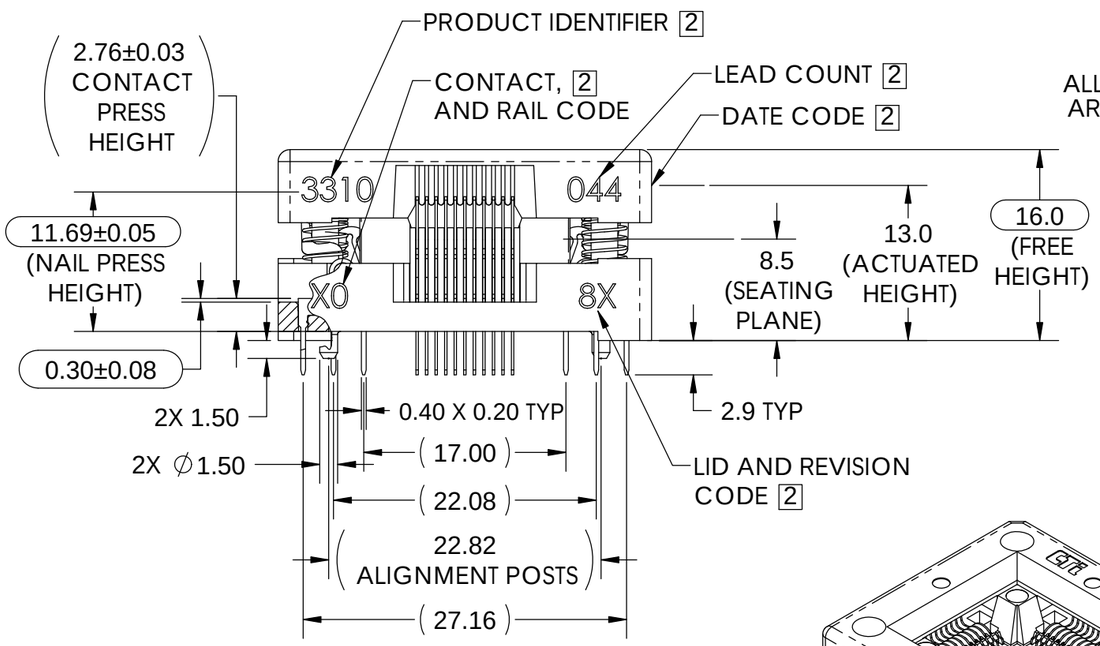

3310-044 - X - 08 X

- X (last): SOCKET ASSEMBLY REVISION
- X (after 08): CONTACT MATERIAL & PLATING
  - 0 = BeCu w/ Au (Overall) (SPECIAL ORDER)
  - 6 = BeCu w/ Au-Au FLASH
  - 7 = Pfin w/ Au-Au FLASH (SPECIAL ORDER)

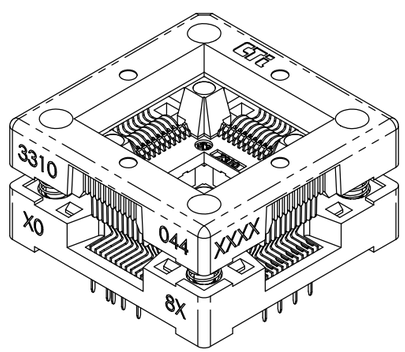

3. THIS PRODUCT IS ROHS COMPLIANT.
2 MARKING: 2.0 HIGH, COLOR - WHITE, LOCATE AS SHOWN.
1. MATERIAL AND FINISH:
SOCKET LID - POLYETHERIMIDE
SOCKET BASE - POLYETHERIMIDE
CONTACTS - SEE CHART
SPRINGS AND NAILS - STAINLESS STEEL, PASSIVATED.
NOTES, UNLESS OTHERWISE SPECIFIED:

ITEM NO.	QTY.	PART NUMBER	DESCRIPTION
5	1	001-513-35	QFP SOCKET LID
4	4	006-027-00	CORNER NAIL
3	4	2800632	SPRING, COMP., .150IN. O.D., .200IN. LEN.
2	44	002-086-XX	CONTACT, REDUCED ACTUATION FORCE
1	1	001-553-00	QFP SOCKET BASE

LEGEND: CRITICAL
03 TOTAL NO. OF USED
PROJECTION
INTERPRET DRAWING IN ACCORDANCE WITH ASME Y14.5M-1994
TOLERANCES: X.X ± 0.2, X.XX ± 0.08, X.XXX ± 0.025, ANGLE ± 1°
MATERIAL: N/A
FINISH
REFERENCE
PROJECT / SERIES: 3310
DRAWN: DLC 8/8/2012
CHECKED: BMG 8/8/2012
ENGINEER: DLC 8/8/2012
QUALITY: PDR 8/8/2012
MFG. ENGR.: PDR 8/8/2012

WELLS-CTI

TITLE: QFP SOCKET ASSEMBLY (10MM X 10MM, 44LD)
DRAWING NUMBER: 3310-044-X-08
REV.: A
SCALE: 2:1
UNITS:mm [in]
DO NOT SCALE
SHEET 1 OF 1

SIZE: B

CONFIDENTIAL/PROPRIETARY
THIS DOCUMENT CONTAINS PROPRIETARY INFORMATION OF WELLS-CTI. NOT TO BE USED, COPIED OR DISCLOSED WITHOUT PERMISSION. ALL RIGHTS RESERVED.