REVISIONS				
REV	ECO	DESCRIPTION	DATE	BY
A	085009	INITIAL RELEASE	2/25/2013	DLC

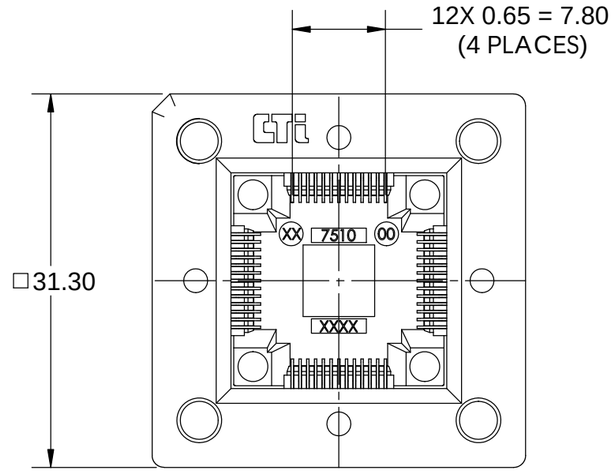

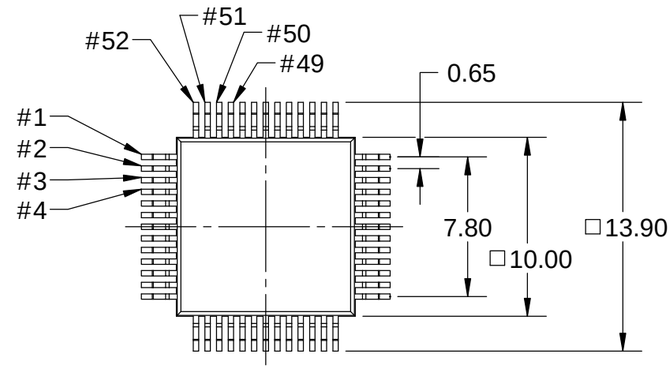

SCALE 3:1

ALL PACKAGE DIMENSIONS ARE FOR REFERENCE ONLY

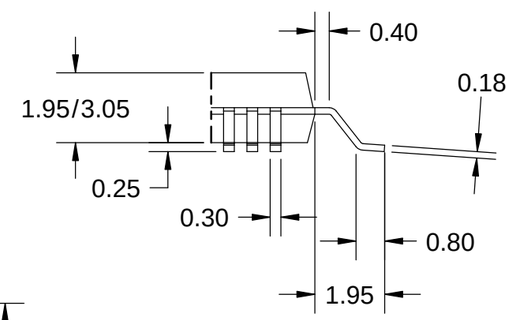

SCALE 6:1

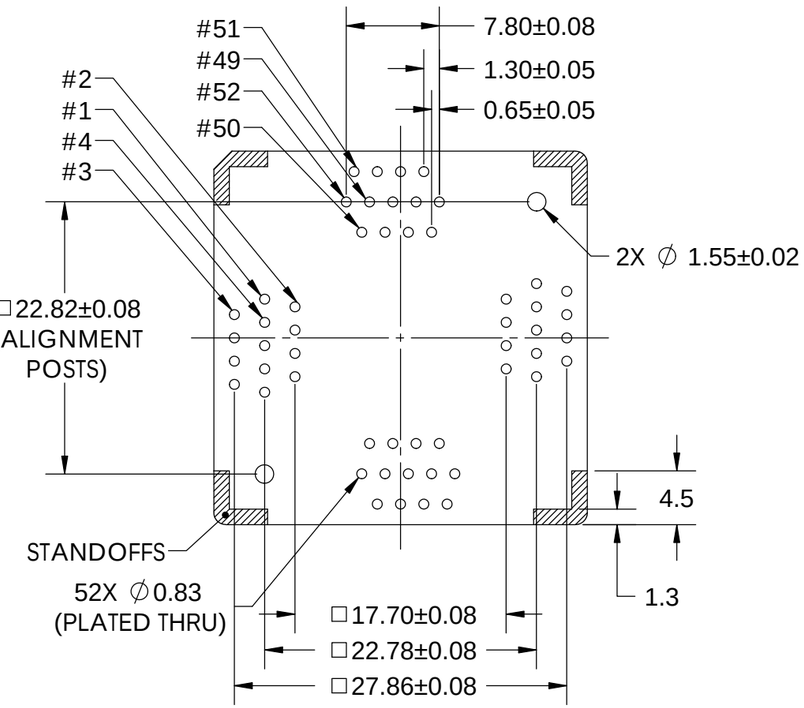

RECOMMENDED PCB HOLE PATTERN
(TOP VIEW DOWN THROUGH SOCKET)

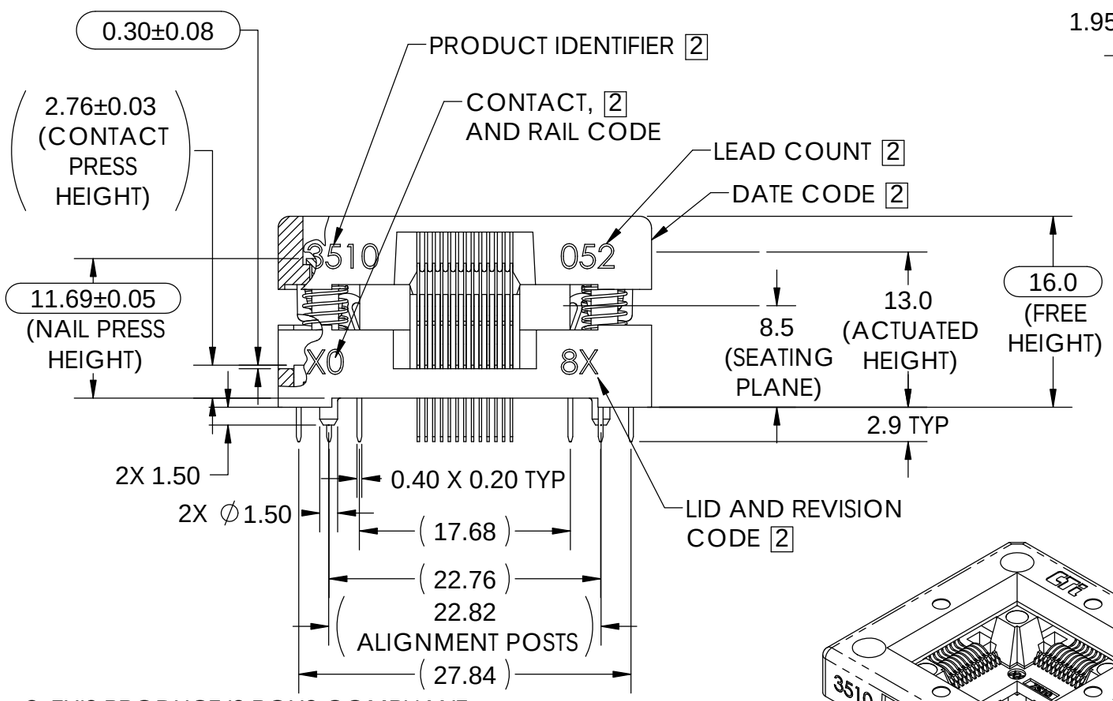

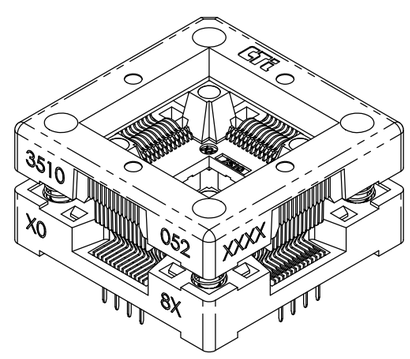

3510-052 - X - 08 X

- SOCKET ASSEMBLY REVISION
- CONTACT MATERIAL & PLATING
  - 0 = BeCu w/ Au (OVERALL) (SPECIAL ORDER)
  - 6 = BeCu w/ Au-Au FLASH
  - 7 = Pfin w/ Au-Au FLASH (SPECIAL ORDER)

ITEM NO.	QTY.	PART NUMBER	DESCRIPTION
5	4	2800632	SPRING, COMP., .150IN. O.D., .200IN. LEN.
4	4	006-027-00	CORNER NAIL
3	52	002-086-XX	CONTACT, REDUCED ACTUATION FORCE
2	1	001-513-52	QFP SOCKET LID(10mmX10mm,0.65C/C,52LD)
1	1	001-555-20	QFP SOCKET BASE(10mmX10mm,0.65C/C,52LD)

3. THIS PRODUCT IS ROHS COMPLIANT.
2 MARKING: 2.0 HIGH, COLOR - WHITE, LOCATE AS SHOWN.
1. MATERIAL AND FINISH:
   SOCKET LID AND BASE: POLYETHERIMIDE.
   CONTACTS: SEE CHART
   SPRINGS: STAINLESS STEEL, PASSIVATED.
   RIVETS: ALUMINUM # 5056.
NOTES, UNLESS OTHERWISE SPECIFIED:

LEGEND: CRITICAL
2 TOTAL NO. OF USED

INTERPRET DRAWING IN ACCORDANCE WITH ASME Y14.5M-1994

TOLERANCES: X.X ± 0.2; X.XX ± 0.08; X.XXX ± 0.025; ANGLE ± 1°

MATERIAL: N/A
FINISH: N/A
REFERENCE:
PROJECT / SERIES: 3510

DRAWN	DLC	2/25/2013
CHECKED	BMG	2/25/2013
ENGINEER	DLC	2/25/2013
QUALITY	PDR	2/25/2013
MFG. ENGR.	PDR	2/25/2013

Sensata Technologies
2102 WEST QUAIL AVE
SUITE 2
PHOENIX, AZ. 85027

TITLE: QFP SOCKET ASSEMBLY (10MM X 10MM, 52LD)
DRAWING NUMBER: 3510-052-X-08
REV.: A
SCALE: 2:1
UNITS: mm [in]
DO NOT SCALE
SHEET 1 OF 1

SIZE: B

SENSATA TECHNOLOGIES PROPRIETARY AND CONFIDENTIAL. NEITHER THIS PRINT NOR THE INFORMATION CONTAINED HEREON IS TO BE USED AGAINST THE INTERESTS OF SENSATA TECHNOLOGIES OR AGAINST THE INTERESTS OF ANY OF ITS AFFILIATED COMPANIES OR WHOLLY OWNED SUBSIDIARIES.

FOR REFERENCE ONLY, CHECK LATEST REVISION BEFORE USE.
PARTS MADE TO THIS PRINT MUST CONFORM TO E9898 REV. E.