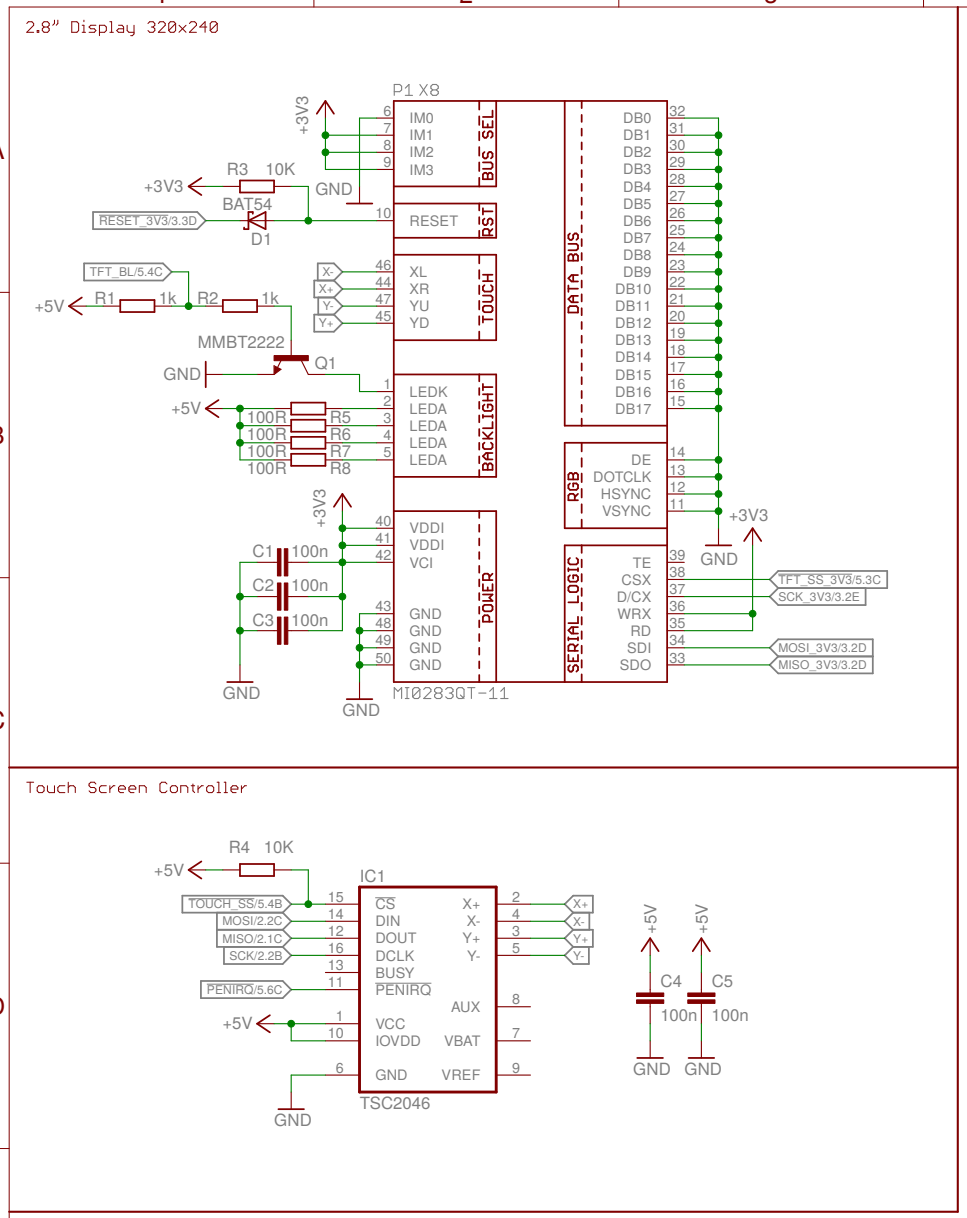

Display
Universal Access Control System

TITLE: uacs

Document Number:

REV: 1.0

Date: 11/7/14 1:13 PM

Sheet: 1/5

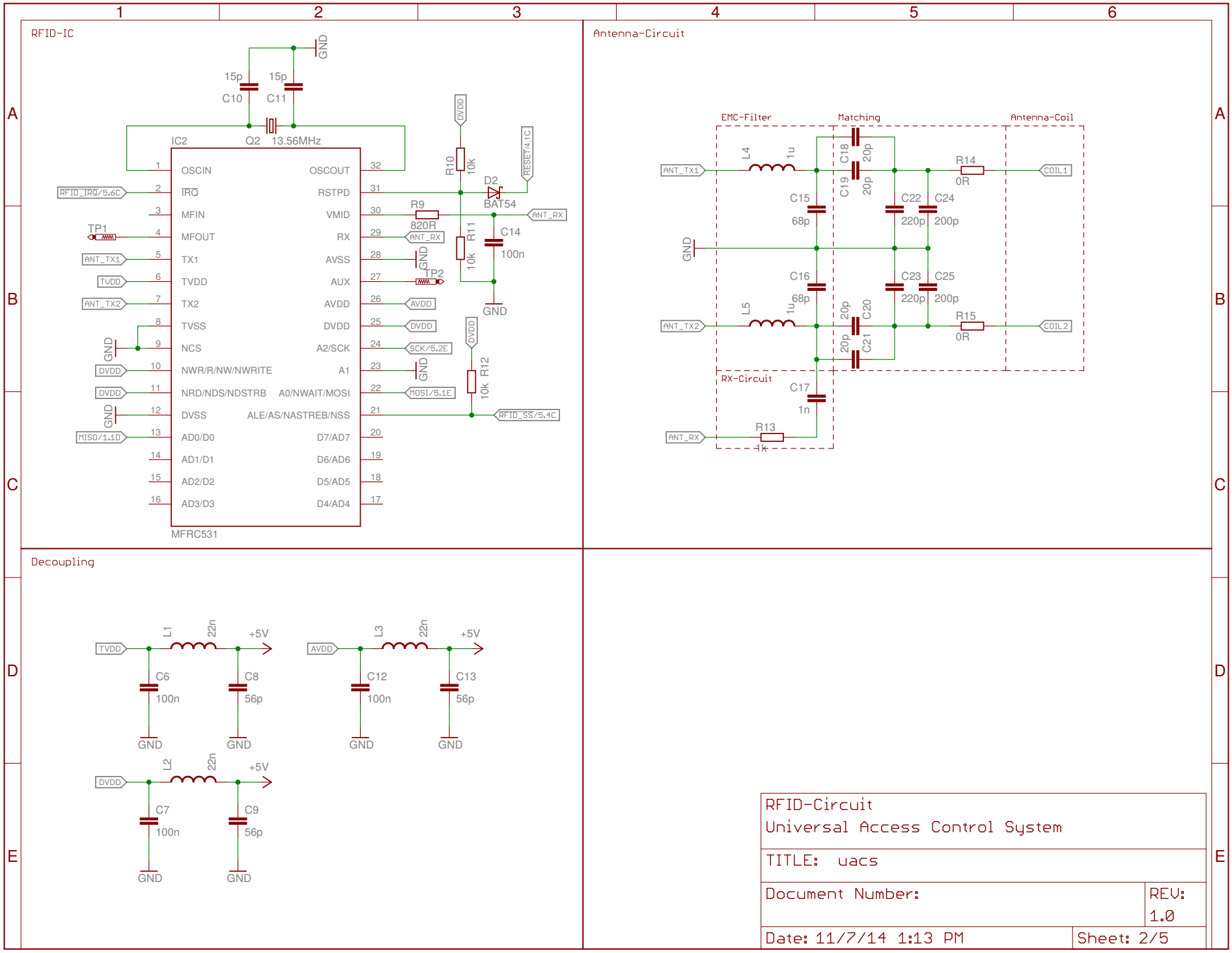
RFID-IC
IC2
MFRC531
Q2 13.56MHz
15p C10
15p C11
GND
DVDD
R10 10k
D2 BAT54
RESET4.1C
R9 820R
ANT_RX
C14 100n
R11 10k
TP1
TP2
RFID_IRQ/5.6C
ANT_TX1
TVDD
ANT_TX2
MISO/1.1D
SCK/5.2E
MOSI/5.1E
RFID_SS/5.4C
AVDD
R12 10k
OSCIN
OSCOUT
IRQ
RSTPD
MFIN
VMID
MFOUT
RX
TX1
AVSS
TVDD
AUX
TX2
AVDD
TVSS
DVDD
NCS
A2/SCK
NWR/R/NW/NWRITE
A1
NRD/NDS/NDSTRB
A0/NWAIT/MOSI
DVSS
ALE/AS/NASTREB/NSS
AD0/D0
D7/AD7
AD1/D1
D6/AD6
AD2/D2
D5/AD5
AD3/D3
D4/AD4
Antenna-Circuit
EMC-Filter
Matching
Antenna-Coil
RX-Circuit
L4 1u
L5 1u
C15 68p
C16 68p
C18 20p
C19 20p
C20 20p
C21 20p
C22 220p
C23 220p
C24 200p
C25 200p
R14 0R
R15 0R
COIL1
COIL2
C17 1n
R13 1k
Decoupling
L1 22n
L2 22n
L3 22n
+5V
C6 100n
C7 100n
C8 56p
C9 56p
C12 100n
C13 56p
RFID-Circuit
Universal Access Control System
TITLE: uacs
Document Number:
REV: 1.0
Date: 11/7/14 1:13 PM
Sheet: 2/5

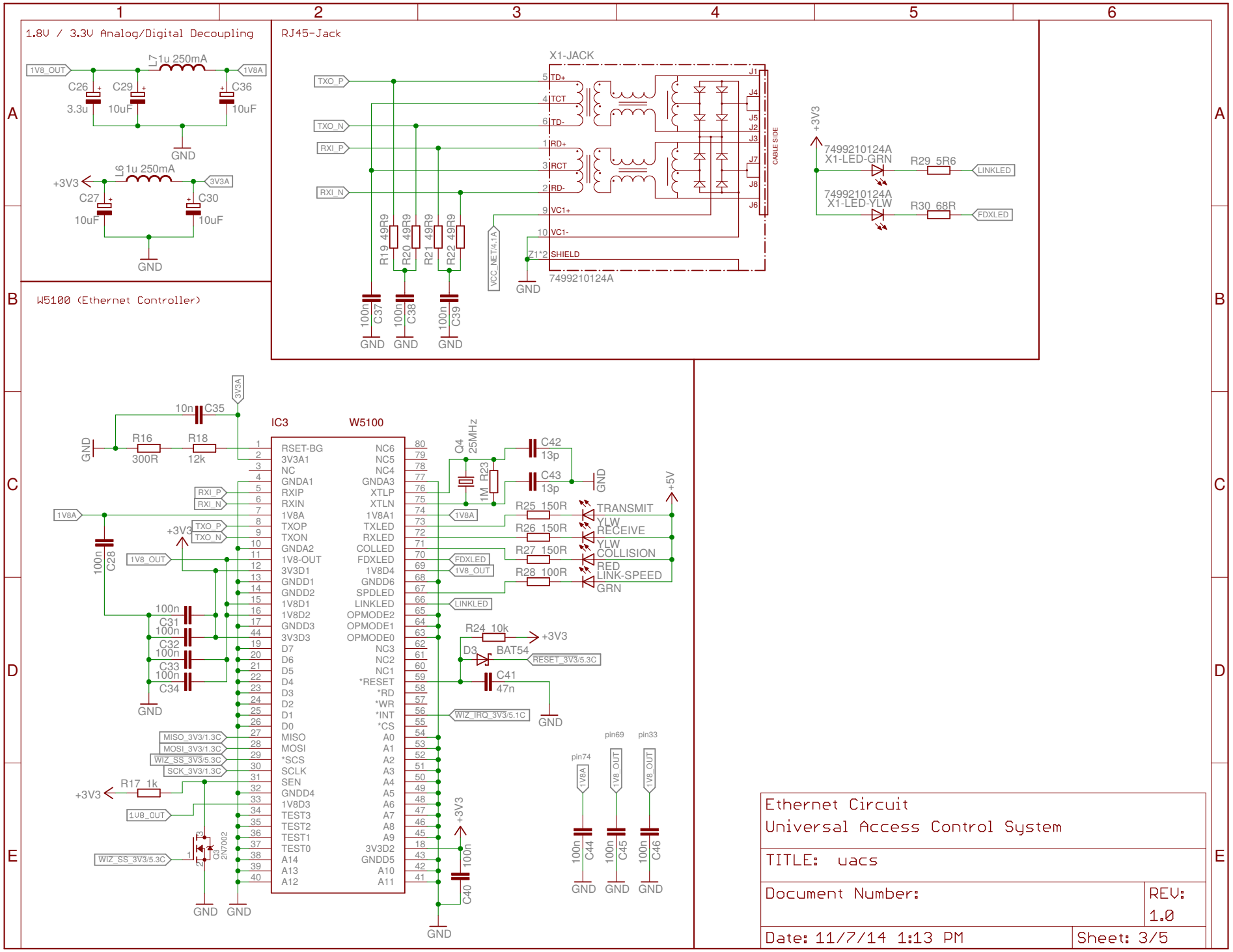

Ethernet Circuit
Universal Access Control System

TITLE: uacs

Document Number:

REV: 1.0

Date: 11/7/14 1:13 PM

Sheet: 3/5

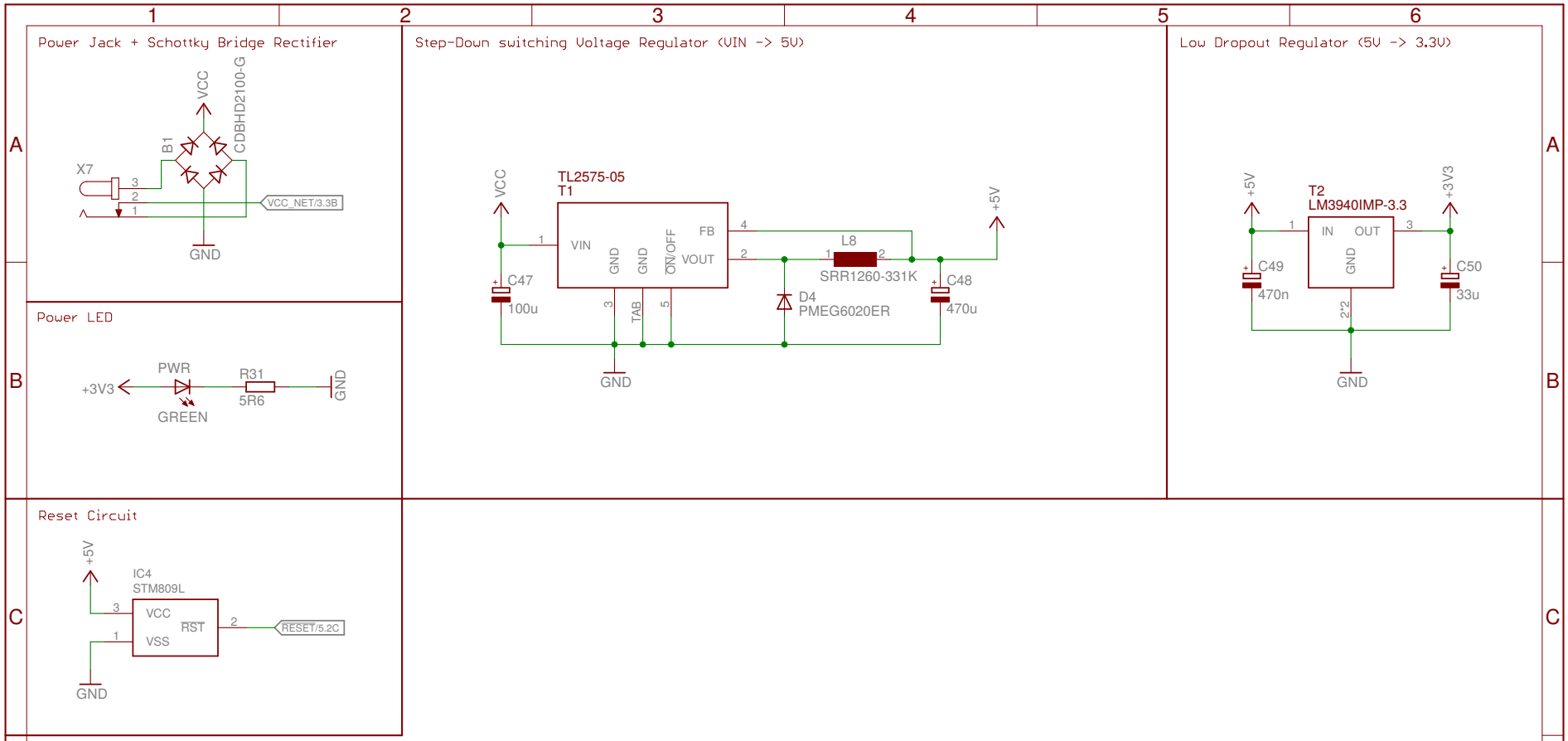

Power-Circuit
Universal Access Control System

TITLE: uacs

Document Number:

REV: V1.0

Date: 11/7/14 1:13 PM

Sheet: 4/5

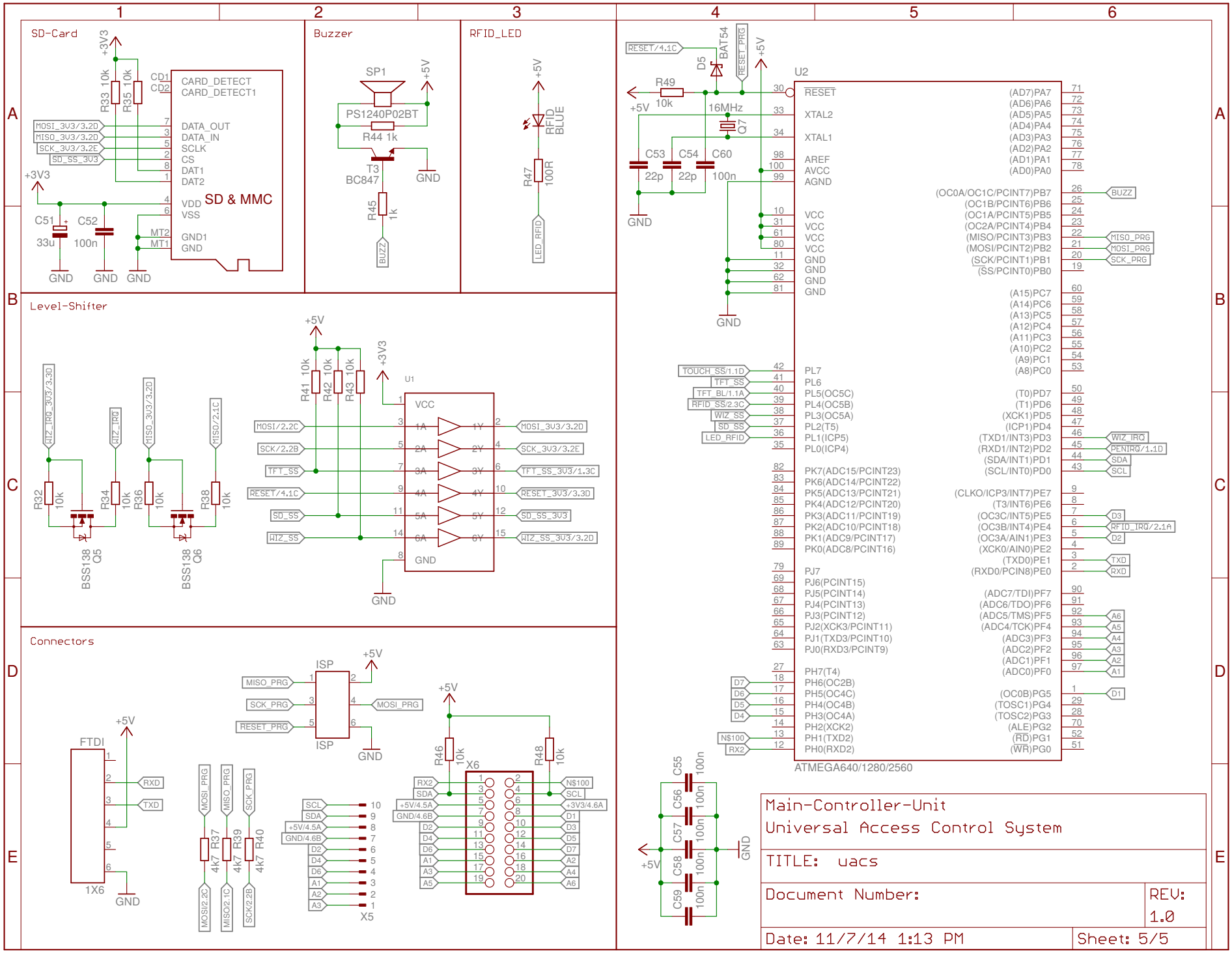
SD-Card
SD & MMC
CARD_DETECT
CARD_DETECT1
DATA_OUT
DATA_IN
SCLK
CS
DAT1
DAT2
VDD
VSS
GND1
GND
MOSI_3V3/3.2D
MISO_3V3/3.2D
SCK_3V3/3.2E
SD_SS_3V3
R33 10k
R35 10k
C51 33u
C52 100n
Buzzer
SP1
PS1240P02BT
R44 1k
T3 BC847
R45 1k
BUZZ
RFID_LED
RFID BLUE
R47 100R
LED_RFID
Level-Shifter
WIZ_IRQ_3V3/3.3D
WIZ_IRQ
MISO_3V3/3.2D
MISO/2.1C
R32 10k
R34 10k
R36 10k
R38 10k
BSS138 Q5
BSS138 Q6
R41 10k
R42 10k
R43 10k
U1
VCC
GND
MOSI/2.2C
SCK/2.2B
TFT_SS
RESET/4.1C
SD_SS
WIZ_SS
MOSI_3V3/3.2D
SCK_3V3/3.2E
TFT_SS_3V3/1.3C
RESET_3V3/3.3D
SD_SS_3V3
WIZ_SS_3V3/3.2D
Connectors
FTDI
1X6
RXD
TXD
ISP
MISO_PRG
SCK_PRG
RESET_PRG
MOSI_PRG
R37 4k7
R39 4k7
R40 4k7
MOSI/2.2C
MISO/2.1C
SCK/2.2B
X5
R46 10k
R48 10k
X6
RX2
SDA
+5V/4.5A
GND/4.6B
D2
D4
D6
A1
A3
A5
N$100
SCL
+3V3/4.6A
D1
D3
D5
D7
A2
A4
A6
RESET/4.1C
BAT54 D5
RESET_PRG
R49 10k
16MHz Q7
C53 22p
C54 22p
C60 100n
U2
ATMEGA640/1280/2560
RESET
XTAL2
XTAL1
AREF
AVCC
AGND
VCC
GND
TOUCH_SS/1.1D
TFT_SS
TFT_BL/1.1A
RFID_SS/2.3C
WIZ_SS
SD_SS
LED_RFID
BUZZ
MISO_PRG
MOSI_PRG
SCK_PRG
WIZ_IRQ
PENIRQ/1.1D
SDA
SCL
D3
RFID_IRQ/2.1A
D2
TXD
RXD
A6
A5
A4
A3
A2
A1
D1
N$100
RX2
C55 100n
C56 100n
C57 100n
C58 100n
C59 100n
Main-Controller-Unit
Universal Access Control System
TITLE: uacs
Document Number:
REV: 1.0
Date: 11/7/14 1:13 PM
Sheet: 5/5