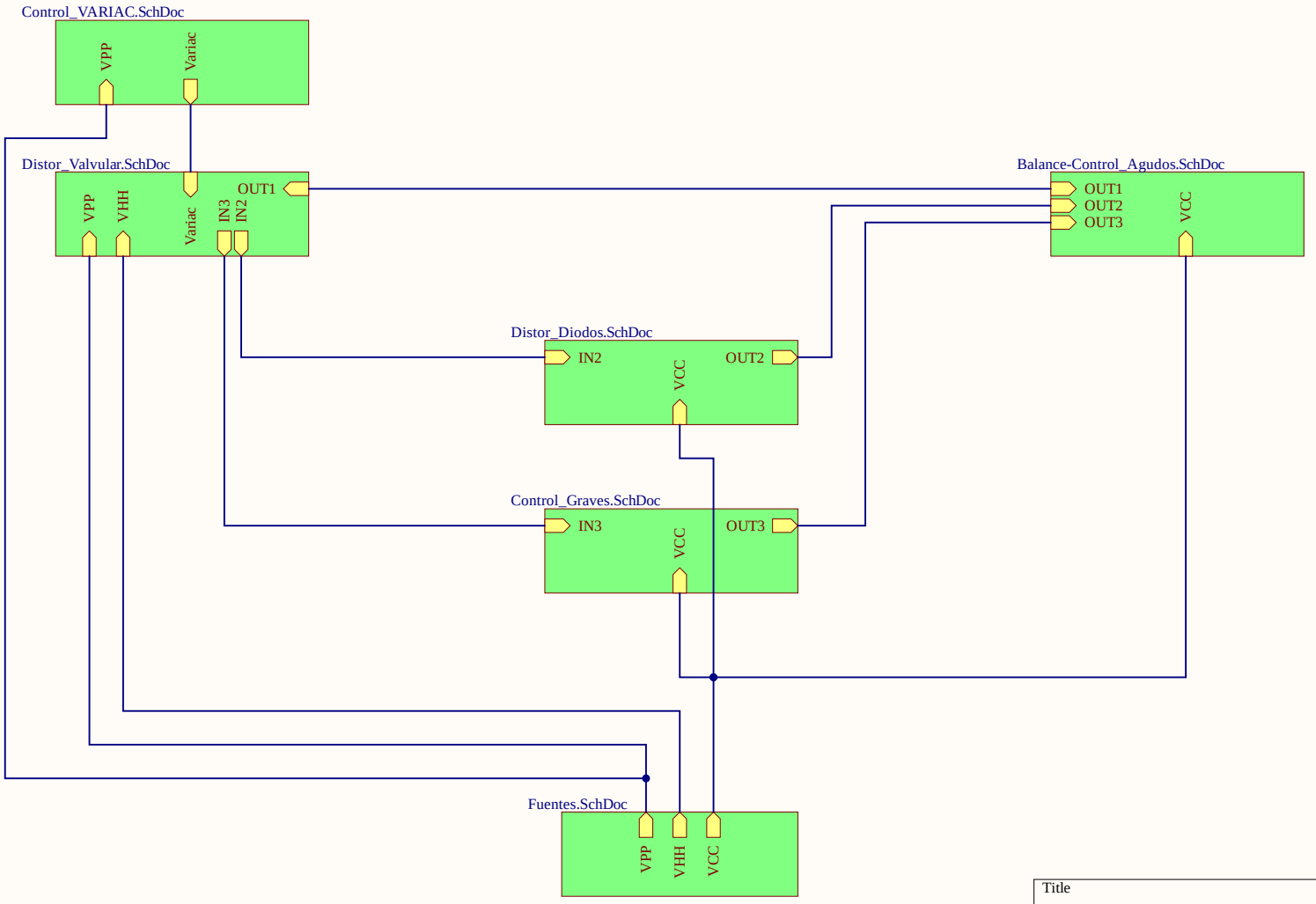

Title		
Size A4	Number	Revision
Date: 4/26/2026		Sheet of
File: MAIN.SchDoc		Drawn By:

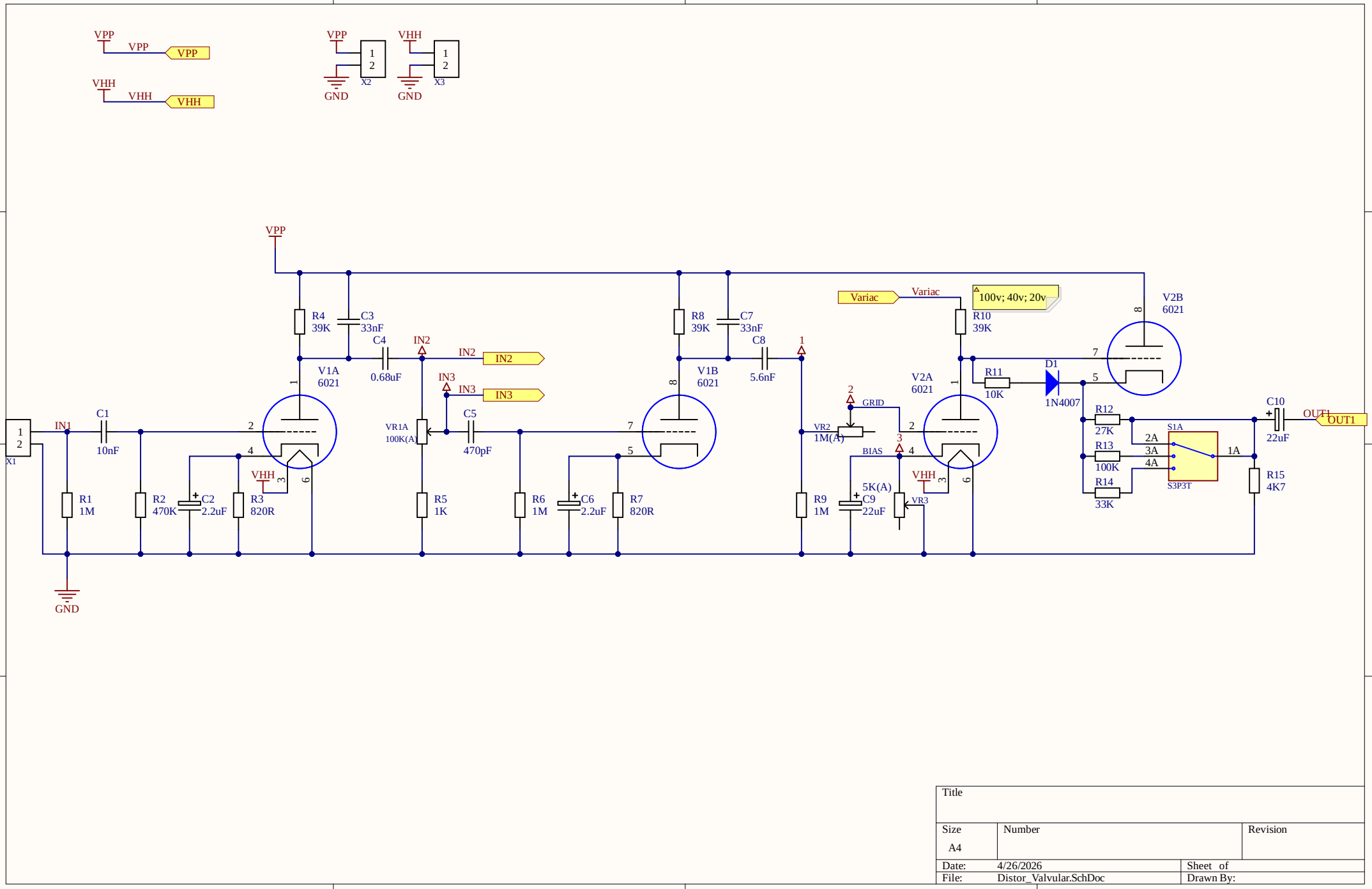

Title		
Size A4	Number	Revision
Date: 4/26/2026		Sheet of
File: Distor_Valvular.SchDoc		Drawn By:

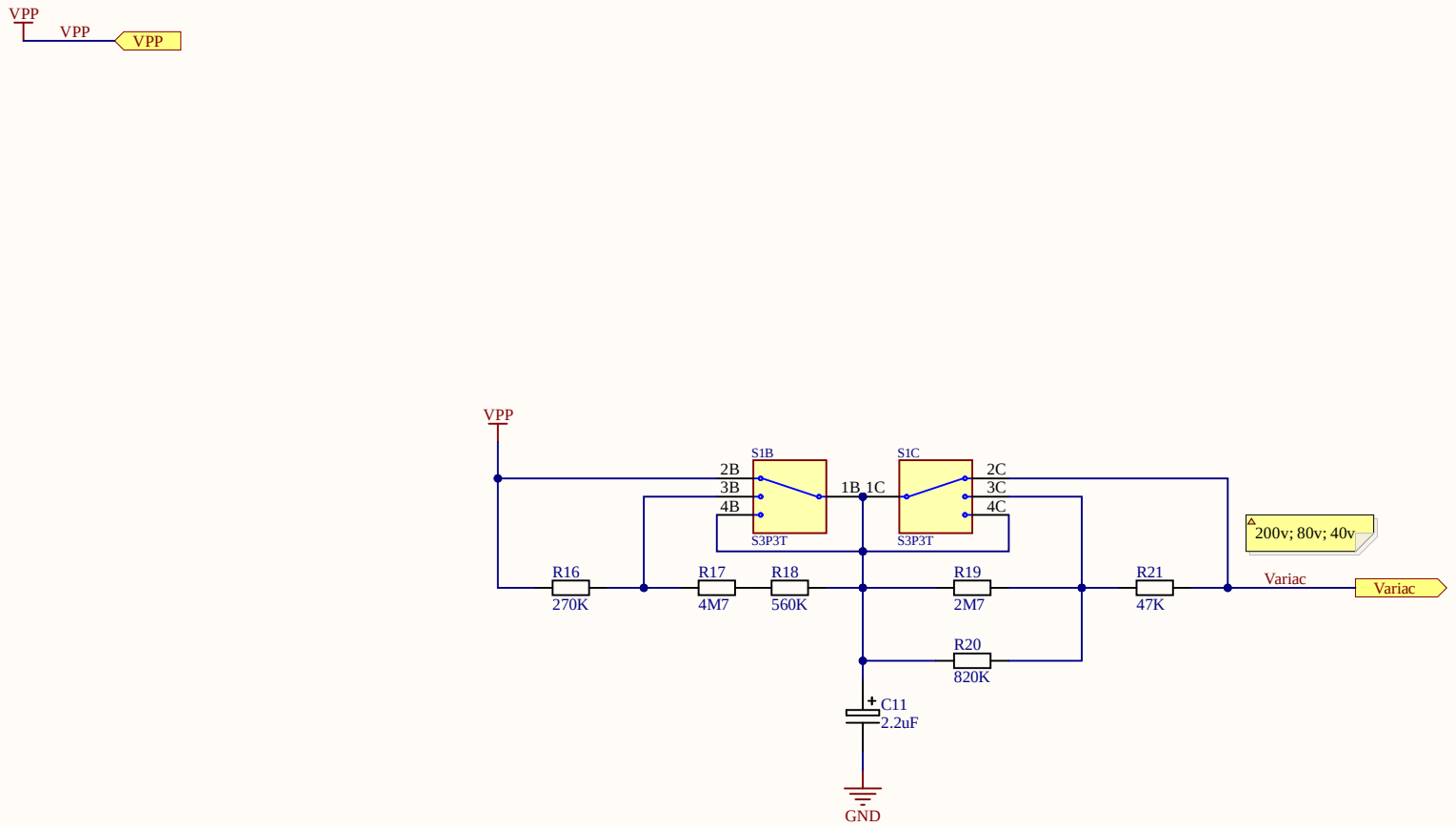

Title		
Size A4	Number	Revision
Date: 4/26/2026		Sheet of
File: Control_VARIAC.SchDoc		Drawn By:

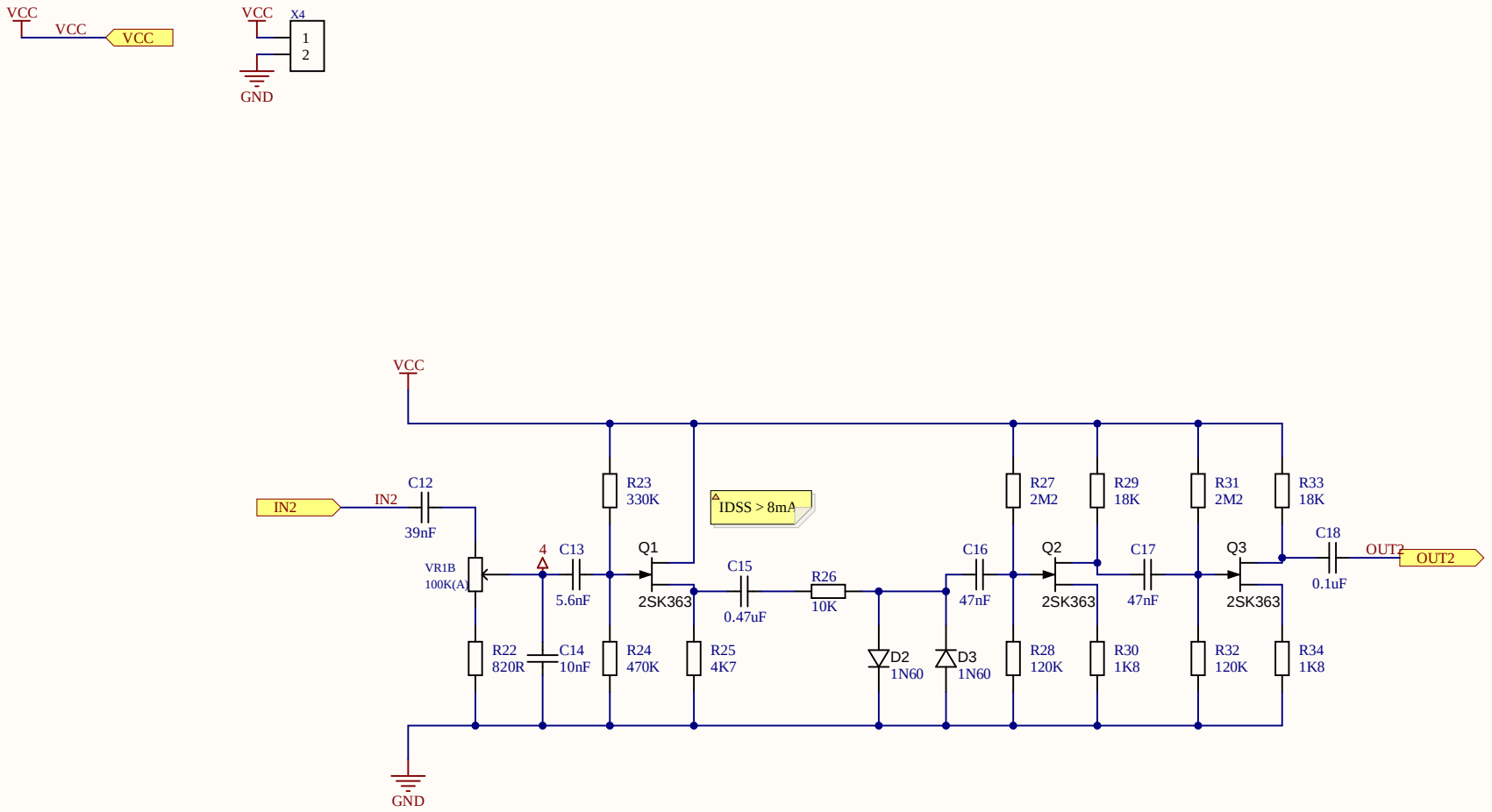

Title		
Size A4	Number	Revision
Date: 4/26/2026		Sheet of
File: Distor_Diodos.SchDoc		Drawn By:

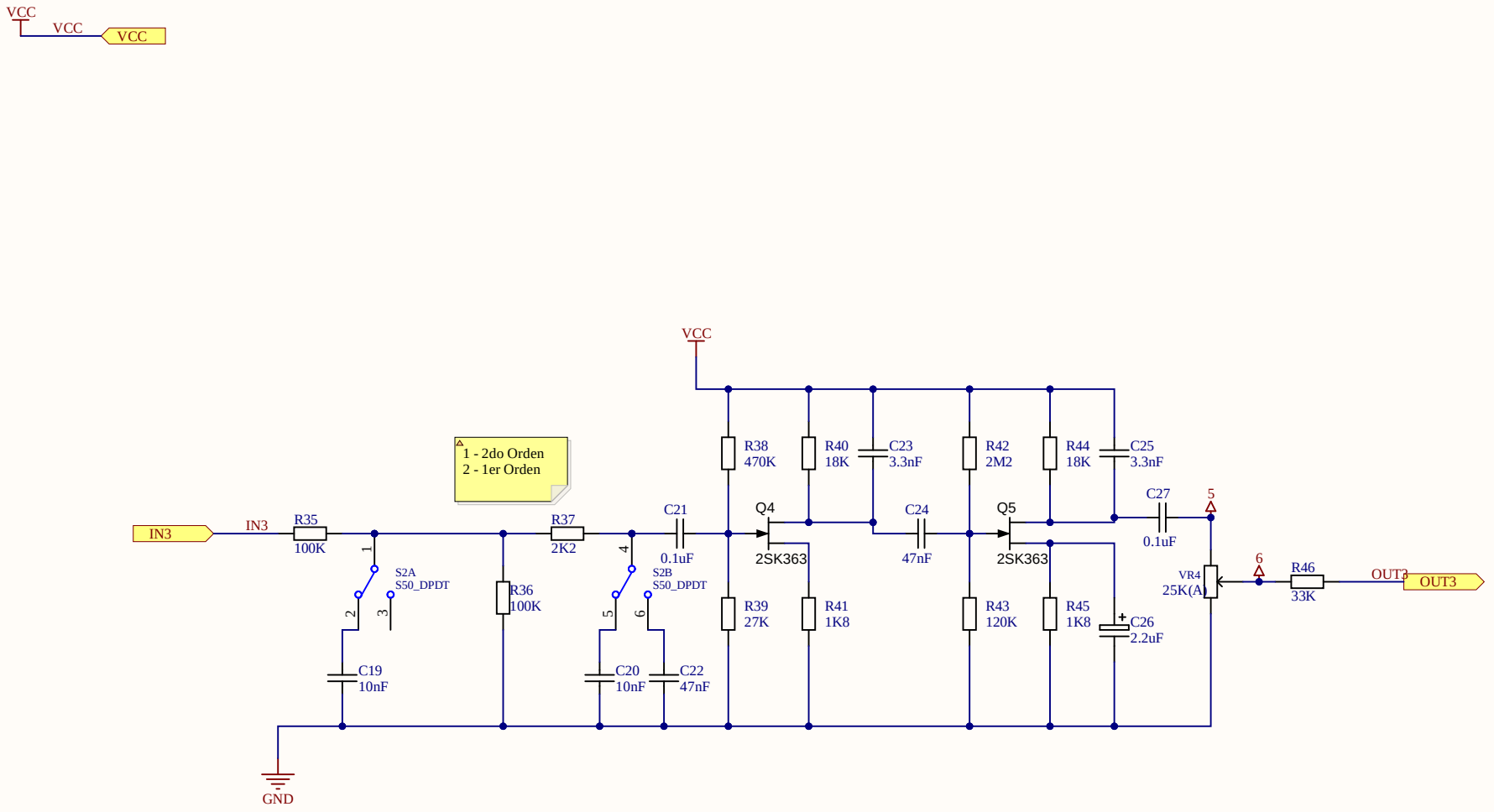

Title		
Size A4	Number	Revision
Date: 4/26/2026		Sheet of
File: Control_Graves.SchDoc		Drawn By:

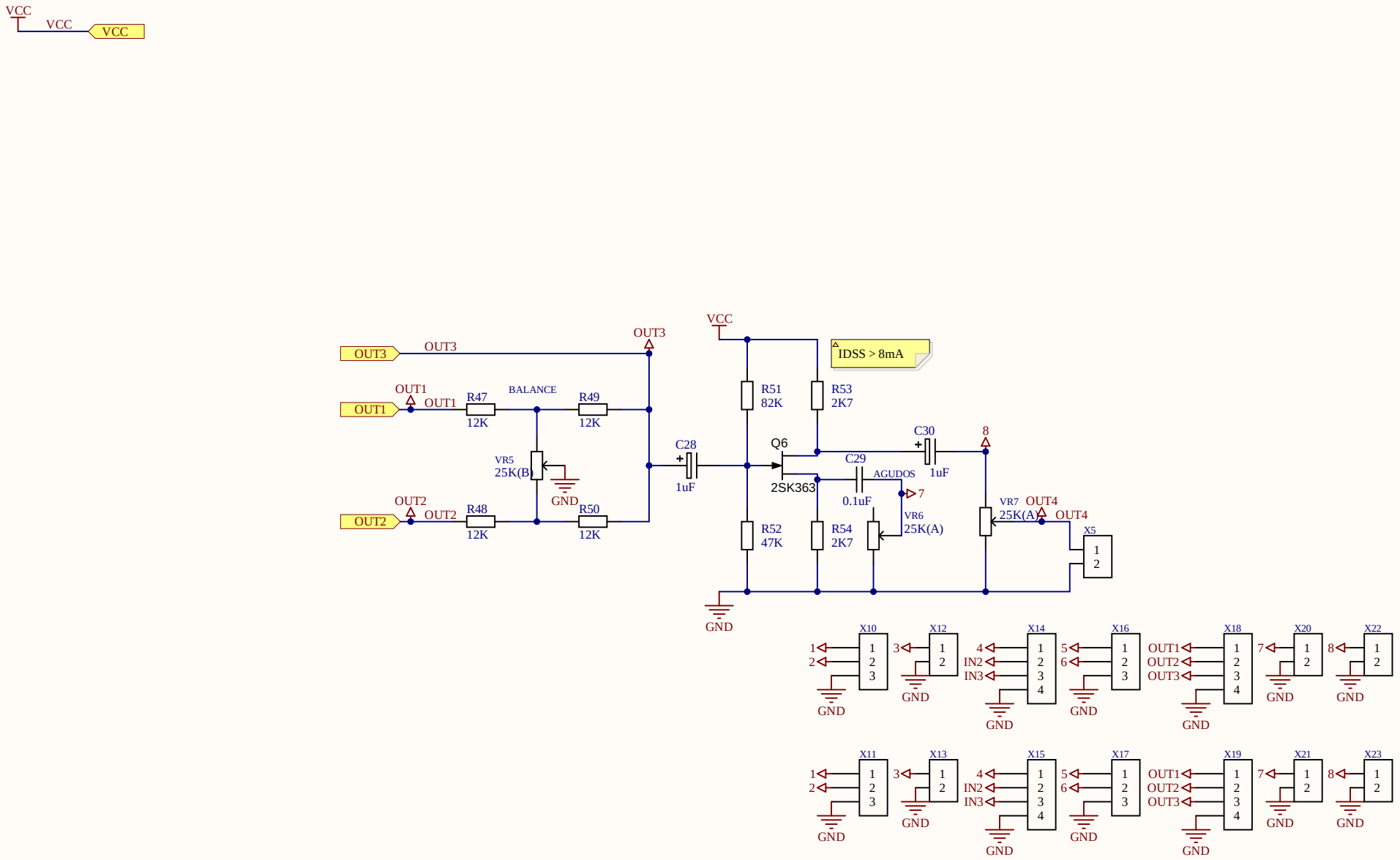

Title		
Size A4	Number	Revision
Date: 4/26/2026		Sheet of
File: Balance-Control_Agudos.SchDoc		Drawn By:

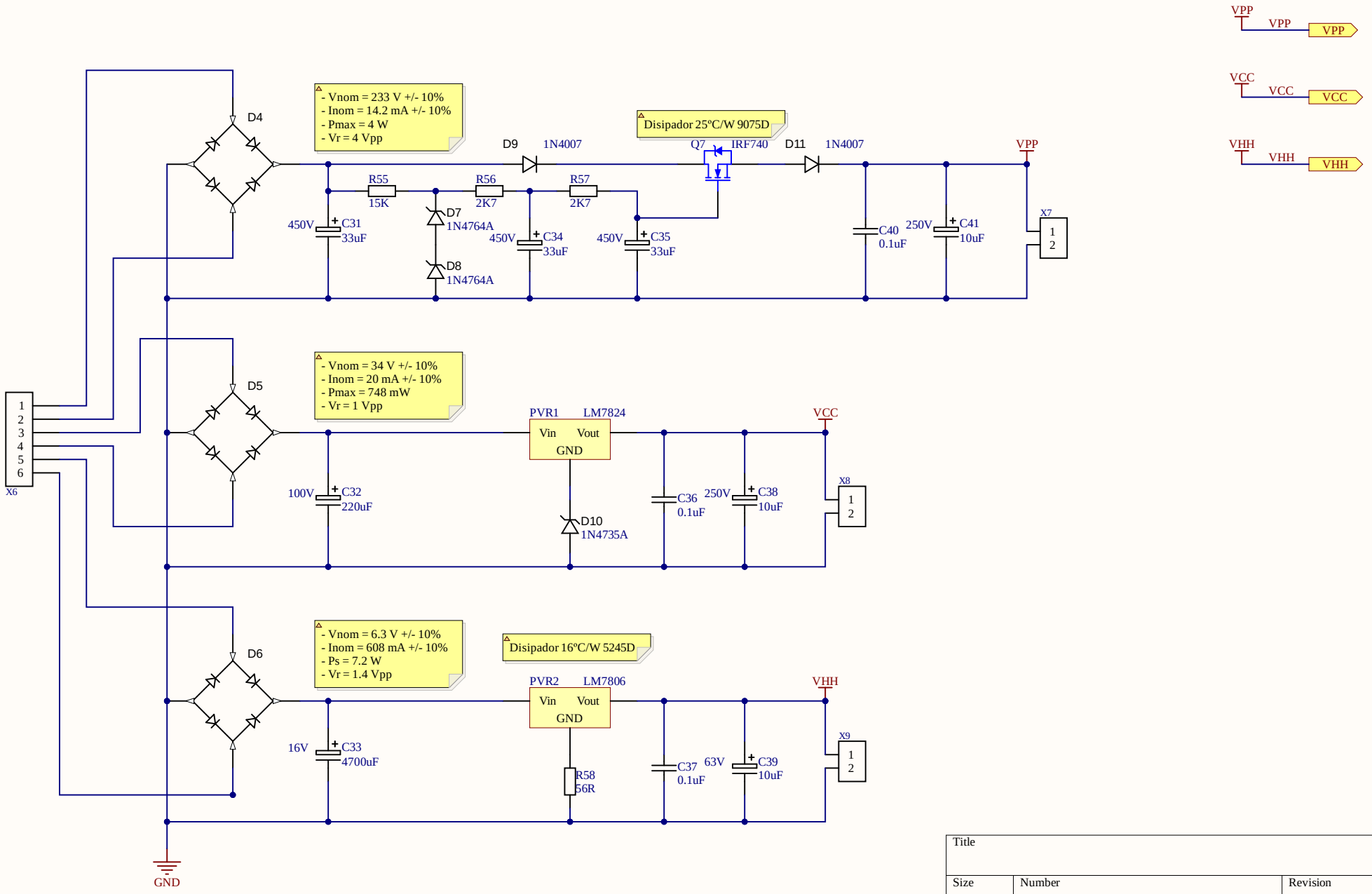

Title		
Size A4	Number	Revision
Date: 4/26/2026		Sheet of
File: Fuentes.SchDoc		Drawn By: