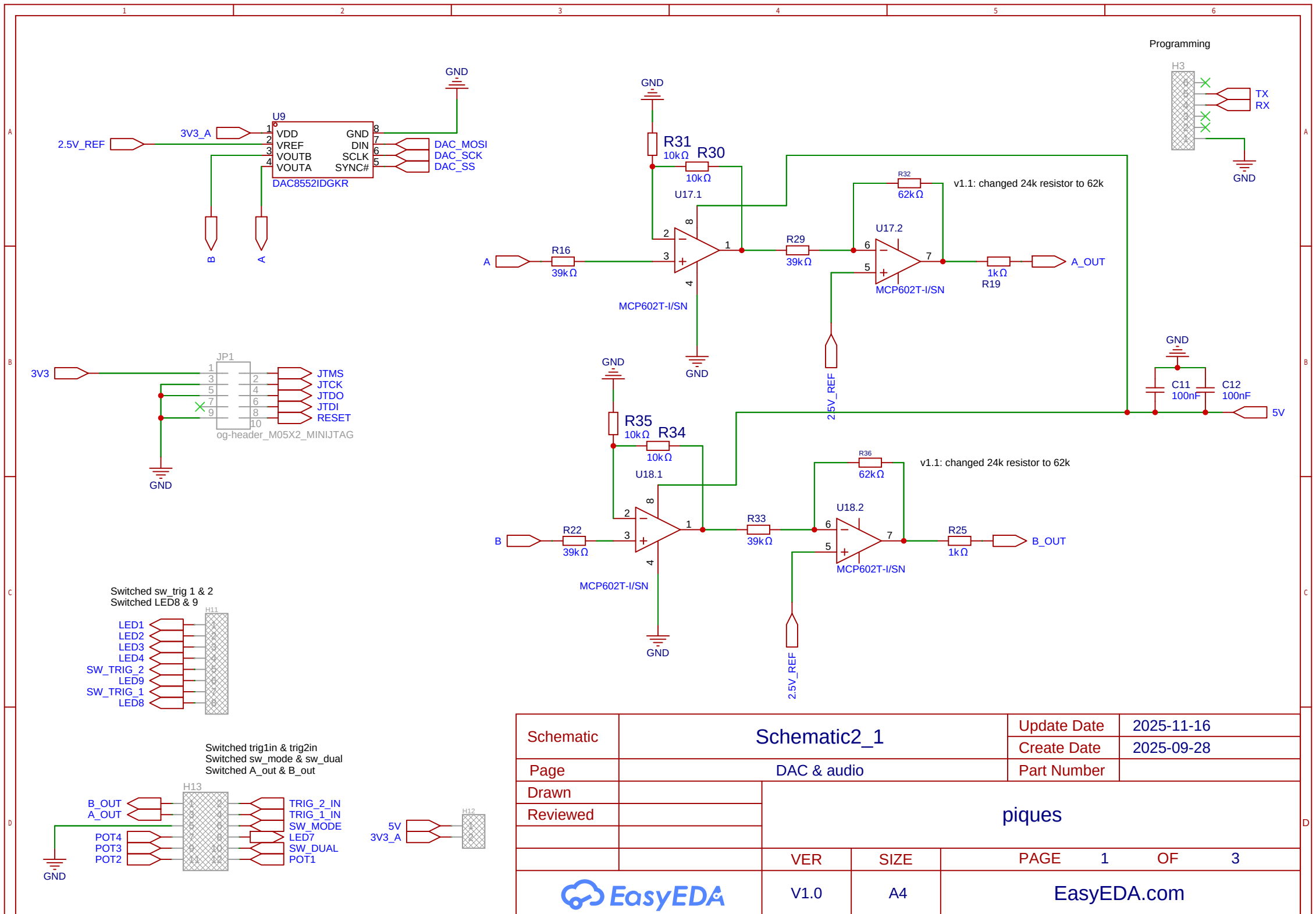

Schematic	Schematic2_1	Update Date	2025-11-16
		Create Date	2025-09-28
Page	DAC & audio	Part Number	
Drawn		piques	
Reviewed			
	VER	SIZE	PAGE 1 OF 3
EasyEDA	V1.0	A4	EasyEDA.com

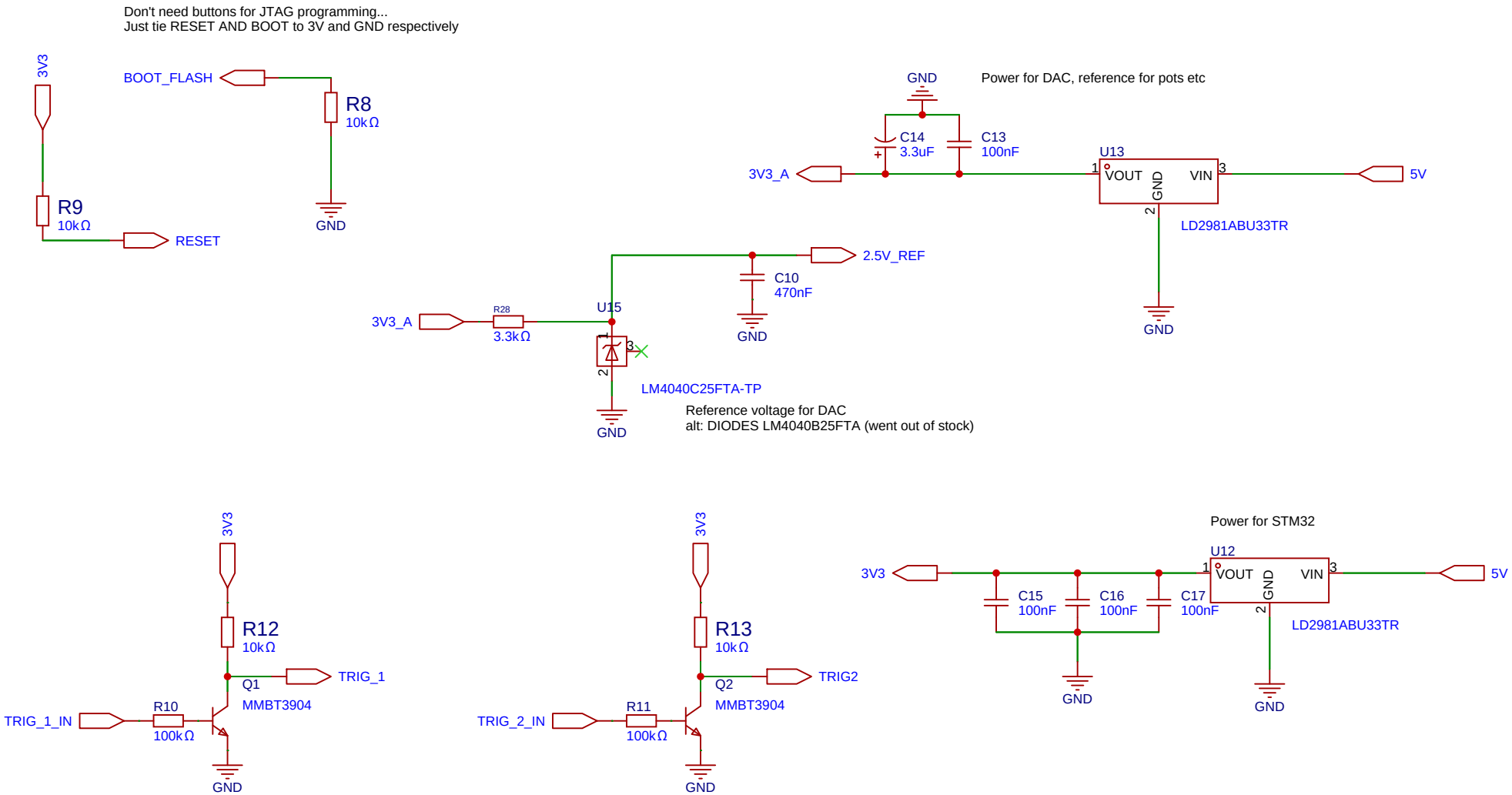

Schematic	Schematic2_1	Update Date	2026-01-23
		Create Date	2025-09-28
Page	buttons	Part Number	
Drawn		piques	
Reviewed			
		VER / SIZE / PAGE 2 OF 3	
EasyEDA	V1.0 / A4	EasyEDA.com	

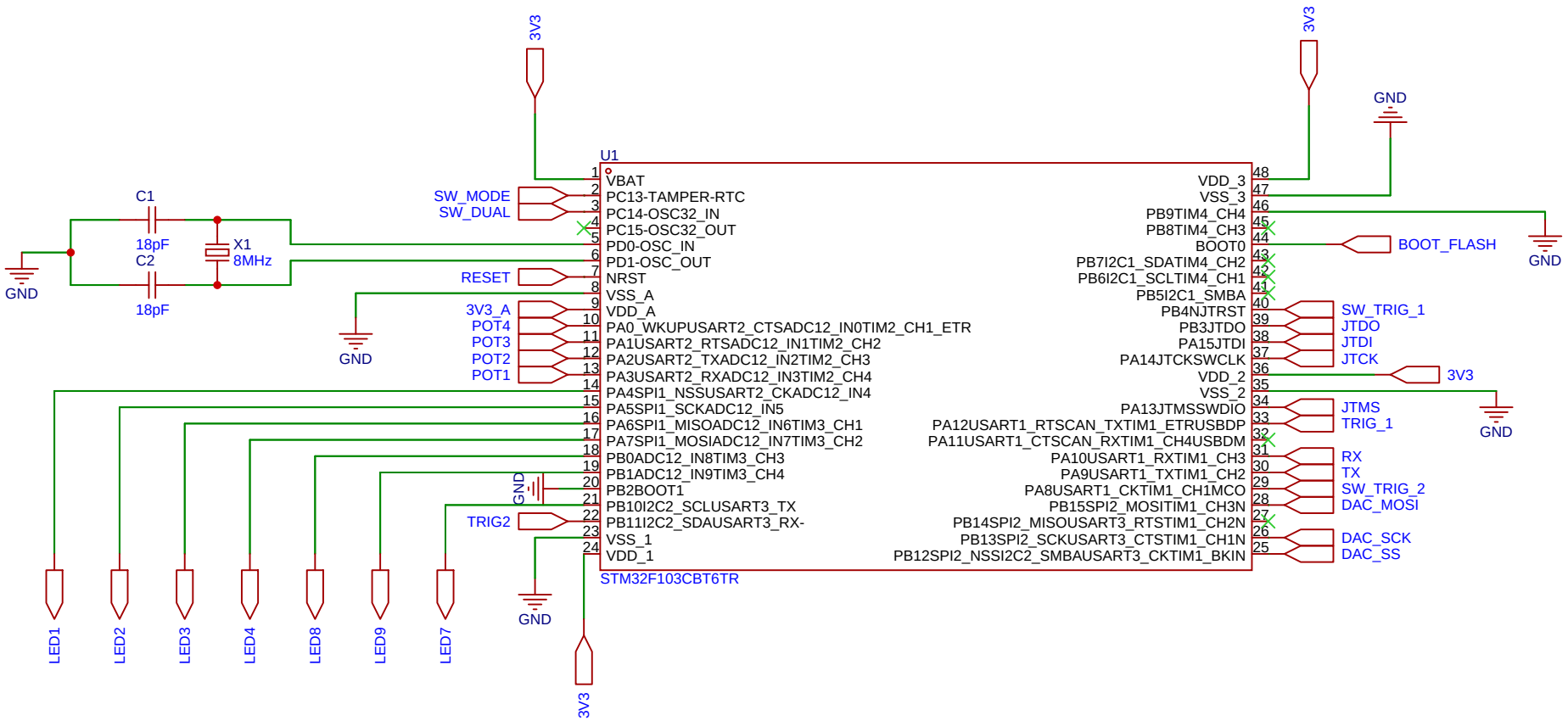

Schematic	Schematic2_1	Update Date	2026-01-23
		Create Date	2025-09-28
Page	core	Part Number	
Drawn		piques	
Reviewed			
		VER	SIZE
EasyEDA	V1.0	A4	EasyEDA.com

PAGE 3 OF 3