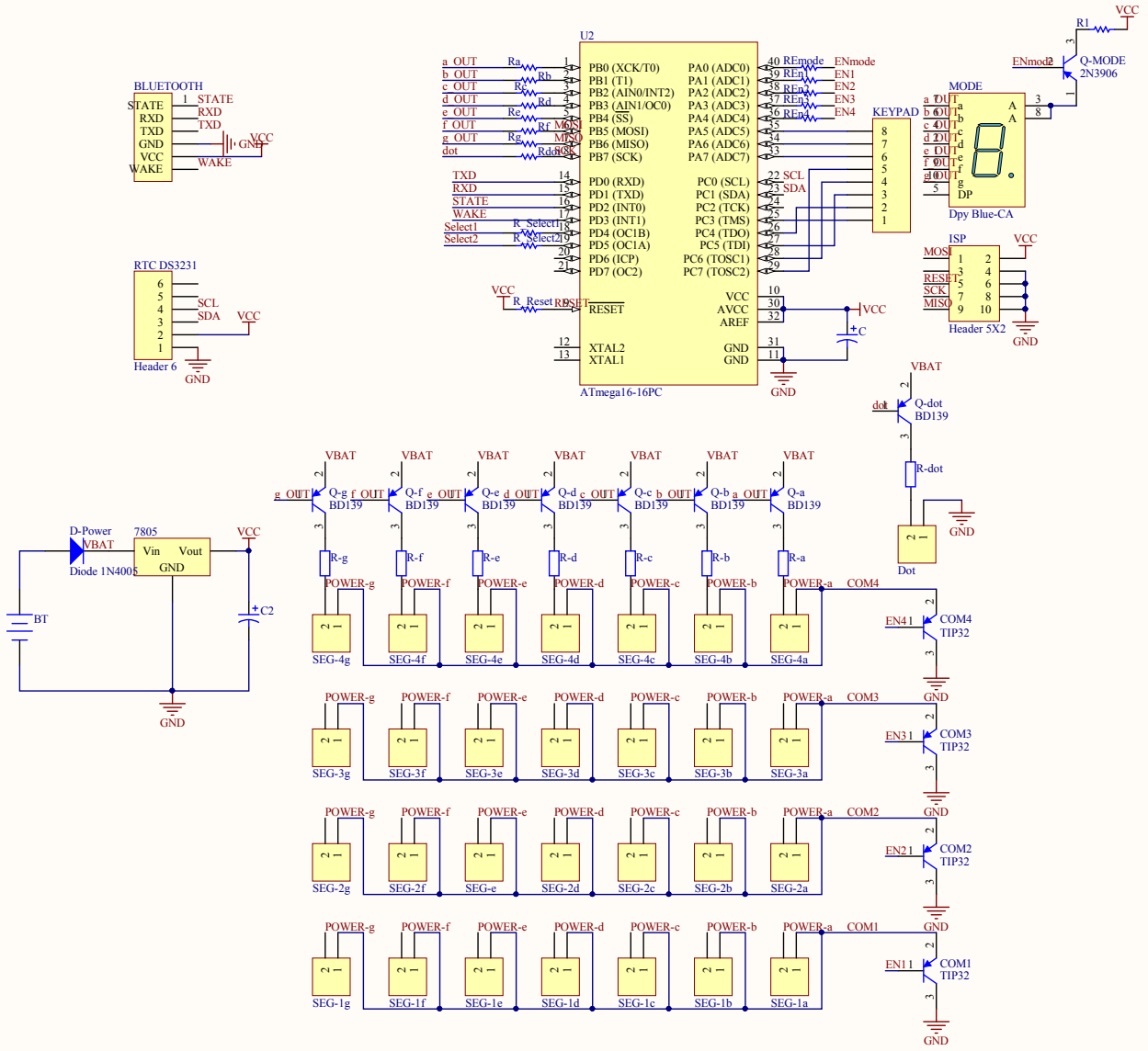

Title		
Size A	Number	Revision
Date: 3/29/2017		Sheet of
File: C:\Users\..\Subsitution board.SchDoc		Drawn By: