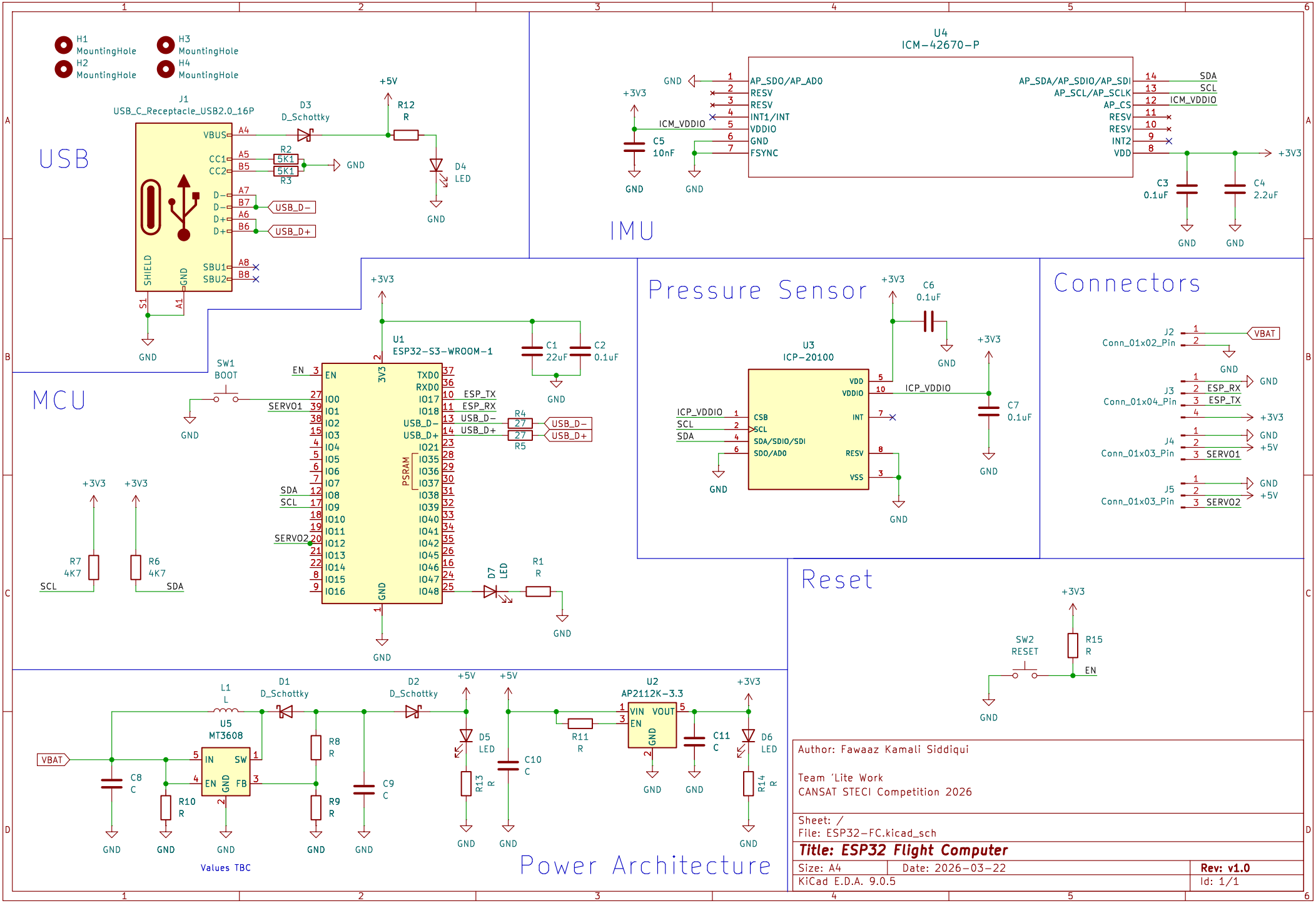
USB
MCU
IMU
Pressure Sensor
Connectors
Reset
Power Architecture
H1 MountingHole
H2 MountingHole
H3 MountingHole
H4 MountingHole
J1 USB_C_Receptacle_USB2.0_16P
D3 D_Schottky
R12 R
D4 LED
R2 5K1
R3 5K1
USB_D−
USB_D+
U4 ICM−42670−P
AP_SDO/AP_AD0
RESV
INT1/INT
VDDIO
FSYNC
AP_SDA/AP_SDIO/AP_SDI
AP_SCL/AP_SCLK
AP_CS
INT2
VDD
C5 10nF
C3 0.1uF
C4 2.2uF
U1 ESP32−S3−WROOM−1
SW1 BOOT
C1 22uF
C2 0.1uF
R4 27
R5 27
ESP_TX
ESP_RX
SERVO1
SERVO2
SDA
SCL
R7 4K7
R6 4K7
D7 LED
R1 R
U3 ICP−20100
C6 0.1uF
C7 0.1uF
CSB
SDA/SDIO/SDI
SDO/AD0
INT
RESV
VSS
J2 Conn_01x02_Pin
J3 Conn_01x04_Pin
J4 Conn_01x03_Pin
J5 Conn_01x03_Pin
VBAT
SW2 RESET
R15 R
EN
L1 L
D1 D_Schottky
D2 D_Schottky
U5 MT3608
IN
SW
FB
C8 C
R10 R
R8 R
R9 R
C9 C
D5 LED
R13 R
C10 C
R11 R
U2 AP2112K−3.3
VIN
VOUT
C11 C
D6 LED
R14 R
Values TBC
Author: Fawaaz Kamali Siddiqui
Team 'Lite Work
CANSAT STECI Competition 2026
Sheet: /
File: ESP32−FC.kicad_sch
Title: ESP32 Flight Computer
Size: A4
Date: 2026−03−22
Rev: v1.0
KiCad E.D.A. 9.0.5
Id: 1/1