Waveguide Arc Detector

A new generation of Arc Detectors developed at CERN. Each sensor head is equipped by four independent photo detectors looking directly into the waveguide covering all directions. Optional two "blind" detectors for environments with high radiation background. Reliability increased by redundancy of the sensors and implementation of the voting logic.

Sensor

- Sensor head mounted directly into the waveguide
- Air filled waveguides
- Fibre-less design
- Viewports spaced by 90 degrees
- Sensitivity: typical ~5-10 lux (direct exposure) 100's kHz bandwidth
- Shielded cable interconnection
- Typical configuration: One logic unit receives signals from two sensor units
- Each sensor unit contains four redundant light sensors
- Reaction time: 10..100 µs* (customizable)
- Programmable interlock logic (fully customizable)
- Optional two "blind" sensors for noisy or radioactive environment
- Maximum cable length between the sensor and the receiver 10..20 m

Control System

- Prepared for two independent sensors
- Mounted directly to the waveguide flange
- 3 interlock lines
- Fast reaction to strong arcs
- Delayed reaction to arcs

Reaction time:

- Interlock evaluation logic 2-3 usec
- Interlock propagation to the control system 10-20 usec
- Fully redundant logic
- Automatic sensor test

Control system interface

- Power supply $24V_{DC}$,300mA
- 3 fully configurable opto-coupled interlock outputs
- Interlock reset input
- Test input
- 2 x Sensor interface

Principle of operation

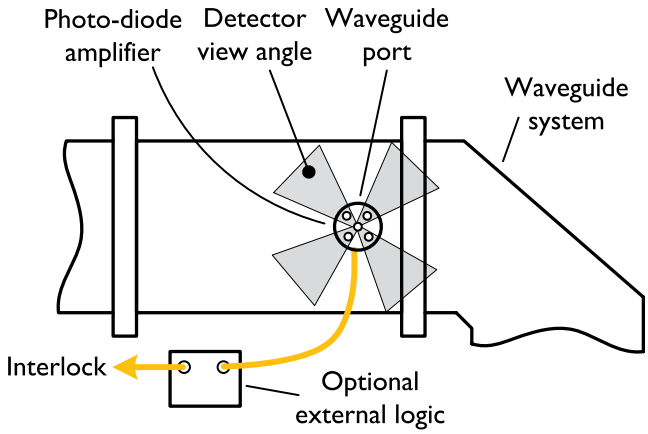

Features

- **Developed for "large" waveguides (WR2300, WR2100), full height and half-height types**
- **Mounting to the narrow wall of the waveguide**
- **Sensor head mounted directly into the waveguide**
- **Receiver prepared for two independent sensors**

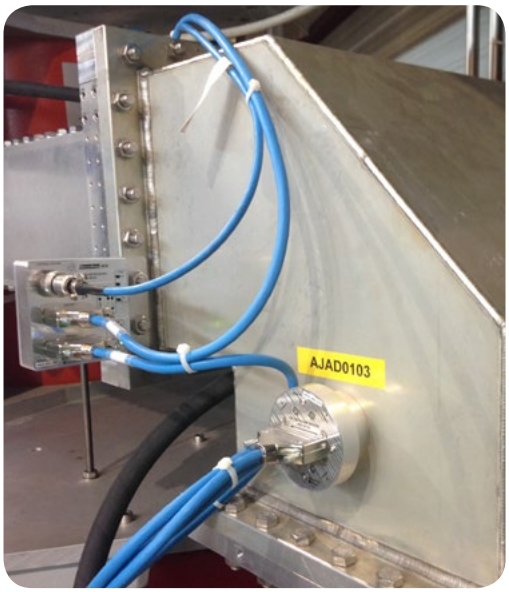

Typical installation in a full-height WR-2300 waveguide system

MicroStep-MIS, www.microstep-mis.com © 2015. All specifications subject to change without prior notice.

Arc Detector

Arc detector integration to the waveguide system

Dimensions are in mm.
Equivalent imperial size fixing screws (M4) could be used.

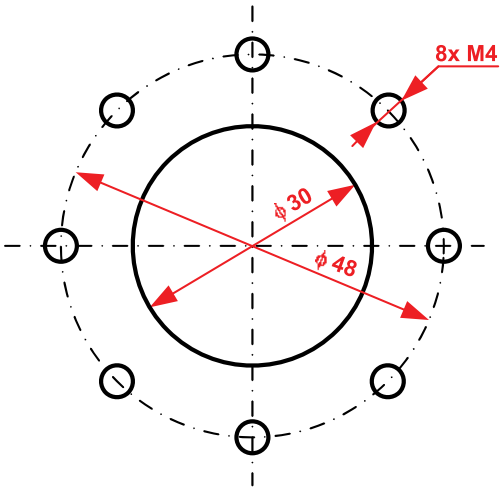

Arc detector interface and connections

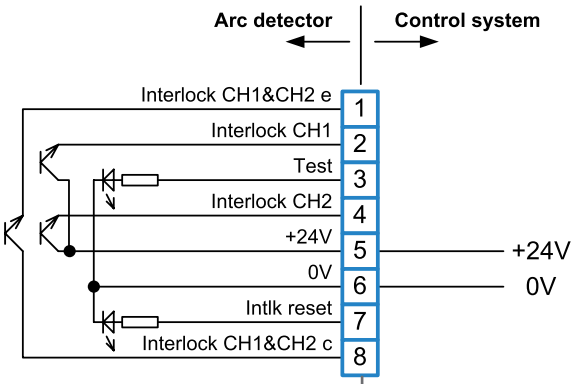

Interface to the control system:
1: Interlock CH1&CH2, emitter. Closed if OK, signal is latched, fully floating.
2: Interlock CH1, emitter. Closed if OK, signal is latched.
3: Test. Apply 24V to activate the test lamp. Level sensitive.
4: Interlock CH2, emitter. Closed if OK, signal is latched.
5: +24V/300mA power supply. Galvanically connected to CH1/CH2 coupler collector.
6: 0V power supply return. Galvanically connected to Test/Reset coupler cathode.
7: Interlock reset. Apply 24V to reset the latched interlocks. Edge sensitive.
8: Interlock CH1&CH2, collector. Closed if OK, signal is latched, fully floating.

Sensor head 1

Sensor head 2

Receiver (logic box)

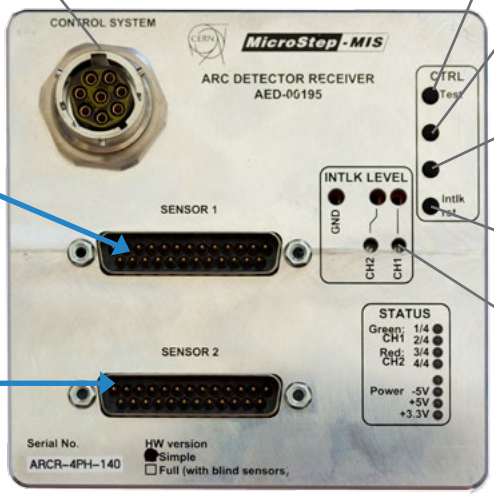

Local control

Test button flashes the internal test LED with a short pulse corresponding to running sum 2 of 4

Versatile button, currently programmed to flash the internal test LED with a short pulse corresponding to running sum 3 of 4

Versatile button, currently programmed to flash the internal test LED with a very short pulse corresponding to running sum 4 of 4

Intlk rst resets the latched interlock

Interlock level:

Adjustment of the analogue comparator level. Optimal value is in the range 1.0-1.5V, pre-adjusted from the factory, normally not needed to be changed.

MicroStep-MIS, www.microstep-mis.com © 2015. All specifications subject to change without prior notice.