PEPII

RF SYSTEM

RF SYSTEM DESCRIPTION

PS-340-330-51-R0

Submitted by _____ Date 7/21/99 RF Engineer
Heinz Schwarz

Approved by _____ Date 7/21/99 Area Manager
Alan Hill

Stanford Linear Accelerator Center
July 21, 1999

PEP-II RF SYSTEM DESCRIPTION

See **Nominal Parameter list** and **RF system layouts**.

The RF system for the **High Energy Ring (HER)** consists of 5 RF stations providing a nominal RF acceleration voltage of 14 MV. Three stations are located in support building B685 in region 8 (stations 8HR1, 8HR3, 8HR5) and two stations are located in support building B725 in region 12 (stations 12HR1, 12HR3) with the station with the lowest number being the first one in line of the beam, i.e. stations 8HR1 and 12HR1.

Each HER RF station drives four single cell **cavities**, located in the tunnel, with peripheral equipment like 3 higher order mode loads per cavity, one movable tuner, one input ceramic window and one 400 l/sec VACION vacuum pump per cavity.

Located in the support building are the **1.2 MW klystrons** which are powered by 2 MW (90 kV, 23 A) high voltage power supplies (HVPS) located outside the building.

Following each klystron is the waveguide network, first a **circulator** for protection of the klystron from reflected power and then the power splitting network with 3 **Magic-tees** followed by 4 waveguides through the penetrations into the tunnel. Each Magic-tee is terminated at its fourth port into **1.2 MW high power loads** which absorb most of the reflected power from the cavities.

Each station has a set of 6 **racks** in the support building containing station breakers, emergency off button, local control and monitor panels for the HVPS and the overall station including safety key switches and a red warning beacon indication that the klystron high voltage is ON. The Process Logic Control system providing temperature readback and most interlock functions is located in these racks as well as klystron filament and focus supplies, cavity ion gauge readouts and ion pump supplies for klystron and cavities.

A smaller air-conditioned blue rack at each station contains the **low-level RF modules**. The Low-level RF system provides control of amplitude, phase and tuning of the cavity including the fast feedback system to stabilize the interaction of the cavity with the beam to dampen multibunch oscillations and dealing with the ion clearing gap in the beam.

Close by the racks is an aluminum tank containing a **grounding switch** with lock-out provisions for the klystron high voltage power supply.

Three **water systems** provide cooling for the RF stations in each region with the pumps and controllers located on platforms outside of the support buildings. Two cooling circuits provide low-conductivity water (LCW) at regulated 35°C supply temperature one to the klystron in the support building and another to the cavities in the tunnel. A third cooling circuit provides high-conductivity water (HCL) to the high power waveguide loads and is not regulated in temperature.

The RF system for the Low Energy Ring (LER) consists of 2 RF stations providing a nominal RF acceleration voltage of 3.4 MV. The stations are located in support building B645 in region 4 (stations 4LR4, 4LR5). A third station is partially installed in position 4LR3 and is planned to be completed later. The lowest number station is first in line of the beam, i.e. stations 4LR3.

The LER RF stations drive 2 single cell cavities each and use only one Magic-tee each otherwise they are identical to the HER stations.

A **Master Oscillator** for PEP-II is located in the old PEP control room in region 8 and is itself connected to the Main Drive Line of the LINAC in sector 30 and to other PEP region RF stations via phase stabilized RF distribution lines.

Computer workstations are located in each region support building to allow local access to the EPIC computer control system of the RF stations.

RF STATION & CAVITY NOMINAL PARAMETER TABLE 1998 HEINZ SCHWARZ 5/20/98
OP. PARA. (HER 5stations,LER 2stations)

			HER	LER
FREQUENCY	fo	MHz	476	476
RF VOLTAGE/RING	V	MV	**14.00**	**3.40**
ENERGY LOSS /TURN/RING	Vl	MV	3.58	0.77
NUMBER OF CAVITIES	n		20	4
NUMBER OF CAVITIES / KLYSTRON	m		4	2
NUMBER OF IDLING STATIONS	x		0	0
BEAM CURRENT	Io	A	1.03	2.00
SHUNT IMPEDANCE / CAVITY	Zo	MΩ	3.73	3.73
SHUNT IMPEDANCE ACCEL NOTATION / CAVITY	Ra	MΩ	7.5	7.5
GAP VOLTAGE / CAVITY	Vc	kV	700.0	850.0
CAVITY WALL POWER	Pc	kW	**65.7**	**96.8**
SYNCHR. RAD. POWER / CAVITY	Ps	kW	184.4	385.0
HOM POWER / CAVITY	Ph	kW	1.9	23.3
POWER FOR IDLING CAVITIES / CAVITY	Pi	kW	0.0	0.0
BEAM POWER / CAVITY	Pb	kW	186.3	408.3
TOTAL POWER / CAVITY	Ptotc	kW	252.0	505.2
FORWARD POWER / CAVITY	Pfwd	kW	252.0	519.7
EQUIVALENT WINDOW POWER (E-field)	Pw	kW	244.3	360.3
EQUIVALENT WINDOW POWER (H-field)	Pw	kW	259.8	708.3
ENERGY LOSS / TURN / CAVITY	Va	kV	180.8	204.2
OPTIMUM COUPLING FACTOR BETA=1+Pb/Pc	β		3.84	5.22
ACTUAL BETA	β		3.72	3.72
SYNCHRONOUS PHASE ANGLE	Φ	degrees	75.0	76.10
DETUNING ANGLE	Ψ	degrees	-66.0	-74.52
CHANGE IN RESONANT FREQUENCY	f	kHz	-78.9	-126.7
UNLOADED Qo	Qo		32,000	32,000
LOADED Q	Ql		6,780	6,780
GENERATOR POWER / CAVITY	Pg	kW	252.0	519.7
GENERATOR INDUCED VOLTAGE at RESONANCE / CAV.	Vgr	kV	1,121	1,609
GENERATOR INDUCED VOLTAGE / CAVITY	Vg	kV	456	430
BEAM INDUCED VOLTAGE at RESONANCE / CAVITY	Vbr	kV	1628	3161
BEAM INDUCED VOLTAGE / CAVITY	Vb	kV	662	844
BEAM INDUCED POWER at RESONANCE (CAVITY)	Pc'	kW	355	1339
BEAM INDUCED POWER at RESONANCE (EMITTED)	Pe	kW	1322	4983
TOTAL BEAM INDUCED POWER at RESONANCE / CAV.	P	kW	1677	6322
GENERATOR CURRENT / CAVITY	Ig	A	1.42	2.04
BEAM CURRENT at fo	Ib	A	2.06	4.00
BETA with BEAM	β		1.0	0.7
REFLECTED POWER / CAVITY	Pr	kW	0.1	14.6
REFLECTED POWER / KLYSTRON	Prtot	kW	0.2	29.1
POWER LOSS IN WAVEGUIDE	Pwg	kW	10.3	21.3
GENERATOR POWER / CAVITY	Pgtot	kW	262	541
KLYSTRON POWER	Pkly	kW	**1,049**	**1,082**
SYNCHROTRON FREQUENCY	fs	kHz	6.10	3.67
BUNCH LENGTH	l	cm	**1.15**	**1.24**

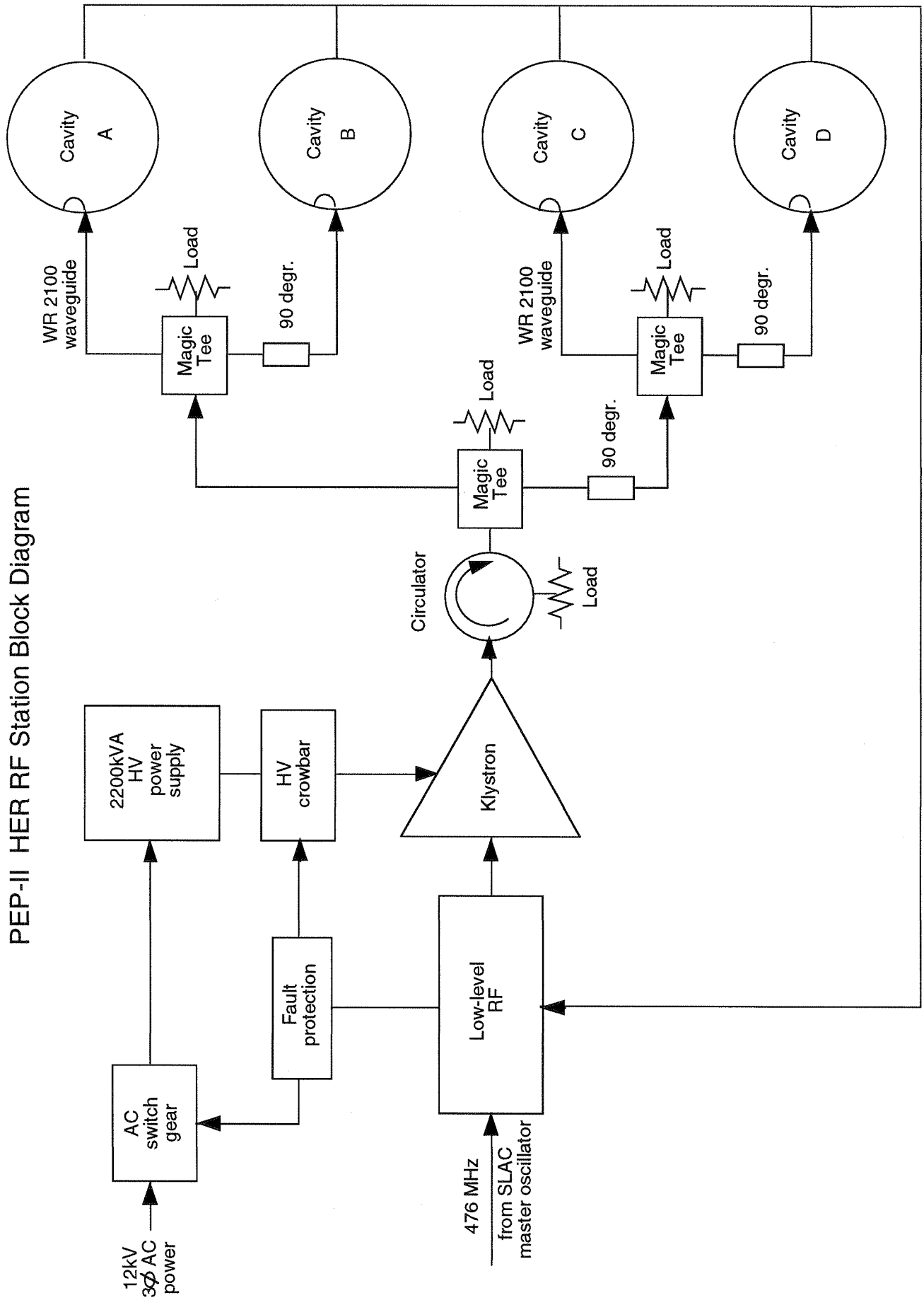
PEP-II HER RF Station Block Diagram
Cavity A
Cavity B
Cavity C
Cavity D
WR 2100 waveguide
Load
Magic Tee
90 degr.
Circulator
Klystron
2200kVA HV power supply
HV crowbar
Fault protection
Low-level RF
AC switch gear
12kV 3ϕ AC power
476 MHz
from SLAC master oscillator

PEP-II LER RF Station Block Diagram

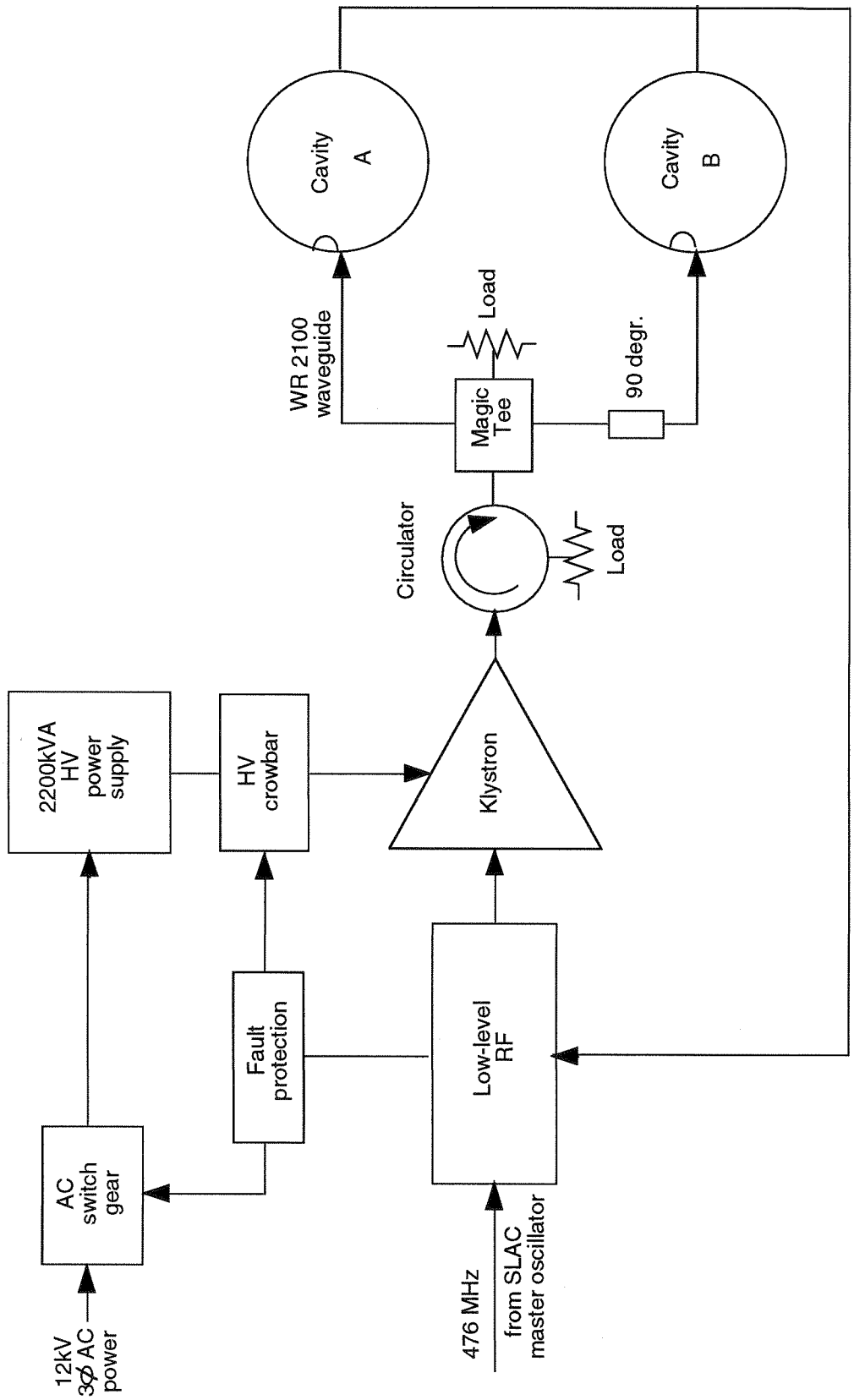

Typical Cross-Sectional Layout of RF Station

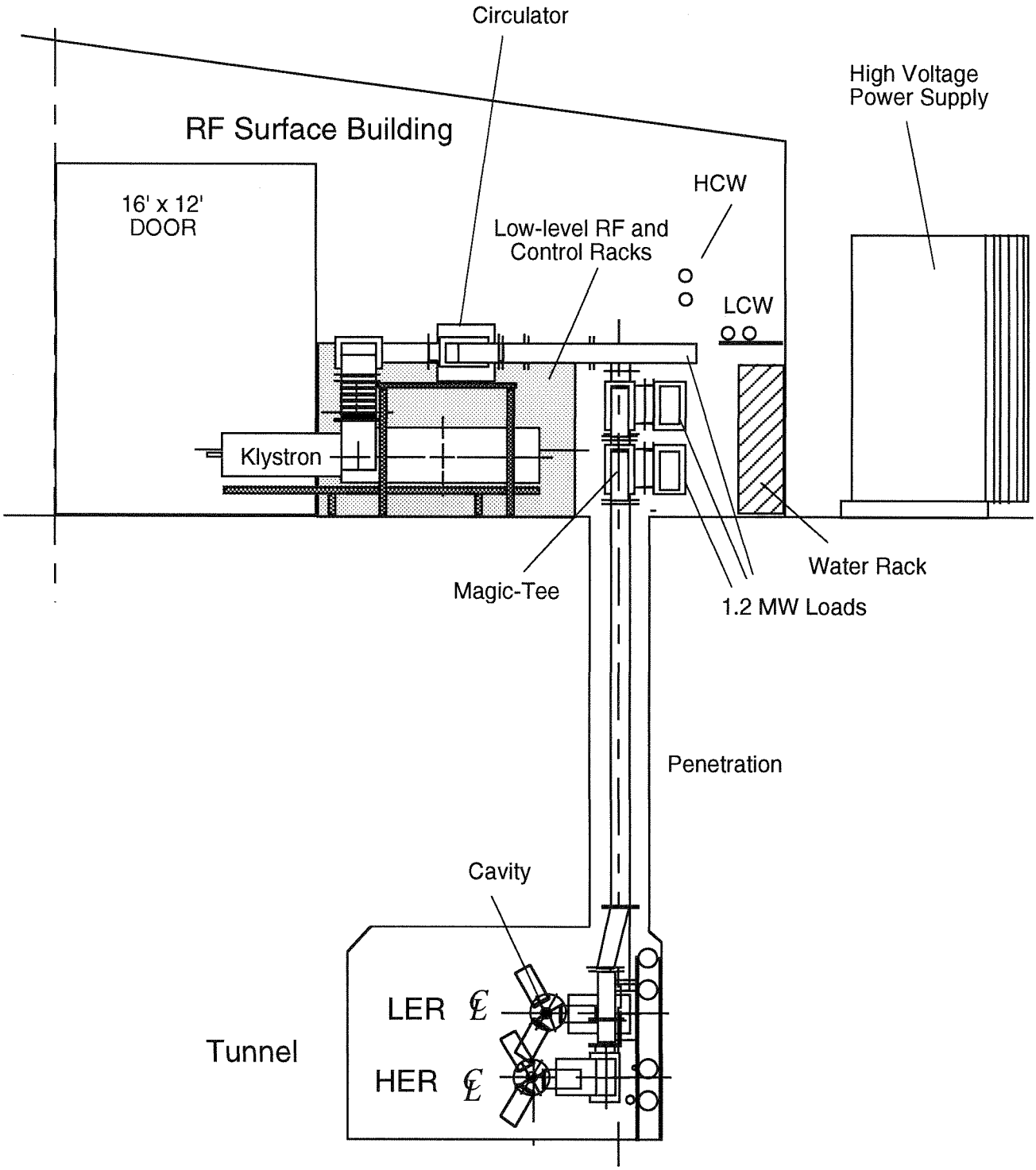

Plan view of Region 12 RF Support Building B725

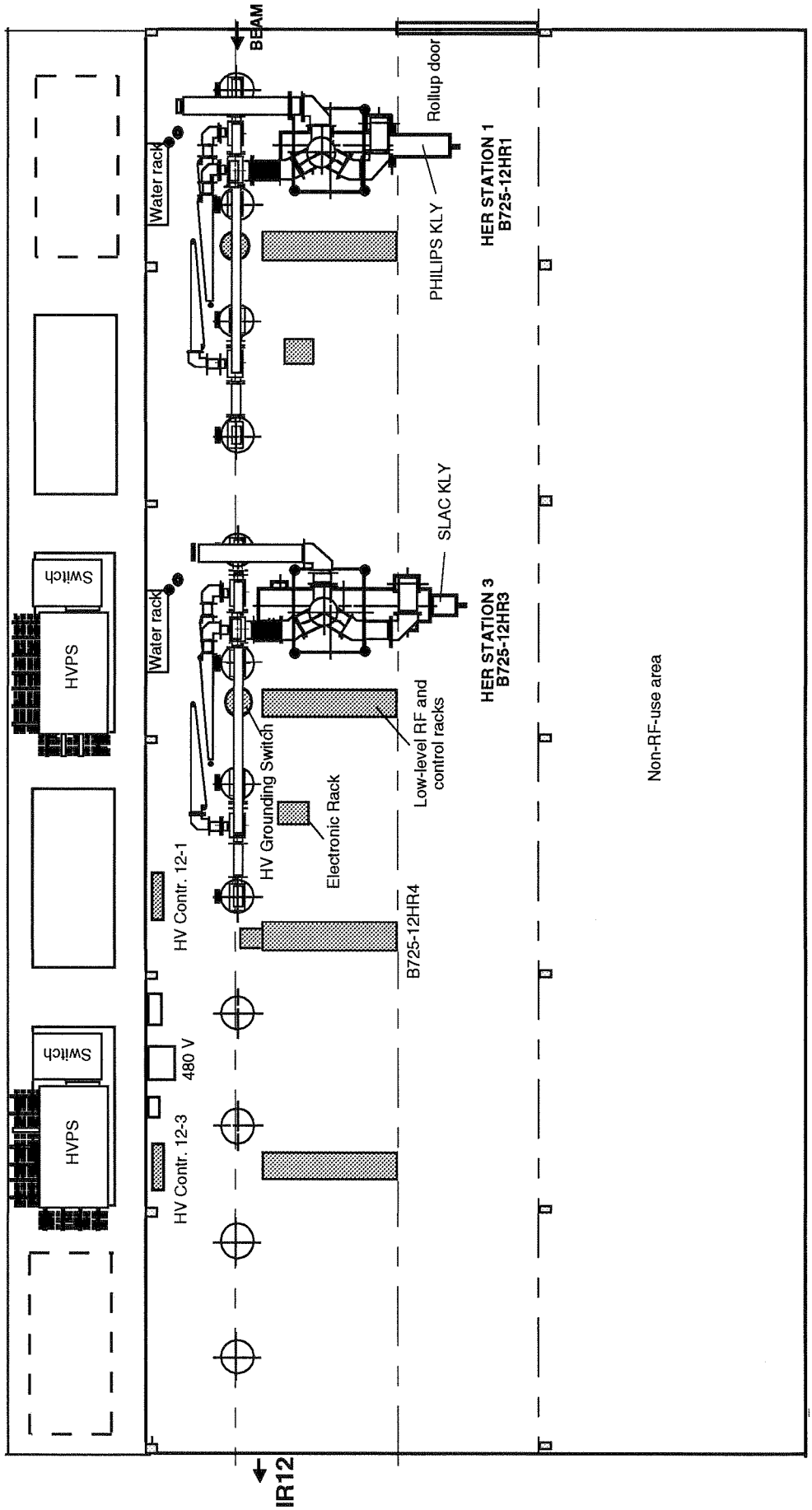

Plan view of Region 8 RF Support Building B685

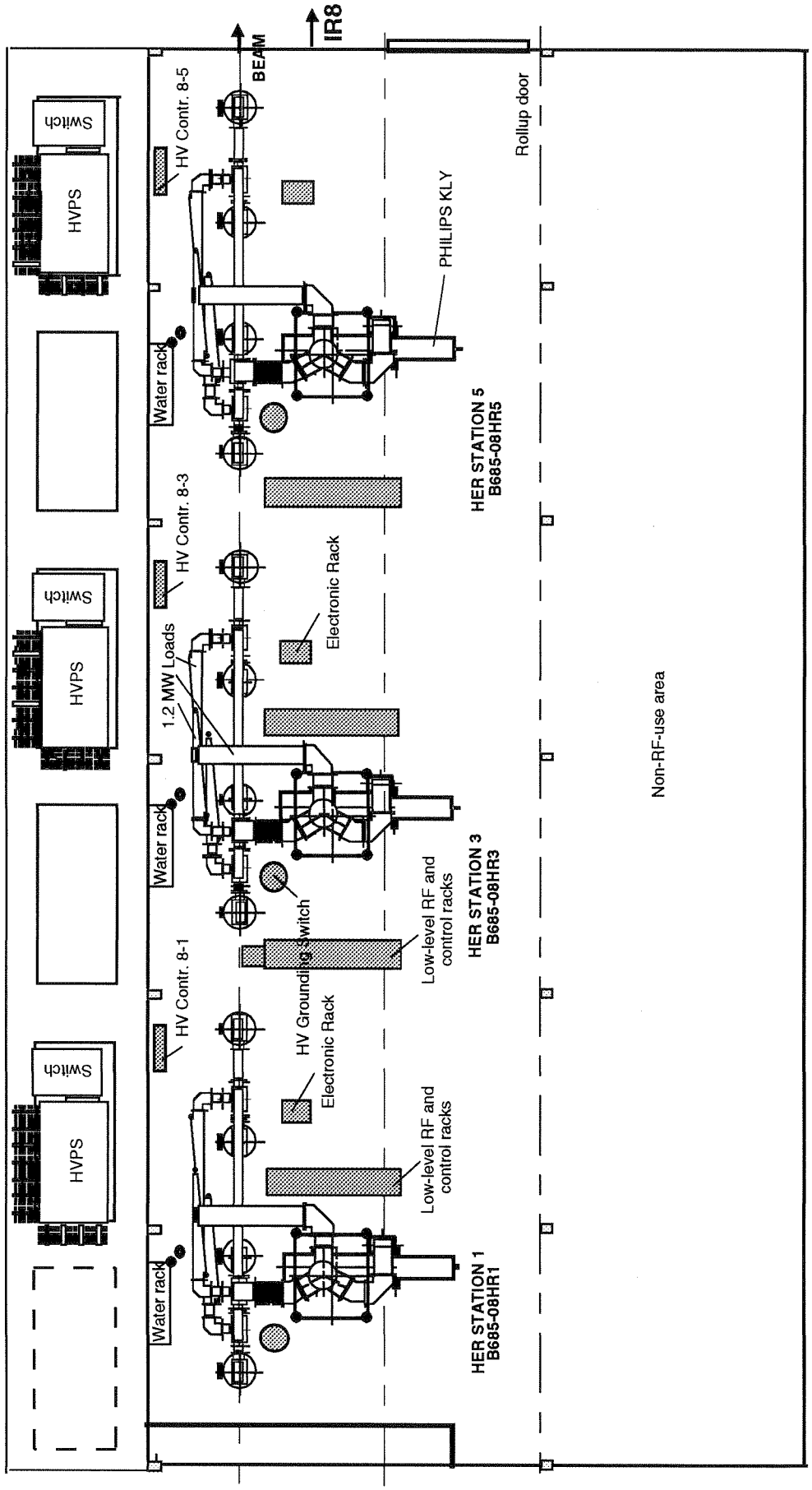

Plan View of Region 4 RF Support Building B645

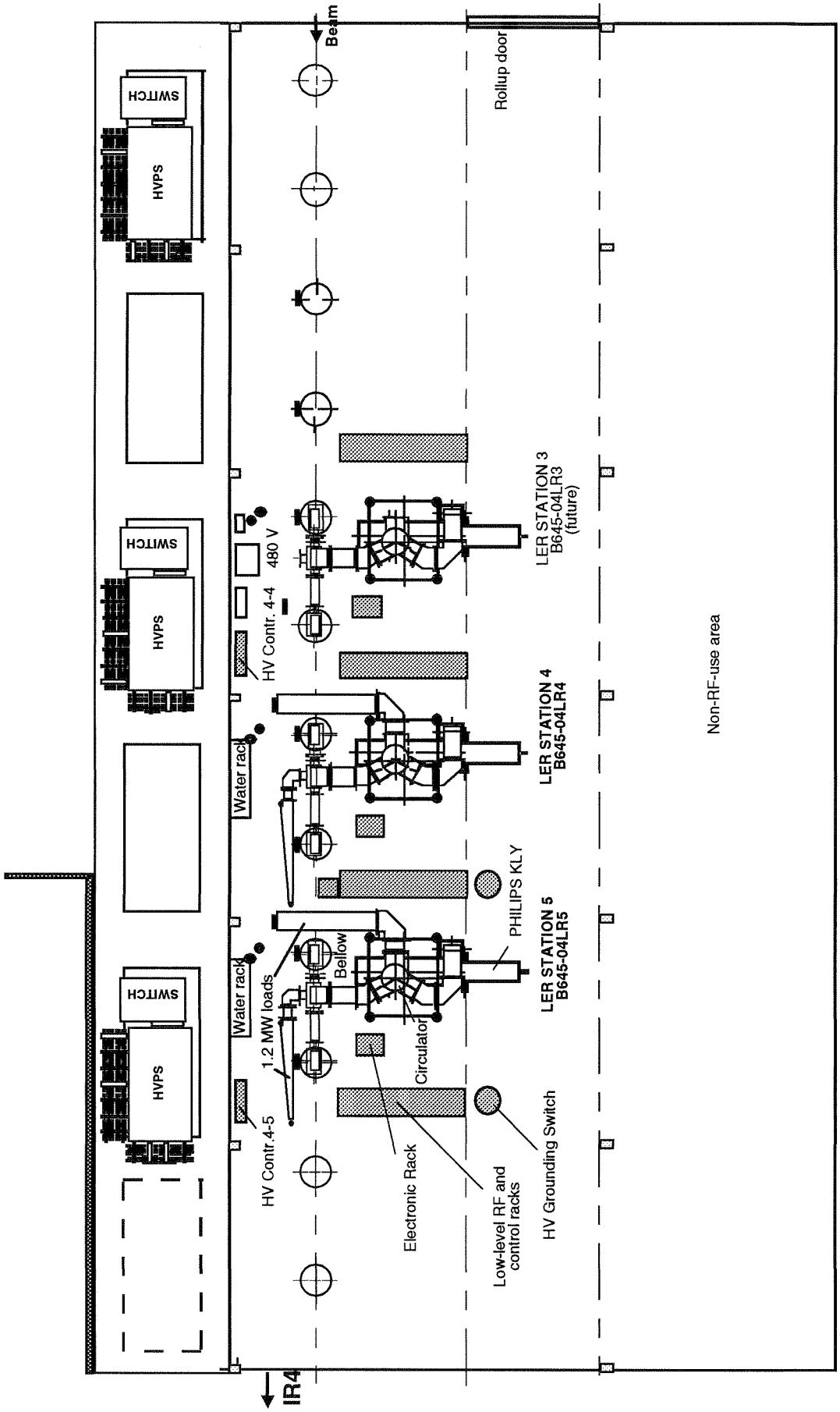

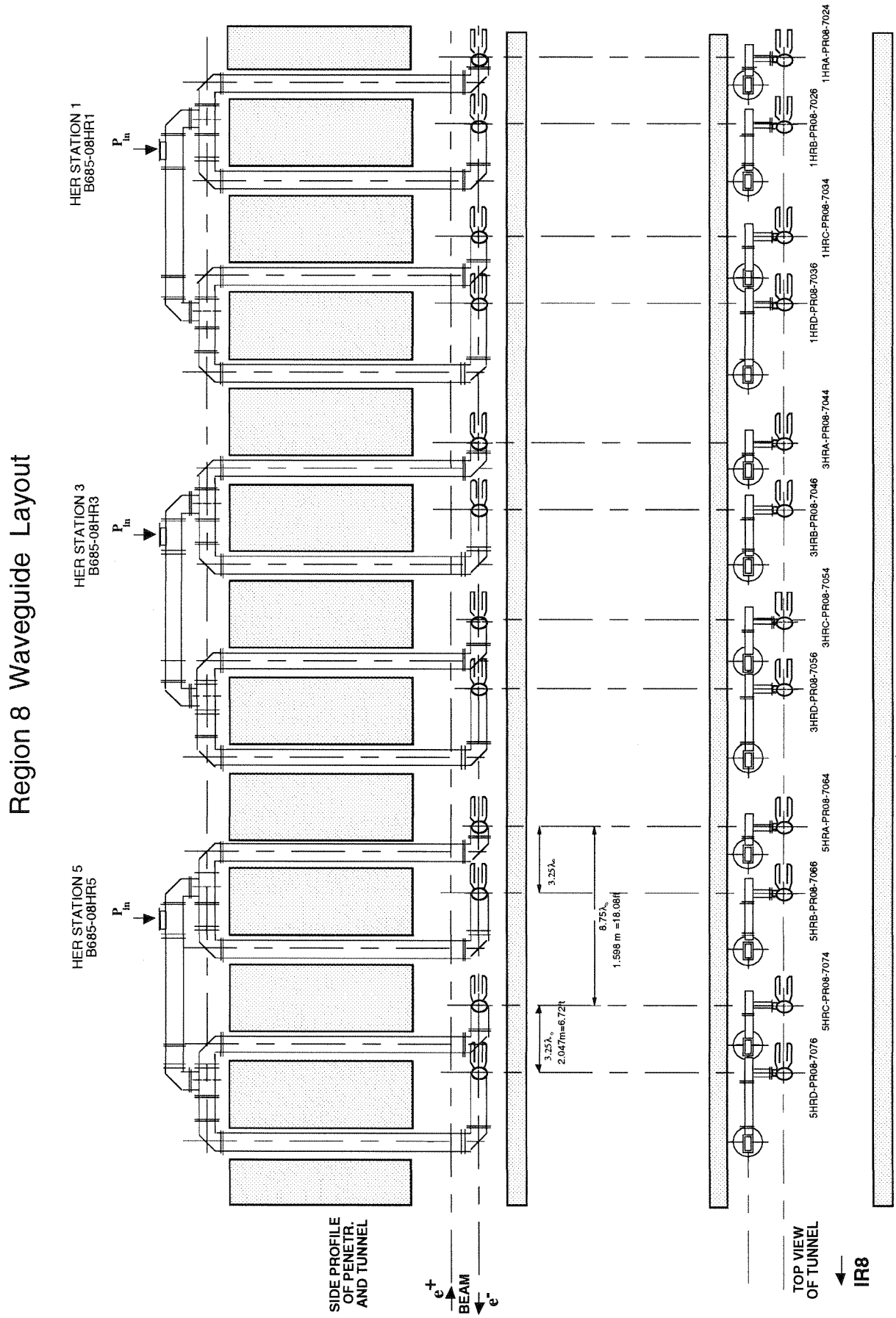
Region 8 Waveguide Layout
HER STATION 1
B685-08HR1
HER STATION 3
B685-08HR3
HER STATION 5
B685-08HR5
P_{in}
$3.25\lambda_o$
$8.75\lambda_o$
1.598 m =18.08ft
$3.25\lambda_o$
2.047m=6.72ft
1HRA-PR08-7024
1HRB-PR08-7026
1HRC-PR08-7034
1HRD-PR08-7036
3HRA-PR08-7044
3HRB-PR08-7046
3HRC-PR08-7054
3HRD-PR08-7056
5HRA-PR08-7064
5HRB-PR08-7066
5HRC-PR08-7074
5HRD-PR08-7076
SIDE PROFILE OF PENETR. AND TUNNEL
e^+
BEAM
e^-
TOP VIEW OF TUNNEL
IR8