REV	DESCRIPTION	DFTR	CHKR	ENGR APPV	DATE

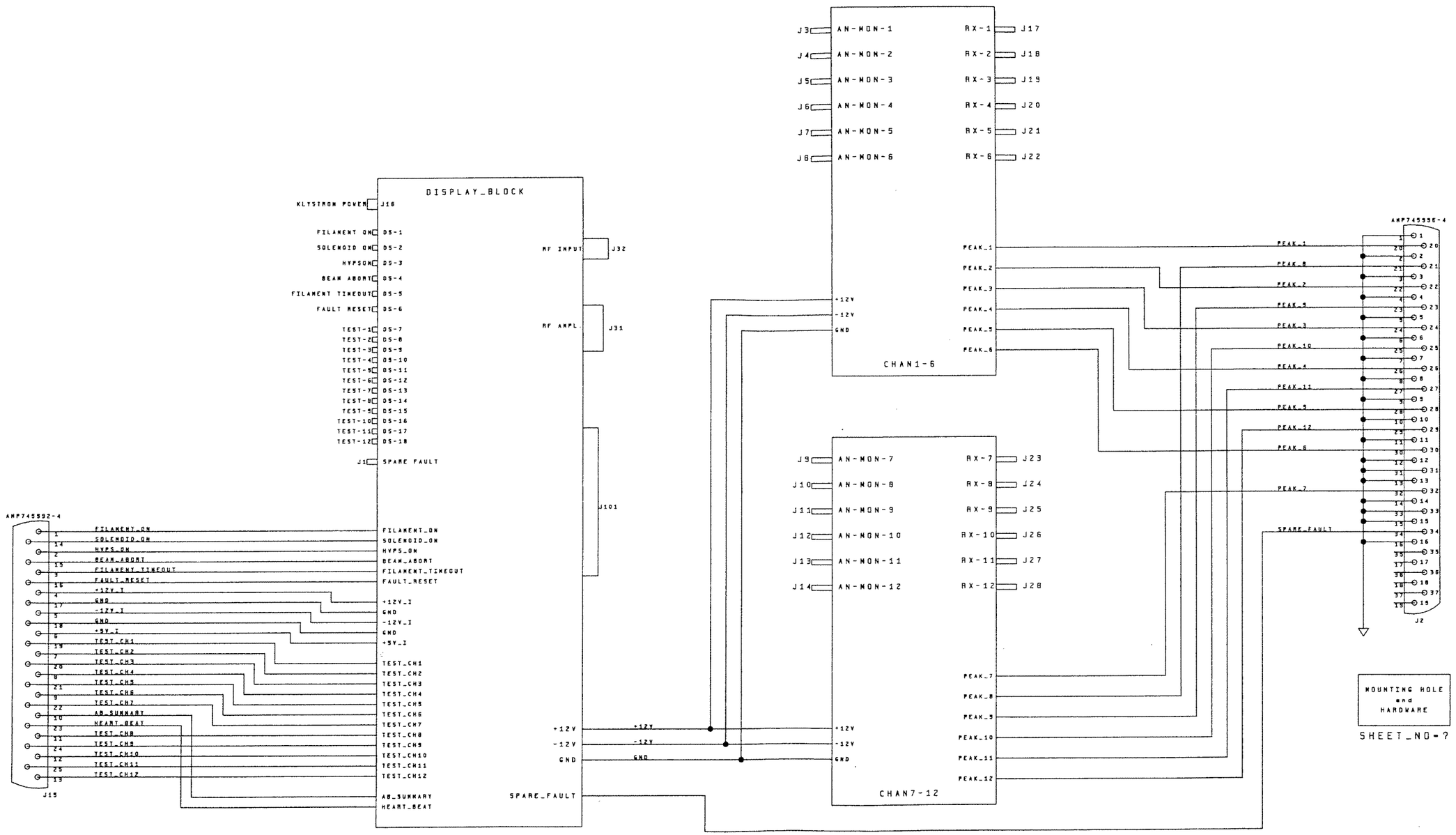

FI_RC_BOARD.1
7-25-2002_12:06

FAST INTERLOCK TRANSMITTER

STANFORD LINEAR ACCELERATOR CENTER
U.S. DEPARTMENT OF ENERGY
STANFORD UNIVERSITY STANFORD, CALIFORNIA

PROPRIETARY DATA OF STANFORD UNIVERSITY AND/OR U.S. DEPARTMENT OF ENERGY. RECIPIENT SHALL NOT PUBLISH THE INFORMATION WITHIN UNLESS GRANTED SPECIFIC PERMISSION OF STANFORD UNIVERSITY.

		DATE	APPROVALS
ENGR	B. Rooter	3/14/2002	
DFTR	C. Yee	3/14/2002	
CHKR			

SHEET 1 OF 4

PEP-II RF SYSTEM
FAST INTERLOCK CHASSIS
RECEIVER BOARD

SD-340-308-02-R1 D

REV	DESCRIPTION	DFTR	CHKR	ENGR APPV	DATE

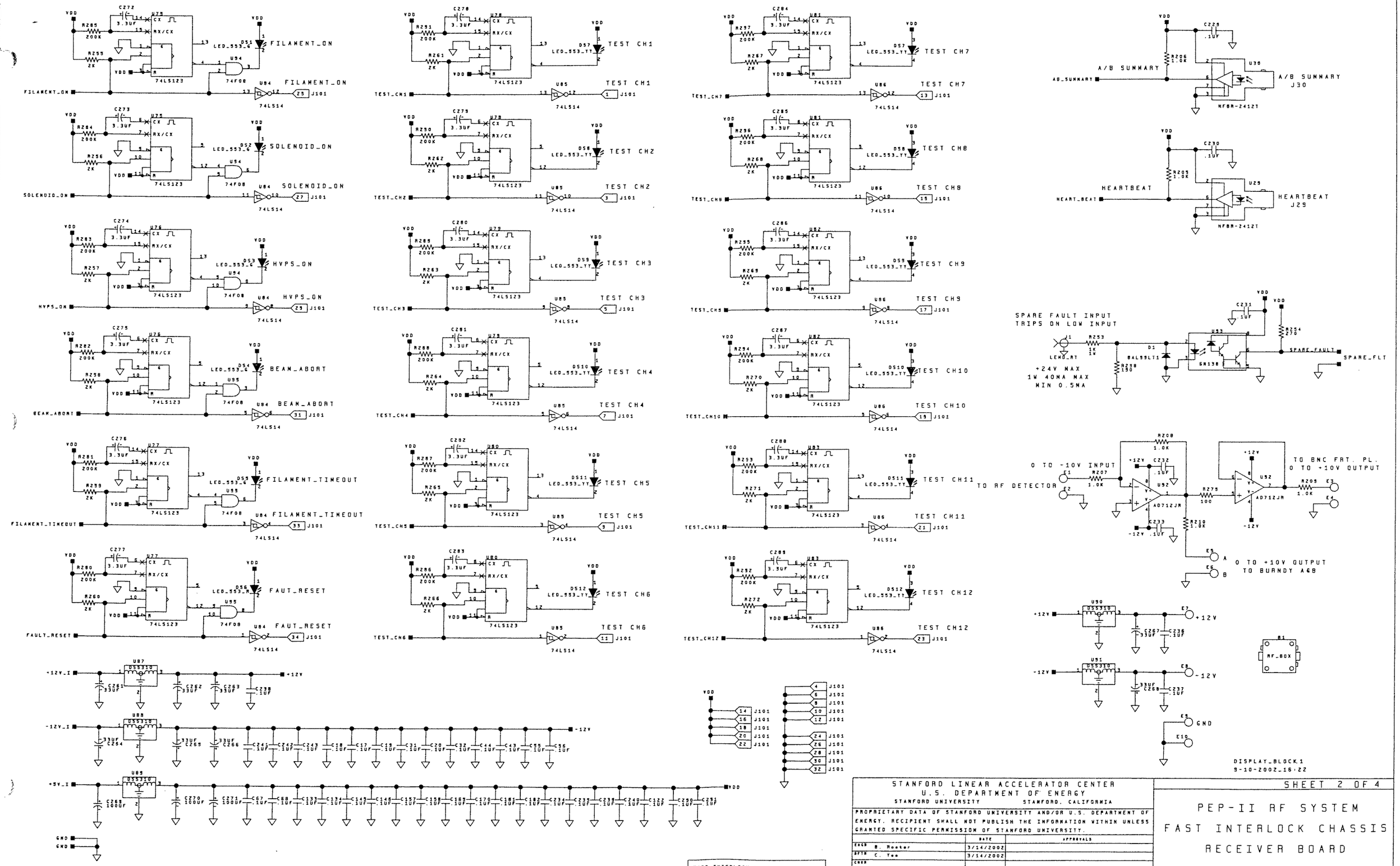

STANFORD LINEAR ACCELERATOR CENTER
U.S. DEPARTMENT OF ENERGY
STANFORD UNIVERSITY STANFORD, CALIFORNIA

PROPRIETARY DATA OF STANFORD UNIVERSITY AND/OR U.S. DEPARTMENT OF ENERGY. RECIPIENT SHALL NOT PUBLISH THE INFORMATION WITHIN UNLESS GRANTED SPECIFIC PERMISSION OF STANFORD UNIVERSITY.

		DATE	APPROVALS
ENGR	B. Hooker	3/14/2002	
DFTR	C. Tam	3/14/2002	
CHKR			

SHEET 2 OF 4

PEP-II RF SYSTEM FAST INTERLOCK CHASSIS RECEIVER BOARD

SD-340-308-02-R1 D

REV	DESCRIPTION	DFTR	CHKR	ENGR APPV	DATE

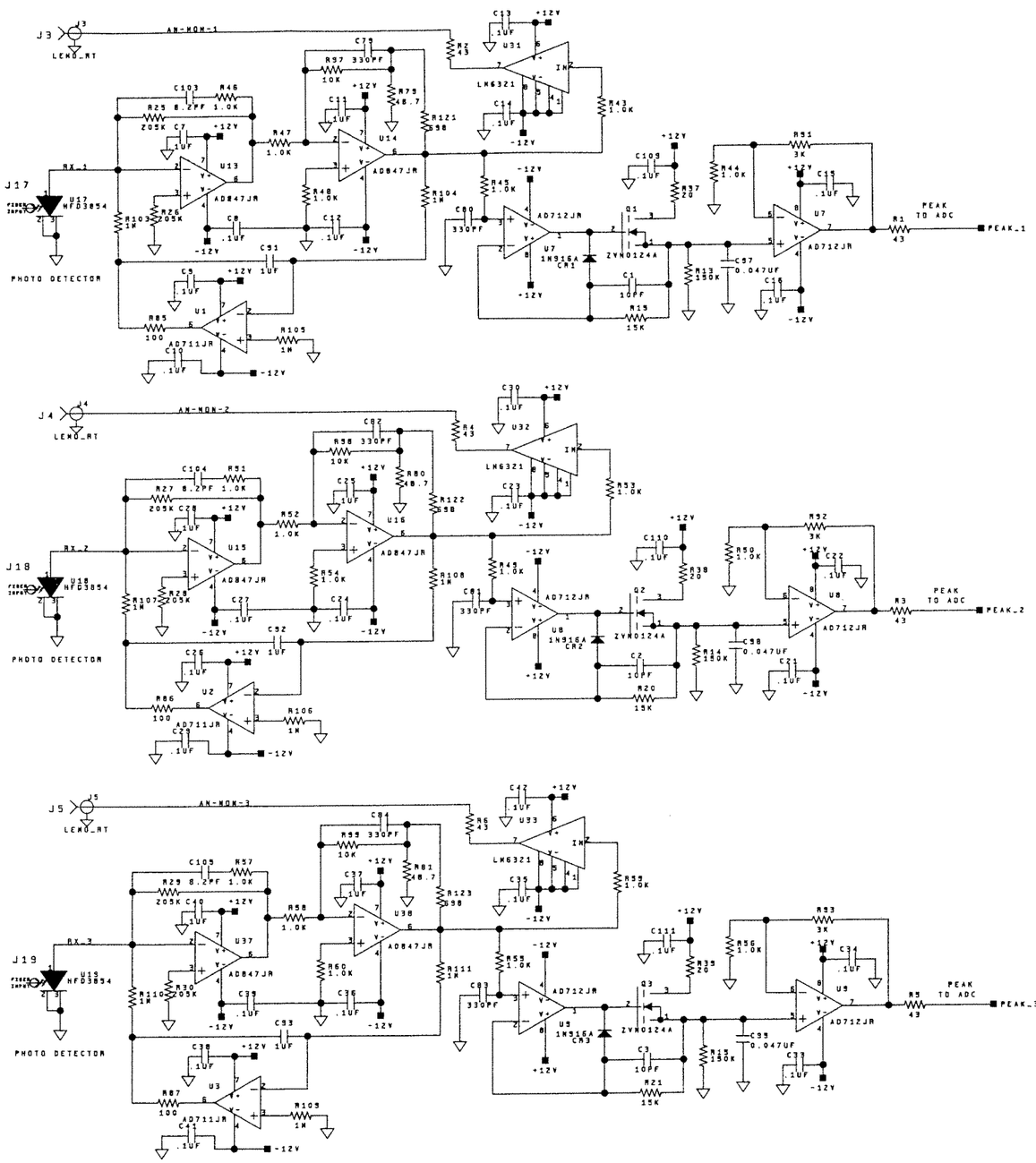

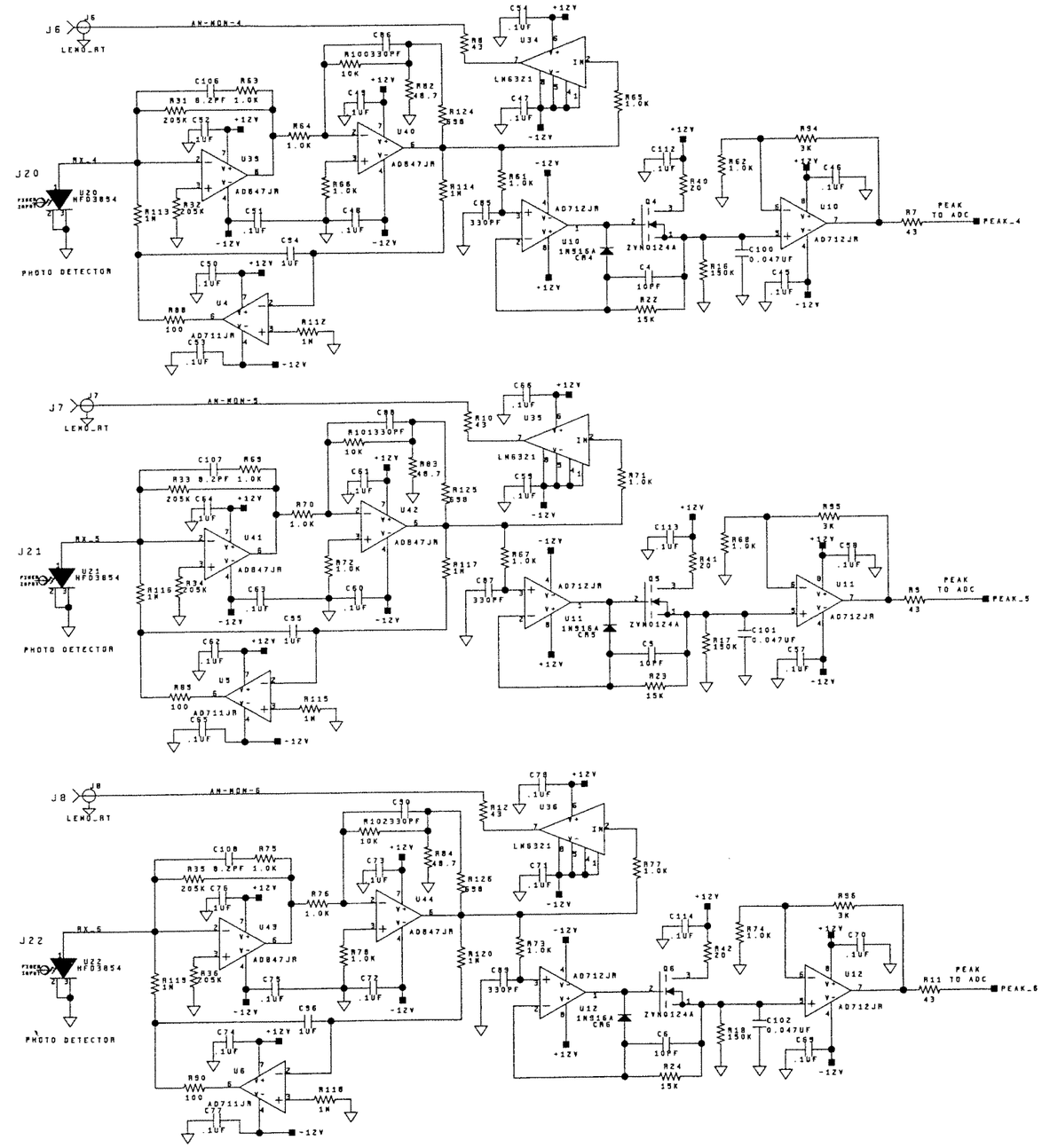

CHAN1-6.1
7-25-2002_12:15

FAST INTERLOCK TRANSMITTER

STANFORD LINEAR ACCELERATOR CENTER
U.S. DEPARTMENT OF ENERGY
STANFORD UNIVERSITY STANFORD, CALIFORNIA

PROPRIETARY DATA OF STANFORD UNIVERSITY AND/OR U.S. DEPARTMENT OF ENERGY. RECIPIENT SHALL NOT PUBLISH THE INFORMATION WITHIN UNLESS GRANTED SPECIFIC PERMISSION OF STANFORD UNIVERSITY.

	DATE	APPROVALS
ENGR B. Reeter	3/14/2002	
DFTR C. Yee	3/14/2002	
CHKR		

SHEET 3 OF 4

PEP-II RF SYSTEM
FAST INTERLOCK CHASSIS
RECEIVER BOARD

SD-340-308-02-R1 D

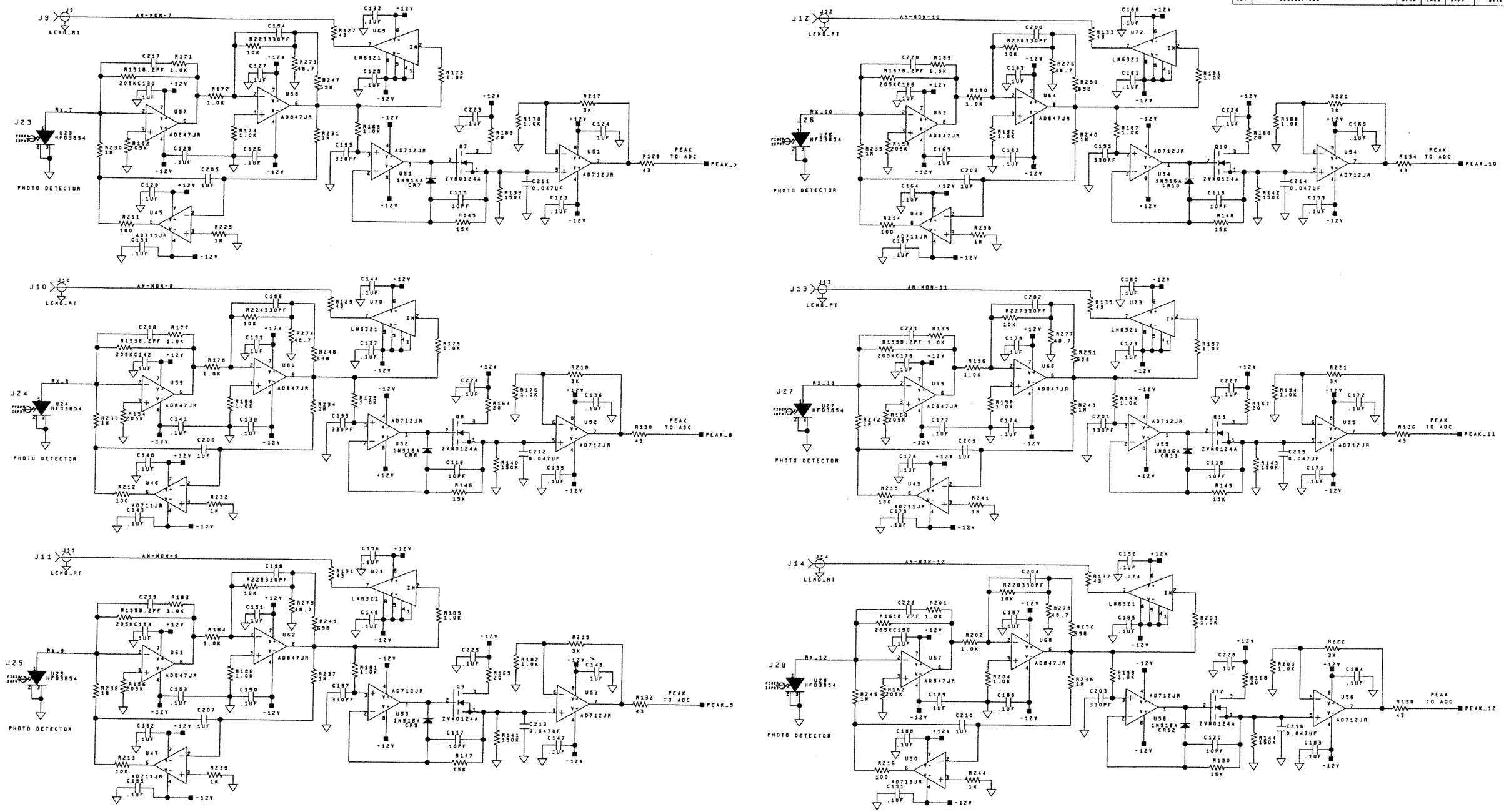

CHAN7-12.1
7-25-2002_12:16

FAST INTERLOCK TRANSMITTER

REV	DESCRIPTION	DFTR	CHKR	ENGR APPV	DATE

STANFORD LINEAR ACCELERATOR CENTER
U.S. DEPARTMENT OF ENERGY
STANFORD UNIVERSITY STANFORD, CALIFORNIA

PROPRIETARY DATA OF STANFORD UNIVERSITY AND/OR U.S. DEPARTMENT OF ENERGY. RECIPIENT SHALL NOT PUBLISH THE INFORMATION WITHIN UNLESS GRANTED SPECIFIC PERMISSION OF STANFORD UNIVERSITY.

		DATE	APPROVALS
ENGR	B. Reeder	3/14/2002	
DFTR	C. Yee	3/14/2002	
CHKR			

SHEET 4 OF 4

PEP-II RF SYSTEM
FAST INTERLOCK CHASSIS
RECEIVER BOARD

SD-340-308-02-R1 D