REV	DESCRIPTION	DFTR	CHKR	ENGR APPV	DATE

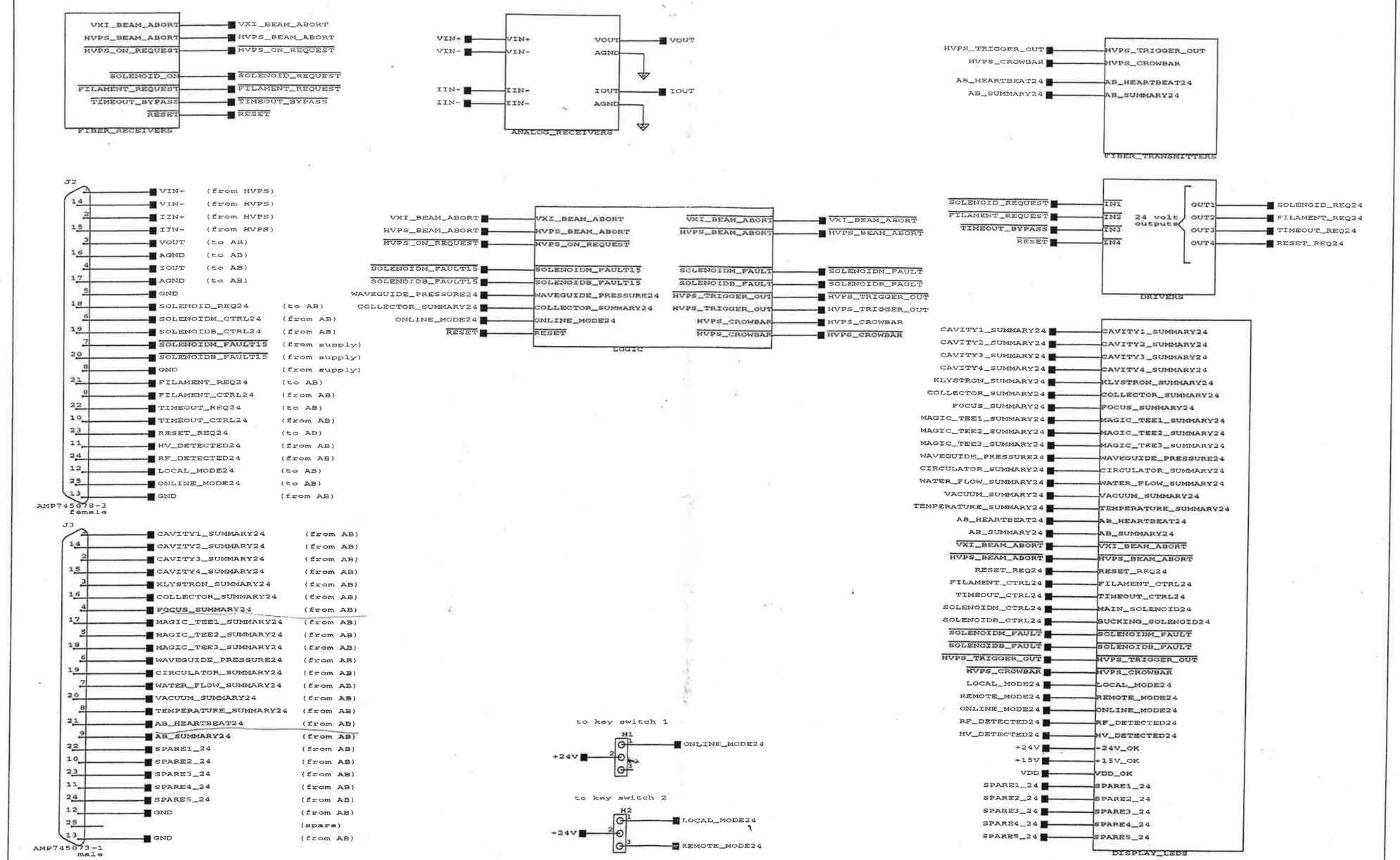

STANFORD LINEAR ACCELERATOR CENTER
U.S. DEPARTMENT OF ENERGY
STANFORD UNIVERSITY STANFORD, CALIFORNIA

PROPRIETARY DATA OF STANFORD UNIVERSITY AND/OR U.S. DEPARTMENT OF ENERGY. RECIPIENT SHALL NOT PUBLISH THE INFORMATION WITHIN UNLESS GRANTED SPECIFIC PERMISSION OF STANFORD UNIVERSITY.

	DATE	APPROVALS
ENGR		
DFTR		
CHKR		

SHEET OF

PEP-II RF SYSTEM LOCAL PANEL

SD-340-311-01-R0 C

$1I36

REV	DESCRIPTION	DFTR	CHKR	ENGR APPV	DATE

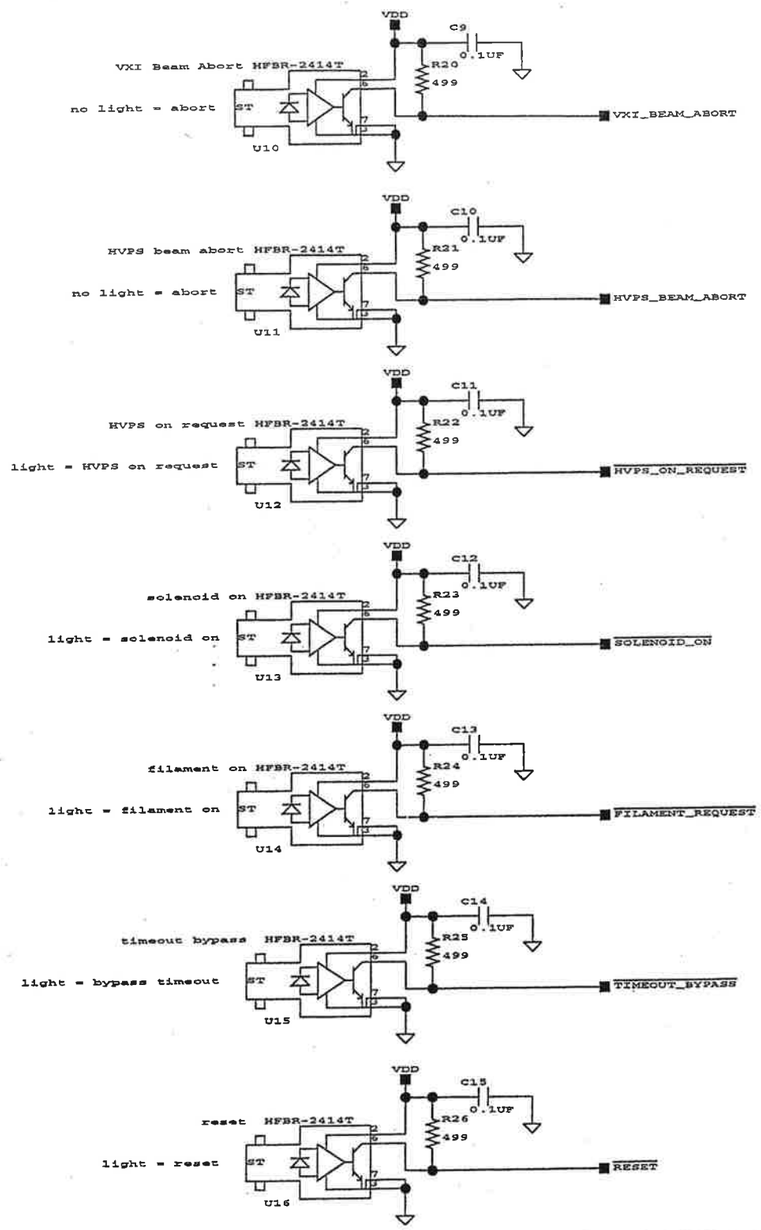

FIBER_RECEIVERS

SD-340-311-01-R0

STANFORD LINEAR ACCELERATOR CENTER
U.S. DEPARTMENT OF ENERGY
STANFORD UNIVERSITY STANFORD, CALIFORNIA

PROPRIETARY DATA OF STANFORD UNIVERSITY AND/OR U.S. DEPARTMENT OF ENERGY. RECIPIENT SHALL NOT PUBLISH THE INFORMATION WITHIN UNLESS GRANTED SPECIFIC PERMISSION OF STANFORD UNIVERSITY.

	DATE	APPROVALS
ENGR		
DFTR		
CHKR		

SHEET OF

PEP-II RF SYSTEM
LOCAL PANEL

SD-340-311-01-R0 | C

S1|6\S1

REV	DESCRIPTION	DFTR	CHKR	ENGR APPV	DATE

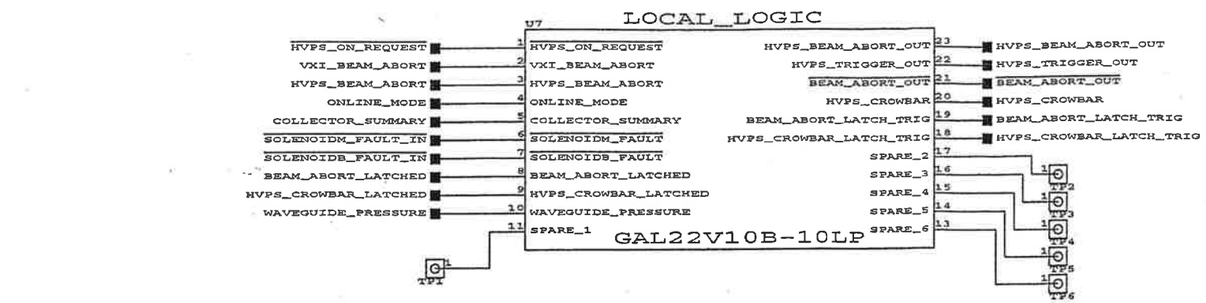

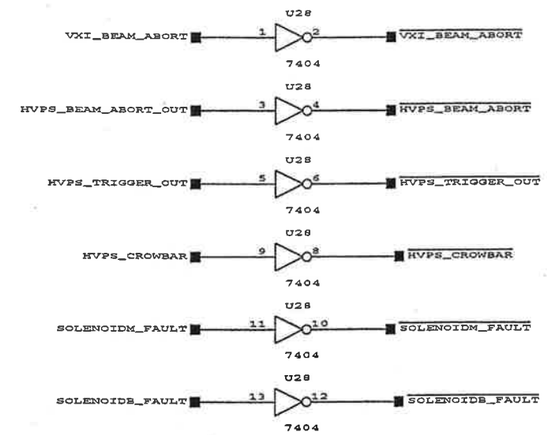

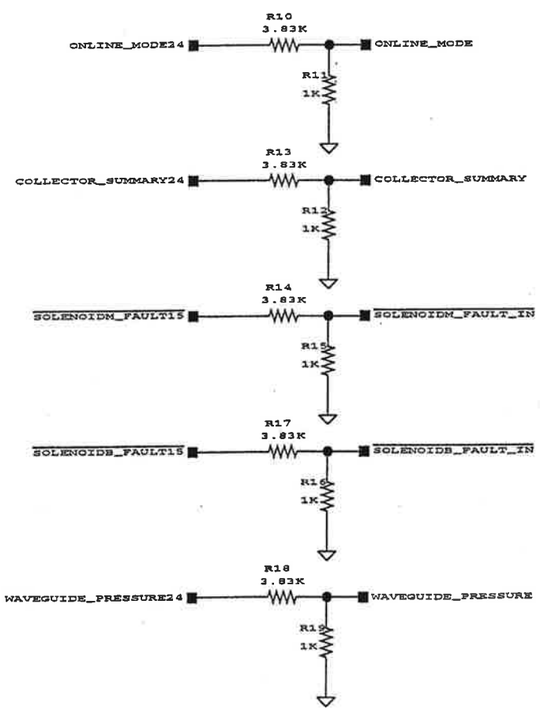

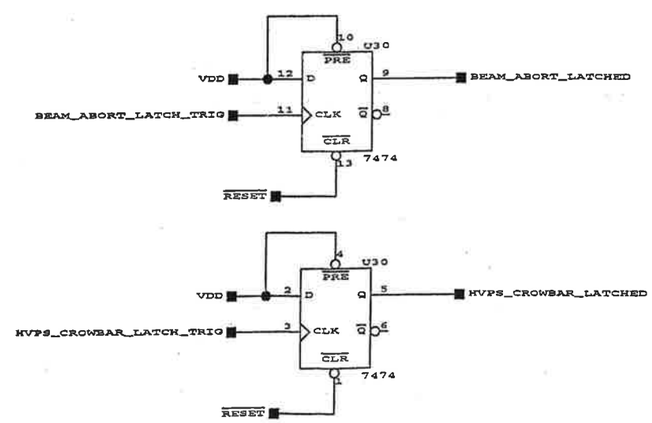

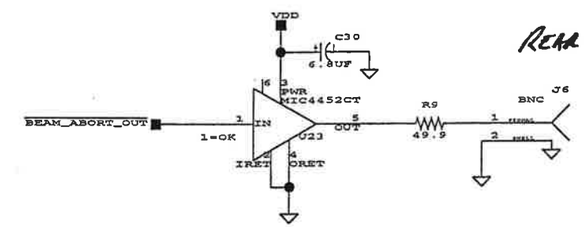

REAR PANEL

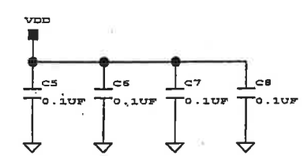

LOGIC

SD-340-311-01-R0

STANFORD LINEAR ACCELERATOR CENTER
U.S. DEPARTMENT OF ENERGY
STANFORD UNIVERSITY STANFORD, CALIFORNIA

PROPRIETARY DATA OF STANFORD UNIVERSITY AND/OR U.S. DEPARTMENT OF ENERGY. RECIPIENT SHALL NOT PUBLISH THE INFORMATION WITHIN UNLESS GRANTED SPECIFIC PERMISSION OF STANFORD UNIVERSITY.

	DATE	APPROVALS
ENGR		
DFTR		
CHKR		

SHEET OF

PEP-II RF SYSTEM
LOCAL PANEL

SD-340-311-01-R0 C

93/56/91

REV	DESCRIPTION	DRFT	CHKR	ENGR APPV	DATE

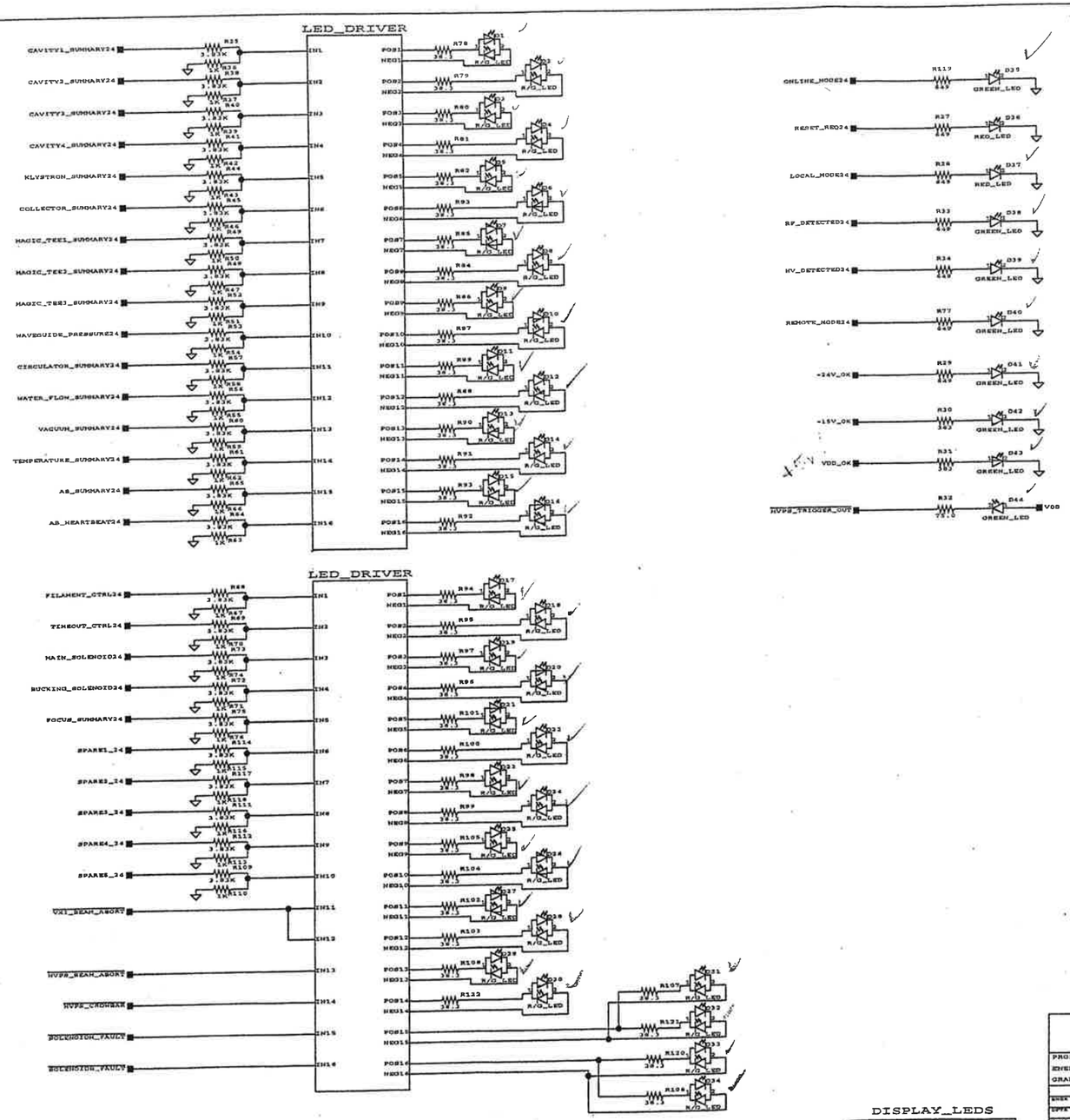

DISPLAY_LEDS

SD-340-311-01-R0

STANFORD LINEAR ACCELERATOR CENTER
U.S. DEPARTMENT OF ENERGY
STANFORD UNIVERSITY STANFORD, CALIFORNIA

PROPRIETARY DATA OF STANFORD UNIVERSITY AND/OR U.S. DEPARTMENT OF ENERGY. RECIPIENT SHALL NOT PUBLISH THE INFORMATION WITHIN UNLESS GRANTED SPECIFIC PERMISSION OF STANFORD UNIVERSITY.

	DATE	APPROVAL
ENGR		
DRFT		
CHKR		

SHEET OF

PEP-II RF SYSTEM
LOCAL PANEL

SD-340-311-01-R0 D

REV	DESCRIPTION	DFTR	CHKR	ENGR APPV	DATE

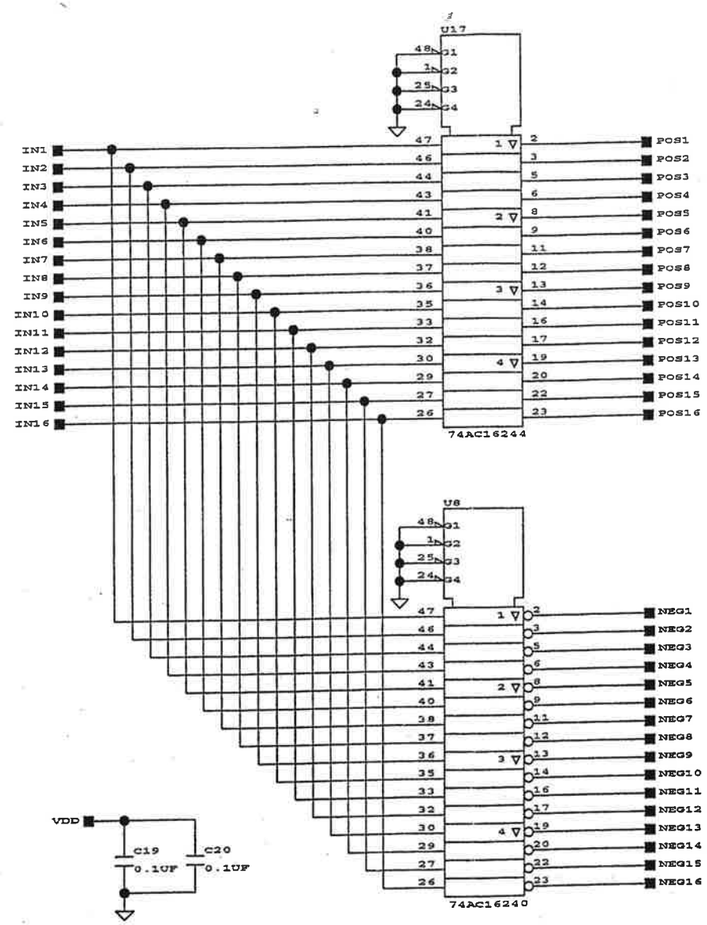

dual_led_driver

SD-340-311-01-R0

STANFORD LINEAR ACCELERATOR CENTER
U.S. DEPARTMENT OF ENERGY
STANFORD UNIVERSITY STANFORD, CALIFORNIA

PROPRIETARY DATA OF STANFORD UNIVERSITY AND/OR U.S. DEPARTMENT OF ENERGY. RECIPIENT SHALL NOT PUBLISH THE INFORMATION WITHIN UNLESS GRANTED SPECIFIC PERMISSION OF STANFORD UNIVERSITY.

	DATE	APPROVALS
ENGR		
DFTR		
CHKR		

SHEET OF

PEP-II RF SYSTEM
LOCAL PANEL

SD-340-311-01-R0 | C

REV	DESCRIPTION	DFTR	CHKR	ENGR APPV	DATE

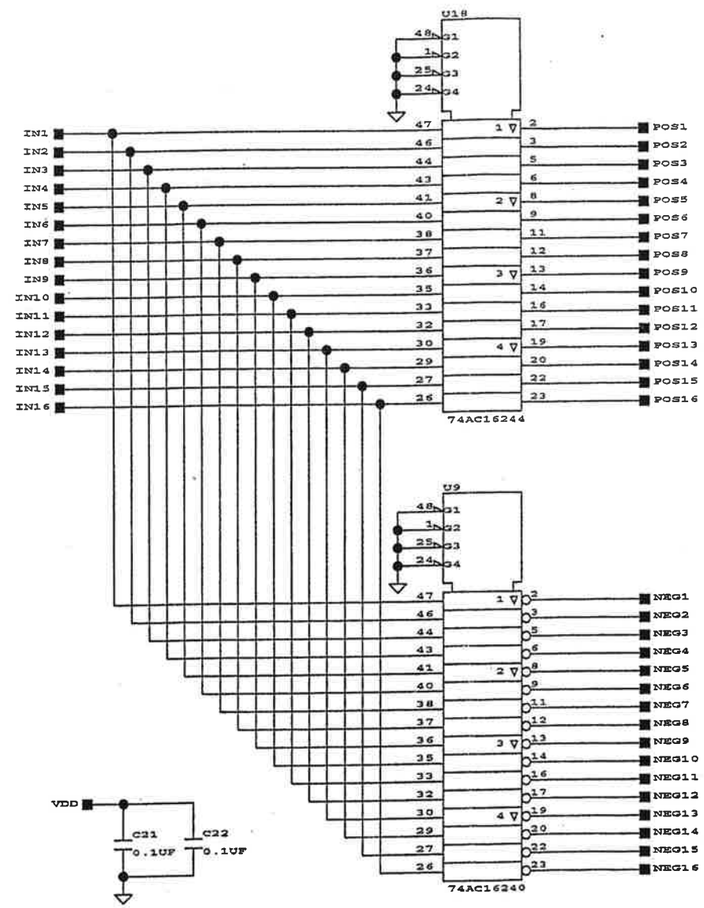

dual_led_driver

SD-340-311-01-R0

STANFORD LINEAR ACCELERATOR CENTER
U.S. DEPARTMENT OF ENERGY
STANFORD UNIVERSITY STANFORD, CALIFORNIA

PROPRIETARY DATA OF STANFORD UNIVERSITY AND/OR U.S. DEPARTMENT OF ENERGY. RECIPIENT SHALL NOT PUBLISH THE INFORMATION WITHIN UNLESS GRANTED SPECIFIC PERMISSION OF STANFORD UNIVERSITY.

	DATE	APPROVALS
ENGR		
DFTR		
CHKR		

SHEET OF

PEP-II RF SYSTEM
LOCAL PANEL

SD-340-311-01-R0 C

S1|69\S1|671\S1

REV	DESCRIPTION	DFTR	CHKR	ENGR APPV	DATE

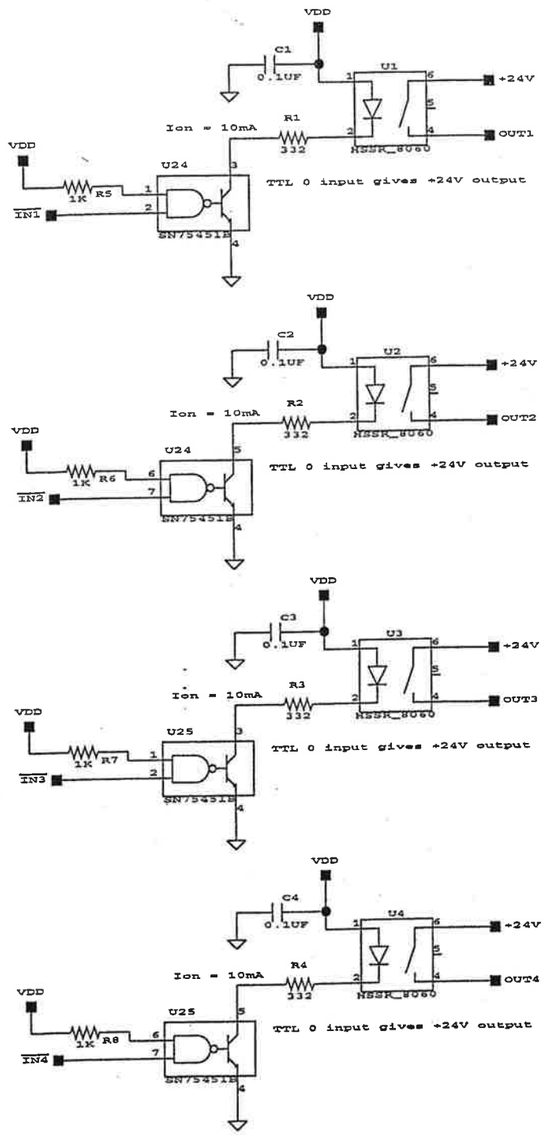

DRIVERS

SD-340-311-01-R0

STANFORD LINEAR ACCELERATOR CENTER
U.S. DEPARTMENT OF ENERGY
STANFORD UNIVERSITY STANFORD, CALIFORNIA

PROPRIETARY DATA OF STANFORD UNIVERSITY AND/OR U.S. DEPARTMENT OF ENERGY. RECIPIENT SHALL NOT PUBLISH THE INFORMATION WITHIN UNLESS GRANTED SPECIFIC PERMISSION OF STANFORD UNIVERSITY.

	DATE	APPROVALS
ENGR		
DFTR		
CHKR		

SHEET OF

PEP-II RF SYSTEM
LOCAL PANEL

SD-340-311-01-R0 C

S1|36\S1

REV	DESCRIPTION	DFTR	CHKR	ENGR APPV	DATE

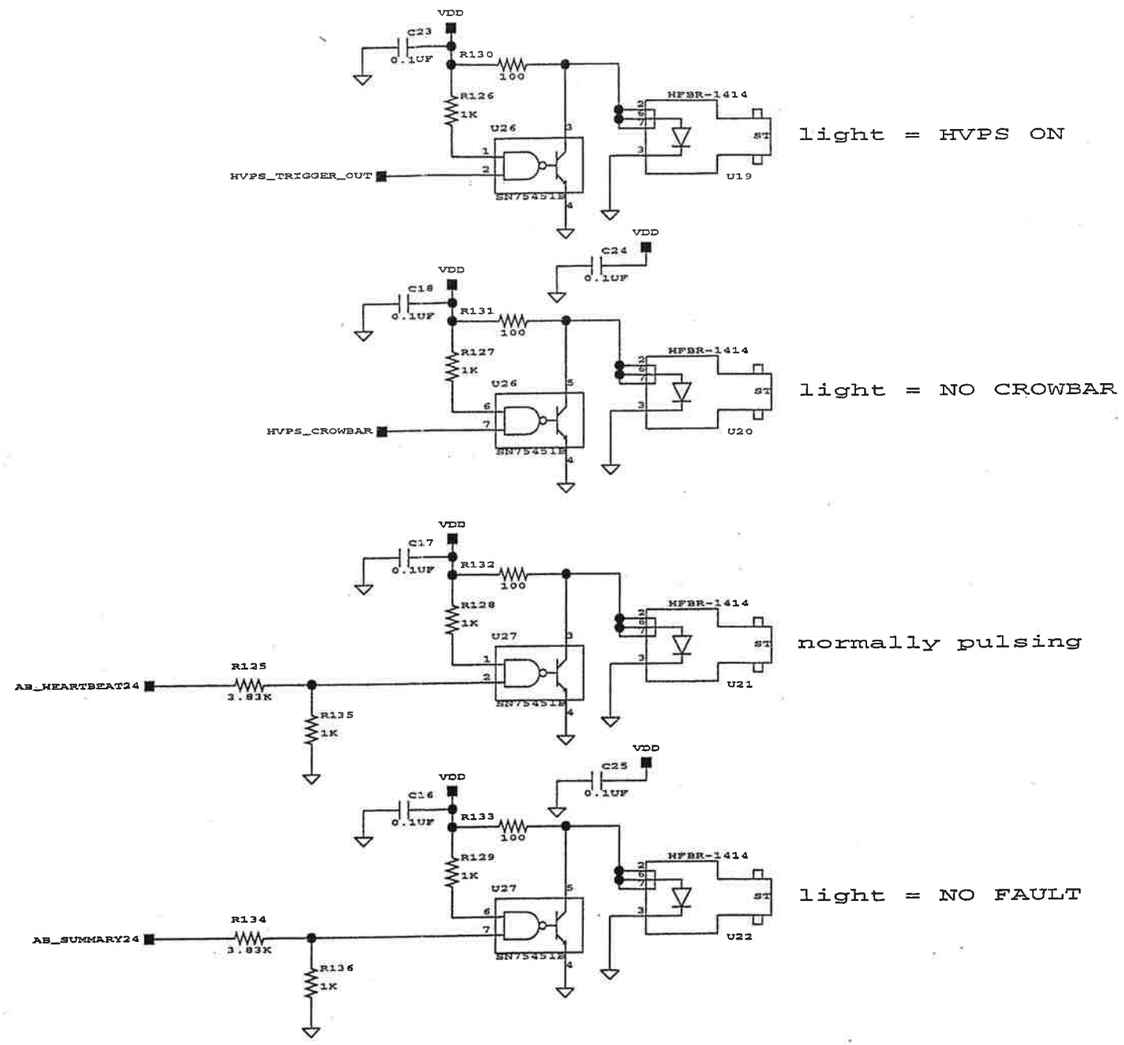

FIBER_TRANSMITTERS

SD-340-311-01-R0

STANFORD LINEAR ACCELERATOR CENTER
U.S. DEPARTMENT OF ENERGY
STANFORD UNIVERSITY STANFORD, CALIFORNIA

PROPRIETARY DATA OF STANFORD UNIVERSITY AND/OR U.S. DEPARTMENT OF ENERGY. RECIPIENT SHALL NOT PUBLISH THE INFORMATION WITHIN UNLESS GRANTED SPECIFIC PERMISSION OF STANFORD UNIVERSITY.

	DATE	APPROVALS
ENGR		
DFTR		
CHKR		

SHEET OF

PEP-II RF SYSTEM
LOCAL PANEL

SD-340-311-01-R0 | C

REV	DESCRIPTION	DFTR	CHKR	ENGR APPV	DATE

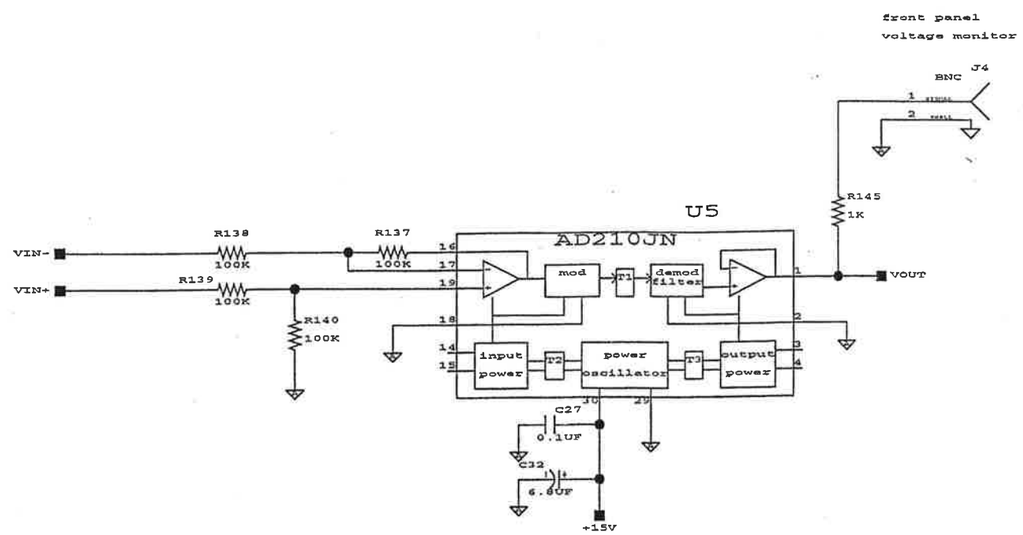

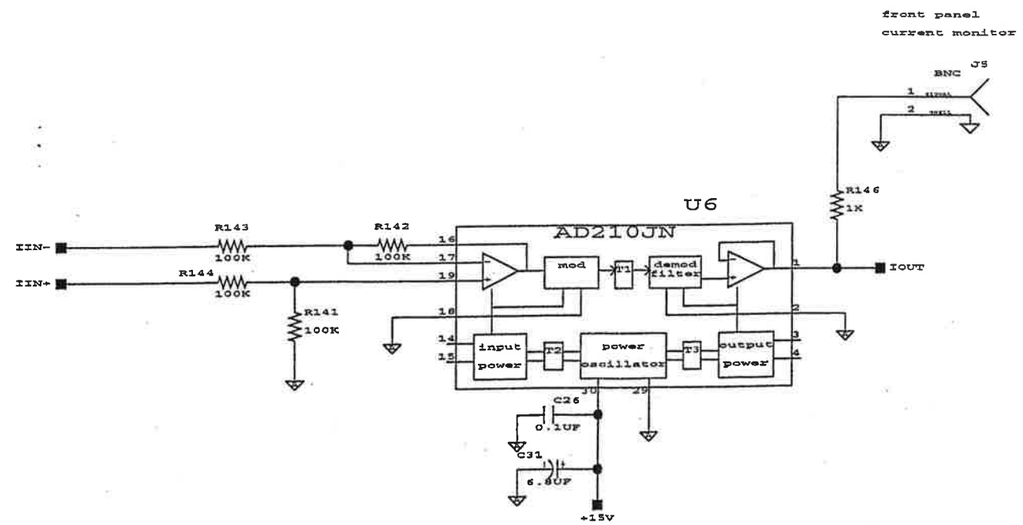

analog_receivers

SD-340-311-01-R0

STANFORD LINEAR ACCELERATOR CENTER
U.S. DEPARTMENT OF ENERGY
STANFORD UNIVERSITY STANFORD, CALIFORNIA

PROPRIETARY DATA OF STANFORD UNIVERSITY AND/OR U.S. DEPARTMENT OF ENERGY. RECIPIENT SHALL NOT PUBLISH THE INFORMATION WITHIN UNLESS GRANTED SPECIFIC PERMISSION OF STANFORD UNIVERSITY.

	DATE	APPROVALS
ENGR		
DFTR		
CHKR		

SHEET OF

PEP-II RF SYSTEM
LOCAL PANEL

SD-340-311-01-R0 C