REV	DESCRIPTION	DFTR	CHKR	COORD DSGNR	PROJ MGR	QUAL ENGR	SYS MGR	ENGR APPV	DATE

PART	DESCRIPTION
U1	VE28
U2	LM78L12ACH
U3	ULN2004A
U4	EP1011
U5	LM339N
U6–U7	LM324N
U8	MC14053BCP
U9	MC14077BCP
DN1	MAD1109P
RN1	MDP1403153G
RN2	MSP08A03124G
RN3	MSP08A03473G
RN4	MSP08A01104G
RN5	MSP08A03152G (17)
RN6	MSP08A03154G
CP1–CP2	PCB–.5
CR1/CR2	1N4746A(18V)/1N5241B(11V)
PP1	435704–8
J1–J2/P1–P2	640588–1/640586–1
J3/P3	350433–1/1–480708–0
J4/P4	640466/1–480763–0
J5/P5	1–350949–0/1–480763–0
P1–P5 SOCKETS	350689–3 (24–18AWG)
J6/P6	103311–5/499568–4
J7/P7	640454–3/640440–3
J8/P8	640456–8/640440–8
J9/P9	640456–8/640440–8
J10/P10	640454–3/65474–001
C1–C2	470µF 50V ECEA1HV471S
C3	22µF 16V ECSF16E22
C4	2.2µF 16V ECSF16E2R2
C11–C13	MKC4 10% 63V
C21–C28	MKS3 5% 63V/100V
C31–C33	FKS3 10% 100V
R1	CW2C 300Ω 5%
R2	CW2C (8) 5%
R3	CW2C .5Ω 5%
R4–R6	CW5 150Ω 5%
R31–R39	1/2W 1.9M Ω 1% RN70
R41–R65	1/4W 1% RN60
PD1–PD2	550–2404 (RED)
PD3	550–2204(GRN)
T1	EP103(120/240),32(240/480),33(350),34(600)
PM1–PM6	EP1019

RN60 RESISTORS (KΩ)		MK/FK CAPACITORS (µF)	
R41	NOTE 1	C11	.33
R42	NOTE 2	C12	.33
R43	NOTE 3	C13	.33
R44	NOTE 4		
R45	NOTE 5	C21	.033
R46	NOTE 6	C22	.033
R47	82.5	C23	.033
R48	100	C24	.033
R49	47.5	C25	.15
R50	100	C26	.15
R51	14.0	C27	.022
R52	NOTE 18	C28	.22
R53	32.4	C29	.10
R54	20.0	C30	.68
R55	3.01		
R56	3.01	C31	.0033
R57	1.00	C32	.001
R58	130	C33	.0033
R59	115		
R60	100		
R61	47.5		
R62	14.0		
R63	10.0		
R64	20.0		
R65	.100		

XFMR VOLTAGE

RESISTOR SELECTION	
R41	
R42	
R43	
R44	
R45	
R52	

SERIAL NOS.

PP1 PHASE REFERENCE SELECTION

POSITION	STATUS	REFERENCE PHASE
1,2,3	OPEN	0°
4,5,6	CLOSED	
1,2,3	CLOSED	–30°
4,5,6	OPEN	

PP1 GATE PULSE PROFILE SELECTION

POSITION	STATUS	PROFILE
7	OPEN	120° BURST
8	CLOSED	
7	CLOSED	2–30° BURSTS
8	CLOSED	
7	CLOSED	2–60° SPACED PULSES
8	OPEN	
7	OPEN	NOT USED
8	OPEN	

NOTES

1. FOR CURRENT SIGNAL INPUT SELECT R41 TO GIVE SIG HI +5.0VDC WITH MAXIMUM SIGNAL CURRENT.
2. SELECT R42 FOR DESIRED GATE DELAY SPAN.
3. SELECT R43 FOR DESIRED GATE DELAY BIAS.
4. SELECT R44 FOR DESIRED SOFT–START TIME.
5. SELECT R45 FOR DESIRED SOFT–STOP TIME.
6. FACTORY SELECTED R46.
7. FOR 50HZ, INSTALL P10 IN POSITIONS 1 AND 2.
8. SELECT R2 RESISTANCE FOR +24V CONTROL VOLTAGE.
9. SELECT PP1 SHUNTS AS SHOWN IN TABLE ABOVE.
10. FOR OFF–BOARD PHASE REFERENCES:
    INSTALL R37–R39 AND J5.
    OMIT R31–R33 AND T1.
11. J7 PROVIDED FOR TEST REFERENCE INPUTS.
12. FOR GATING PARALLELED SCRs CONNECT FCOAUX60 AUXILIARY BOARD VIA CABLE TO J8.
13. MAKE +12V CONNECTIONS TO J3–4 OR TO J6–8 TO ENABLE SCR GATING.
14. FOR FOUR–QUADRANT SIX–PULSE GATING:
    CUT +12V TRACE TO J6–19 AND J3–5.
    CONNECT P TO +12V TO ENABLE "A" BRIDGE.
    CONNECT P TO COM TO ENABLE "B" BRIDGE.
    CONNECT FCOAUX60 BOARD VIA CABLE TO J9.
15. FOR FOUR–QUADRANT THREE–PULSE GATING:
    CUT +12V TRACE TO J3–5 AND J6–19.
    CONNECT JUMPER FROM U4–28 TO COM.
    CONNECT P TO +12V TO ENABLE +A, +B, +C SCRs.
    CONNECT P TO COM TO ENABLE –A, –B, –C SCRs.
16. FOR FOUR QUADRANT TRANSITION INHIBIT:
    INSTALL U9, RN6, C29, C30 AND R65.
    CUT TRACE FROM U9–3 TO +12V.
17. FOR TWO–QUADRANT 12–PULSE GATING:
    CUT +12V TRACE TO J3–5 AND J6–19.
    CONNECT JUMPER FROM J6–4 TO J6–19.
    CONNECT FCOAUX60 BOARD VIA CABLE TO J9.
    CHANGE RN5 TO 6–PIN SIP NETWORK.
    MAKE C27=.047uF, REPLACE R64 WITH JUMPER.
18. R52 = 150K FOR 0V < SIG HI < 5.0V
    R52 = 249K FOR .9V < SIG HI < 5.9V

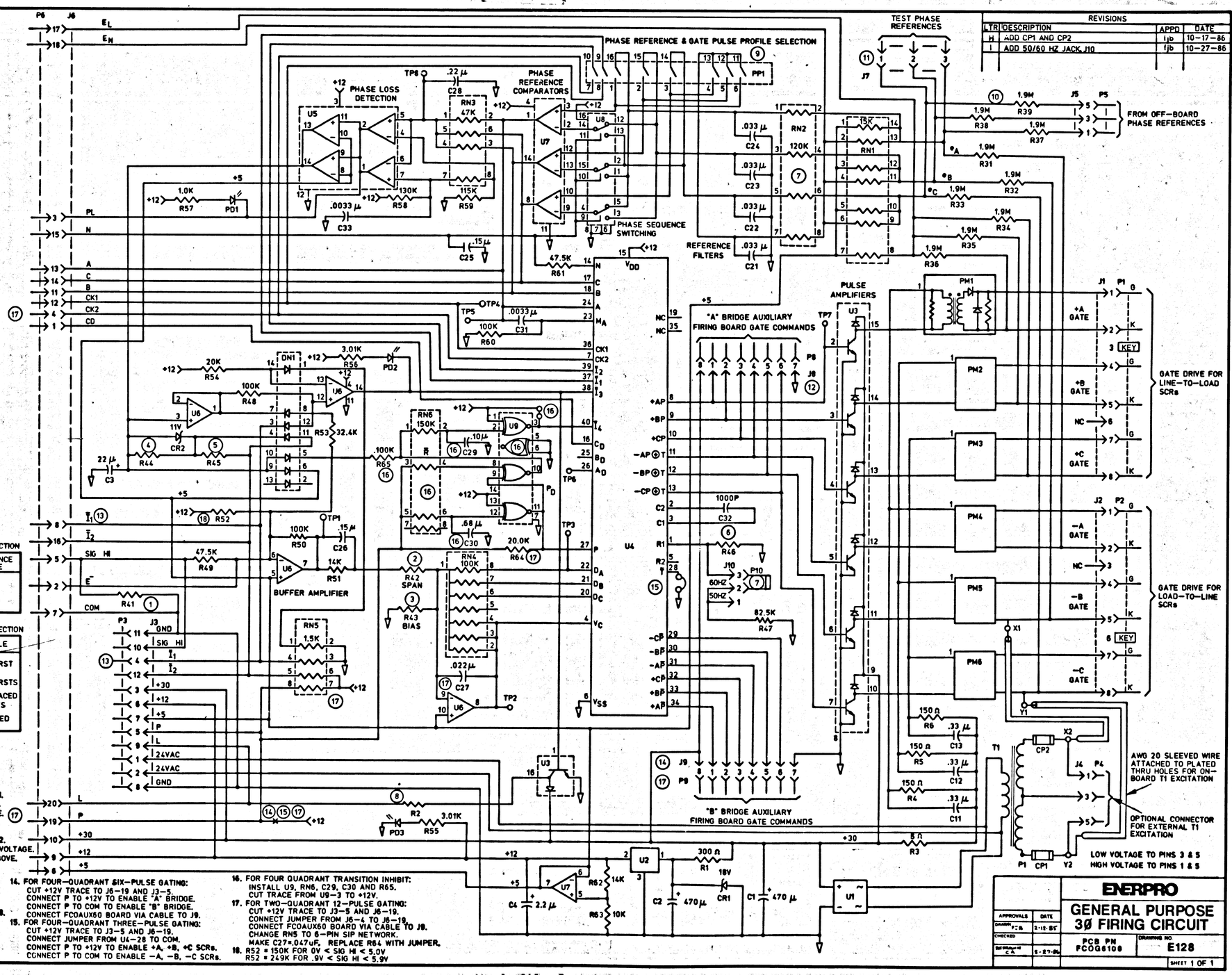

REVISIONS			
LTR	DESCRIPTION	APPD	DATE
H	ADD CP1 AND CP2	fjb	10–17–86
I	ADD 50/60 HZ JACK J10	fjb	10–27–86

ENERPRO

GENERAL PURPOSE 3Ø FIRING CIRCUIT

PCB PN FCOG6100

DRAWING NO E128

SHEET 1 OF 1

APPROVALS	DATE
DRAWN F.B.	2-18-86
CHECKED	
RELEASED C.A.	6-27-86

DIMENSIONING AND TOLERANCING IS IN ACCORDANCE WITH ANSI Y14.5M.

UNLESS OTHERWISE SPECIFIED DIMENSIONS ARE IN INCHES. TOLERANCES: BREAK EDGES .005-.015 INTERNAL CORNERS .015 R MAX FRACTIONS ± DEC .X ± .XX ± .XXX ± ANGLES ± ALL SURFS

SCALE: DO NOT SCALE DRAWING

STANFORD LINEAR ACCELERATOR CENTER
U. S. DEPARTMENT OF ENERGY
STANFORD UNIVERSITY STANFORD, CALIFORNIA

	DATE	APPROVAL	DATE
ENGR		SYS MGR	
COORD DSGNR		PROJ MGR	
DFTR	9/29/87	ENGR	11/10/87
CHKR	9/30/87	QUAL ENGR	

ITEM NO.	PREF	BASE	SUFF	TITLE OR DESCRIPTION	QTY.
	STOCK OR PART NO.				

NEXT ASSEMBLY:

SCHEMATIC DIAGRAM– ENERPRO GENERAL PURPOSE 3 PHASE FIRING CIRCUIT, PCB PN FCOG6100

SD-237-230-12-RO F

SD-237-230-12-RO F

SH 1 OF 1

MFRO