REV	DESCRIPTION	DRFT	CHKR	ENGR APPV	DATE
C1	ADDED NOTES FOR NLCTA	WSG			5/21/03

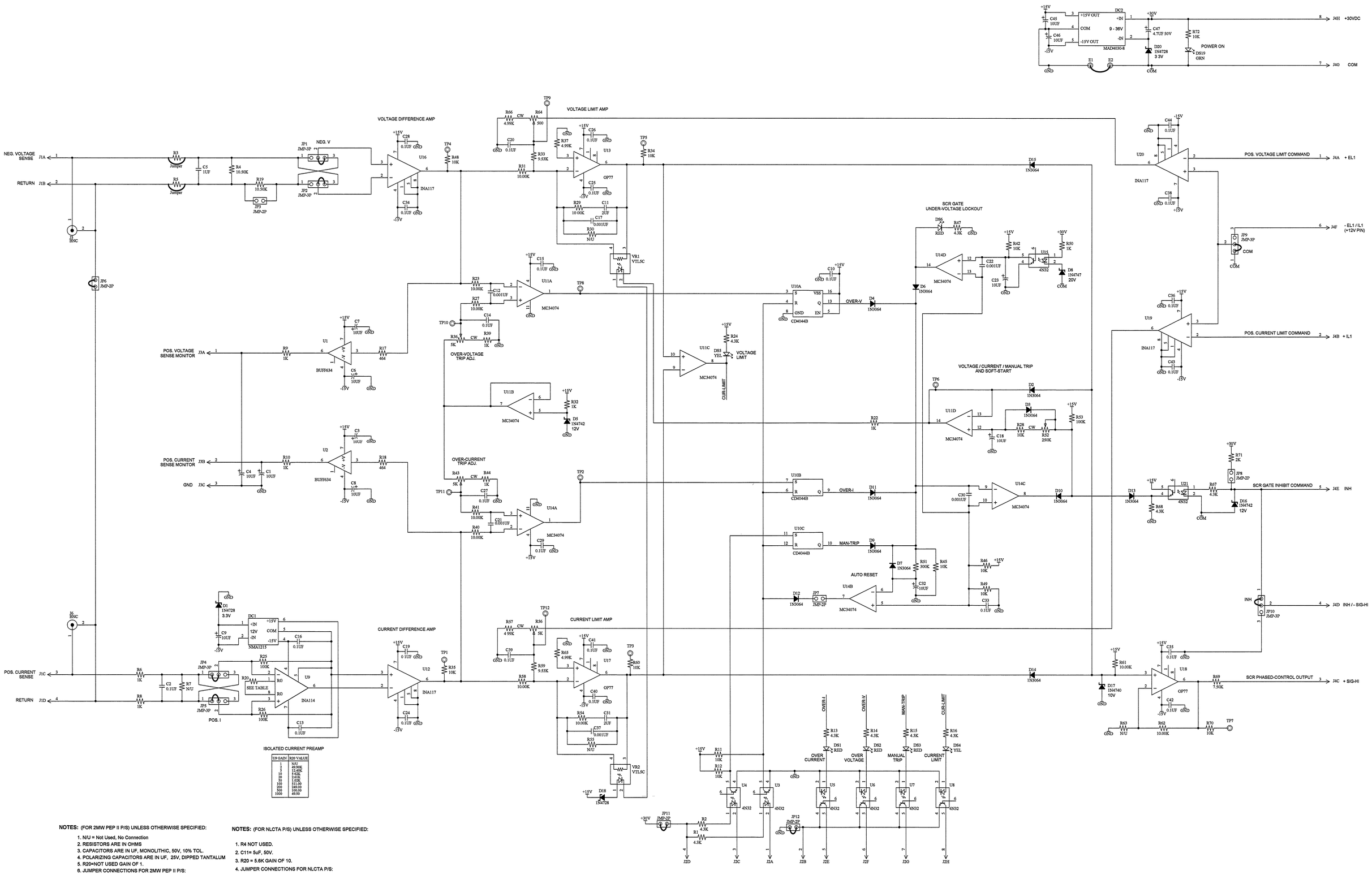

NOTES: (FOR 2MW PEP II P/S) UNLESS OTHERWISE SPECIFIED:

1. N/U = Not Used, No Connection
2. RESISTORS ARE IN OHMS
3. CAPACITORS ARE IN UF, MONOLITHIC, 50V, 10% TOL.
4. POLARIZING CAPACITORS ARE IN UF, 25V, DIPPED TANTALUM
5. R20=NOT USED GAIN OF 1.
6. JUMPER CONNECTIONS FOR 2MW PEP II P/S:

	PIN1	PIN2	PIN3
JP1	○	●	○
JP2	○	●	○
JP3	○	●	○
JP4	●	●	○
JP5	●	●	○
JP6	●	○	○
JP7	○	○	○
JP8	○	○	○
JP9	●	●	○
JP10	●	●	○
JP11	●	●	○
JP12	●	●	○

NOTES: (FOR NLCTA P/S) UNLESS OTHERWISE SPECIFIED:

1. R4 NOT USED.
2. C11= 5uF, 50V.
3. R20 = 5.6K GAIN OF 10.
4. JUMPER CONNECTIONS FOR NLCTA P/S:

	PIN1	PIN2	PIN3
JP1	●	●	○
JP2	○	●	○
JP3	○	●	○
JP4	●	●	○
JP5	●	●	○
JP6	○	○	○
JP7	○	○	○
JP8	●	●	○
JP9	○	●	●
JP10	○	●	●
JP11	○	●	●
JP12	○	●	●

ISOLATED CURRENT PREAMP

U9 GAIN	R20 VALUE
1	N/U
2	49.99K
5	12.49K
10	5.62K
20	2.61K
50	1.00K
100	511.00
200	249.00
500	100.00
1000	49.90

PEP2 RF SYS ENERPRO V/A REG

STANFORD LINEAR ACCELERATOR CENTER
U. S. DEPARTMENT OF ENERGY
STANFORD UNIVERSITY STANFORD, CALIFORNIA

PROPRIETARY DATA OF STANFORD UNIVERSITY AND/OR U.S. DEPARTMENT OF ENERGY. RECIPIENT SHALL NOT PUBLISH THE INFORMATION WITHIN UNLESS GRANTED SPECIFIC PERMISSION OF STANFORD UNIVERSITY

	DATE	APPROVALS
ENGR: M. NGUYEN	9-17-97	CHECKED: 9-20-02 M.NGUYEN
DRFT: T. PHAN	9-17-97	
CHKR: J. OLSZEWSKI	10-5-99	J.OLSZEWSKI

CAD FILE NAME23723014.SD1 | SHEET 1 OF 1

PEP II RF SYSTEM
ENERPRO VOLTAGE AND
CURRENT REGULATOR BOARD

SD-237-230-14-C1 | E