REV	DESCRIPTION	DRFT	CHKR	ENGR APPV	DATE
C1	R6,8,10, 12,14 &17 WAS 200K, R23 & 29 WAS 100K JUMPER OUT D9	WSG	JO	MN	09/03
C2	CHANGE R19 TO 1K OHM PER ECO A0763 ADD ZENER DIODE 1N4740A D12	JO	JO	MN	11/04

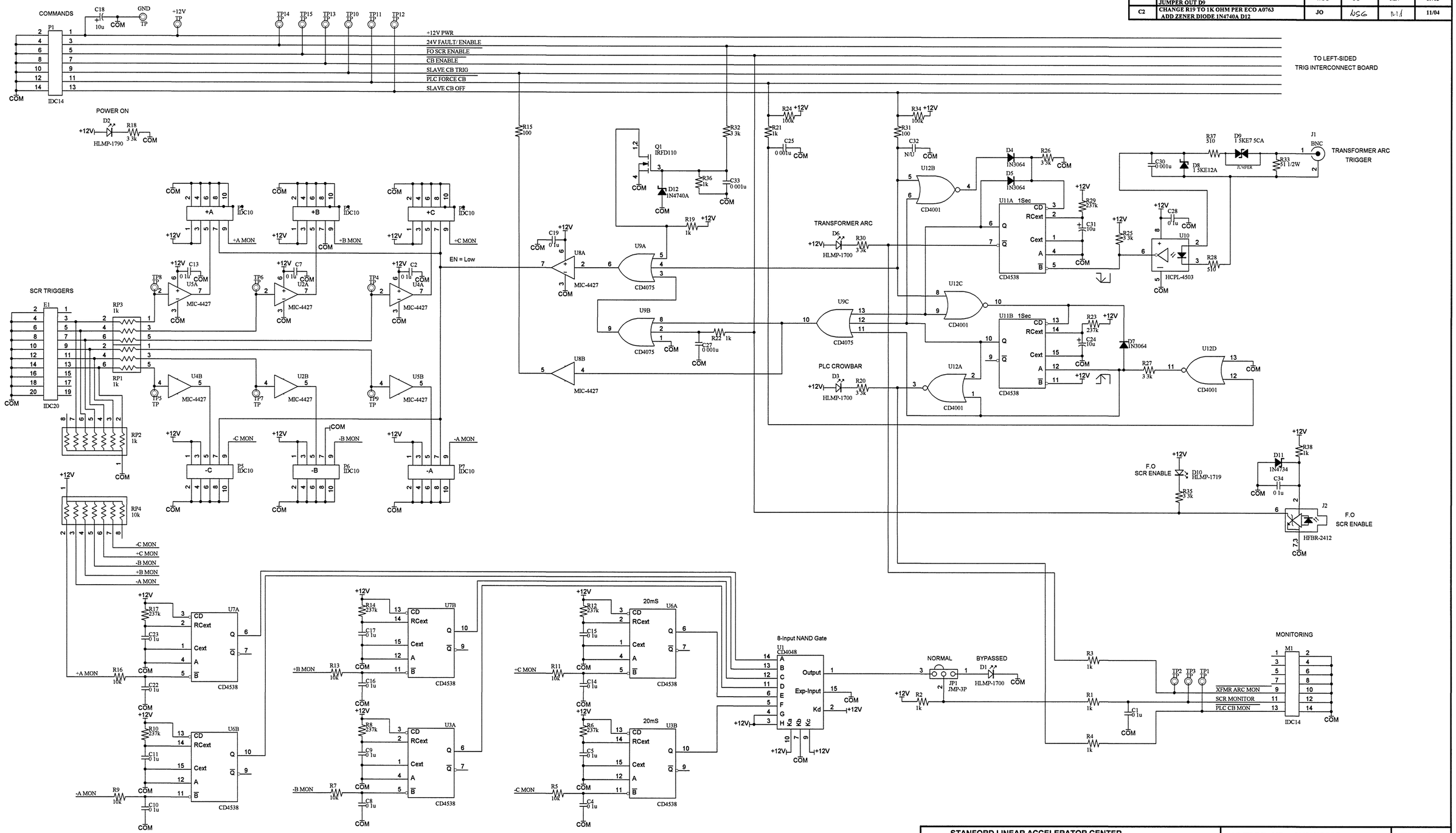

STANFORD LINEAR ACCELERATOR CENTER U. S. DEPARTMENT OF ENERGY STANFORD UNIVERSITY STANFORD, CALIFORNIA	CAD FILE NAME: 73079307.DDB	SHEET 1 OF 1
PROPRIETARY DATA OF STANFORD UNIVERSITY AND/OR U S DEPARTMENT OF ENERGY RECIPIENT SHALL NOT PUBLISH THE INFORMATION WITHIN UNLESS GRANTED SPECIFIC PERMISSION OF STANFORD UNIVERSITY	PEPII RF SYS 2MW KLYSTRON PWR SPLY SCR CONTROL DRIVER RIGHT SIDE TRIGGER INTERCONNECT BD	

	DATE	APPROVALS
ENGR: M. NGUYEN		M. NGUYEN
DRFT: M. NGUYEN	07/31/02	
CHKR: J. OLSZEWSKI		

SD-730-793-07-C2 D

PEP2 2MW PS RS TRIG INTCON BD

REV 2