REV	DESCRIPTION	DRFT	CHKR	ENGR APPV	DATE
C1	R22,27,29, 31,34 &36 WAS 200K, R6 & 13 WAS 100K	WSG	JO	MN	09/03

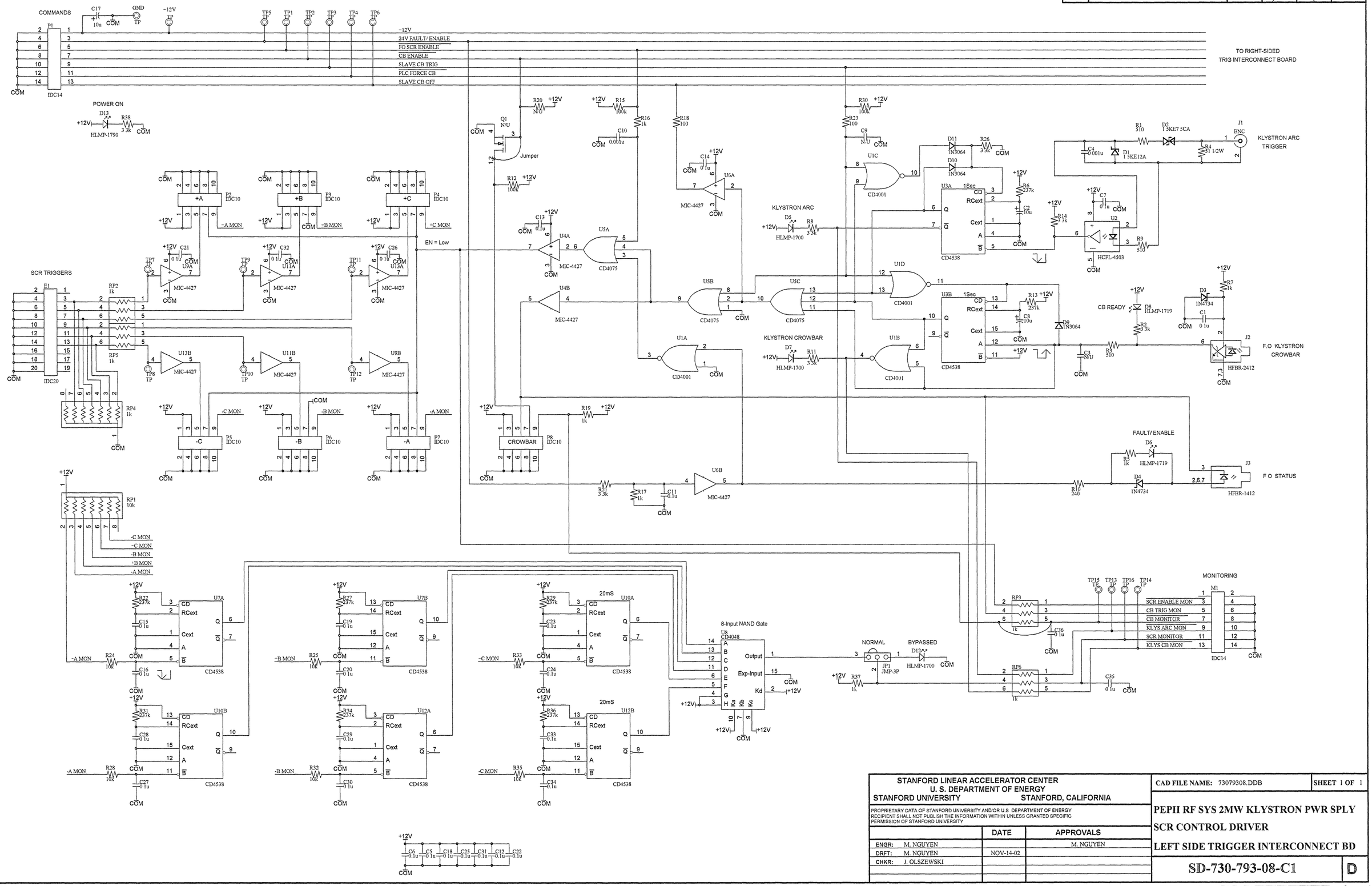

STANFORD LINEAR ACCELERATOR CENTER
U. S. DEPARTMENT OF ENERGY
STANFORD UNIVERSITY STANFORD, CALIFORNIA

PROPRIETARY DATA OF STANFORD UNIVERSITY AND/OR U.S DEPARTMENT OF ENERGY
RECIPIENT SHALL NOT PUBLISH THE INFORMATION WITHIN UNLESS GRANTED SPECIFIC
PERMISSION OF STANFORD UNIVERSITY

	DATE	APPROVALS
ENGR: M. NGUYEN		M. NGUYEN
DRFT: M. NGUYEN	NOV-14-02	
CHKR: J. OLSZEWSKI		

CAD FILE NAME: 73079308.DDB

SHEET 1 OF 1

PEPII RF SYS 2MW KLYSTRON PWR SPLY
SCR CONTROL DRIVER
LEFT SIDE TRIGGER INTERCONNECT BD

SD-730-793-08-C1 D

PEP2 2MW PS LS TRIG INTCON BD

Rev. C1