REV	DESCRIPTION	DRN	CHK	APP	DATE
1	CHANGED CAPACITOR CONNECTIONS IN DC PWR SUPPLY. ADDED TERM. FOR H.V. TIME METER. IDENTIFIED VAC CONT. AUX CONTACTS. LOCATED CKT BKR. REVISED VAC CONTACTOR INTERNAL WIRING TO SUIT	L.J.			
2	CHANGED LOCATION OF BUS THROAT CONN CUT OUT, CURRENT XFMR'S & AMMETERS. ADDED DET. 1, & RELAYS 27, MX, IP, & RR	L.J.			
3	REVISED PHYSICAL DIMENSIONS FOR SWITCHGEAR VACUUM CONTACTOR	RPC			

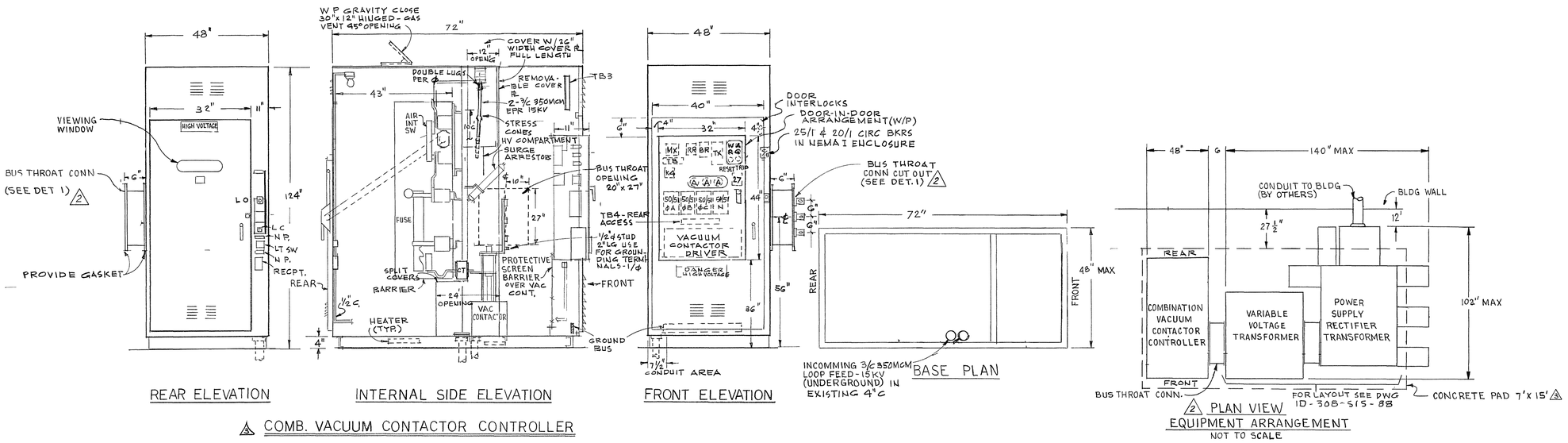

COMB. VACUUM CONTACTOR CONTROLLER

2 PLAN VIEW
EQUIPMENT ARRANGEMENT
NOT TO SCALE

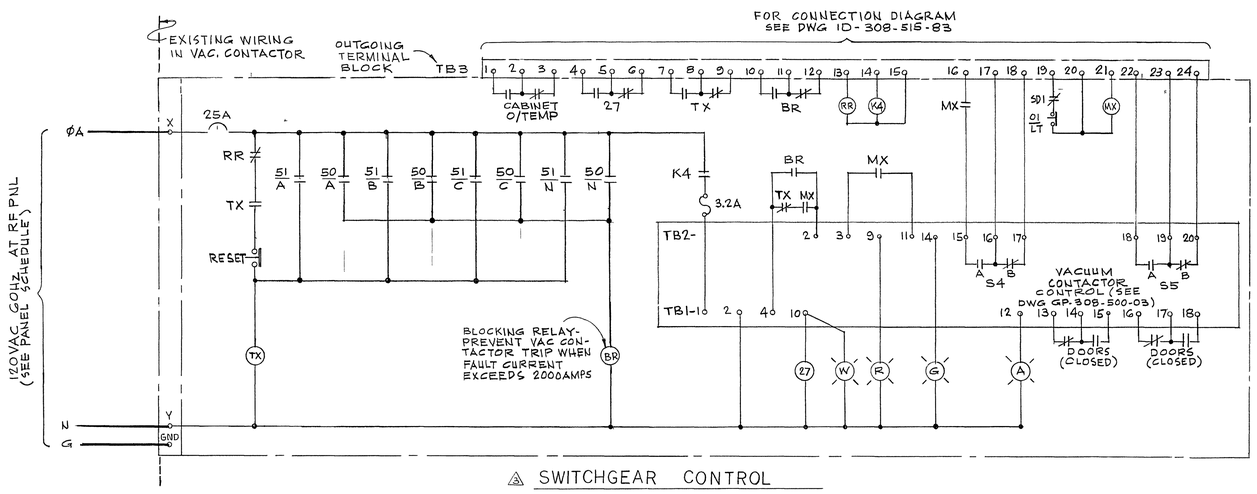

SWITCHGEAR CONTROL SCHEMATIC

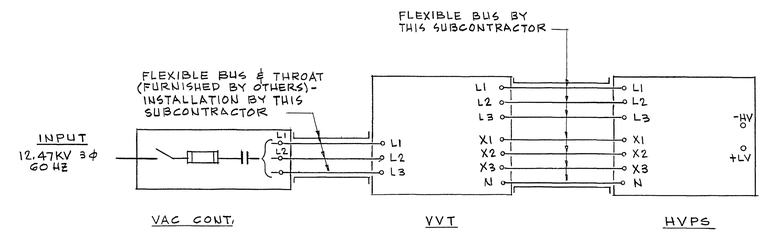

SYSTEM SCHEMATIC
(FOR VVT & HVPS SCHEMATIC DIAGRAM - SEE DWG ID-308-515-08

NOTES:
1. FOR VACUUM CONTACTOR CONTROL SCHEMATIC AND OPERATION INSTRUCTION SEE DWG GP-308-500-03
2. FOR EXTERNAL WIRING CONNECTIONS SEE DWG ID 308-515-83
3. FOR BLOCK DIAGRAM SEE DWG ID 308-515-81

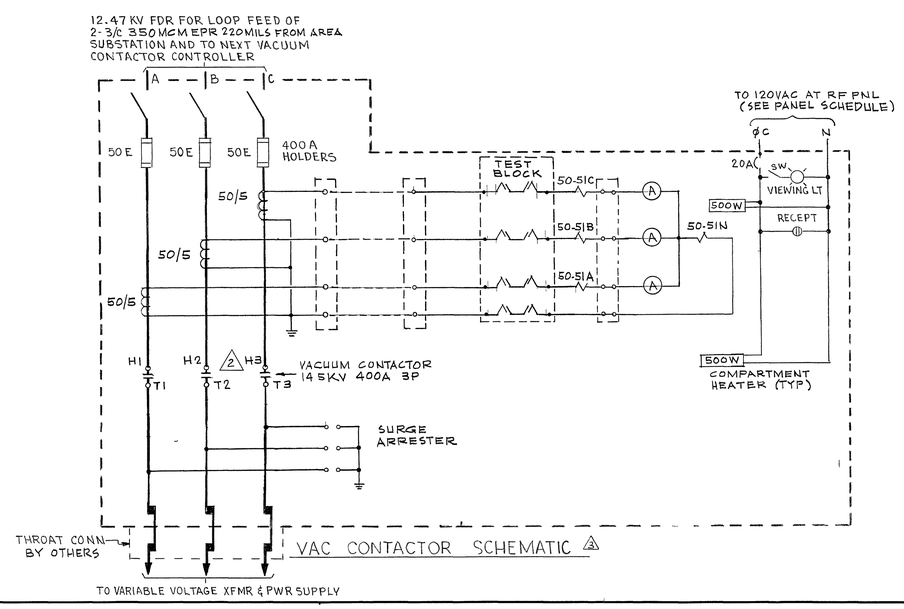

VAC CONTACTOR SCHEMATIC

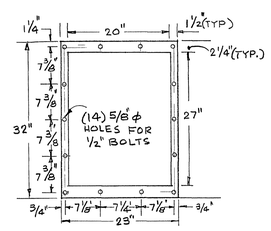

DETAIL 1 - THROAT FLANGE
NOT TO SCALE

LEGEND

27	UNDER VOLTAGE RELAY
MX	REMOTE CONT RELAY-24VDC
IP	INTERPOSING RELAY-24VDC
RR	REMOTE RESET RELAY-24VDC
50-51	OVER CURRENT RELAY 2-6A WITH 20-40A INSTANTANEOUS ATTACHMENT W TYPE CO-6 OR EQUAL
50-51 N	GROUNDING OVER CURRENT RELAY .5-2.5A WITH 20-40A INSTANTANEOUS ATTACHMENT W TYPE CO-6 OR EQUAL
01 LT	LOCAL CONTROL SWITCH-TRIP
TX	AUX TRIPPING RELAY
BR	BLOCKING RELAY
M	MAIN OPERATING AND HOLDING COILS

ITEM NO.	PREFIX	BASE	SUFFIX	TITLE OR DESCRIPTION	QTY
	STOCK OR PART NO.				

ALL DIMENSIONS ARE IN MILLIMETERS UNLESS OTHERWISE SPECIFIED
DO NOT SCALE DRAWING
SCALE NONE
NEXT ASSEMBLY

LAWRENCE BERKELEY LABORATORY
University of California Berkeley Calif
PEP
STANFORD LINEAR ACCELERATOR CENTER
Stanford University Stanford Calif

UNLESS OTHERWISE SPECIFIED TOLERANCES
SURFACE FINISH (MICROINCHES)
ENGR A. A. Tseng
DFTS L. Johnson 6 23 77
CHKD
APPROVALS

THIRD ANGLE PROJECTION

POSITRON-ELECTRON PROJECT
ELECTRICAL SYSTEMS
12.47 KV OUTDOOR METAL ENCL.
COMB. VAC. CONTACTOR CONTROLLER
SCHEMATIC DIAG. & GEN ARRG'MT

GP-308-500-01-R3 E
PREFIX BASE SUFFIX REVISION SIZE

GP-308-500-01-R3 E