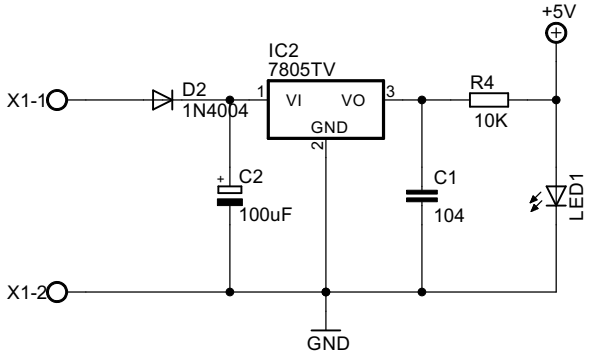
+5V
IC2
7805TV
X1-1
D2
1N4004
VI
VO
GND
R4
10K
C2
100uF
C1
104
LED1
X1-2
GND

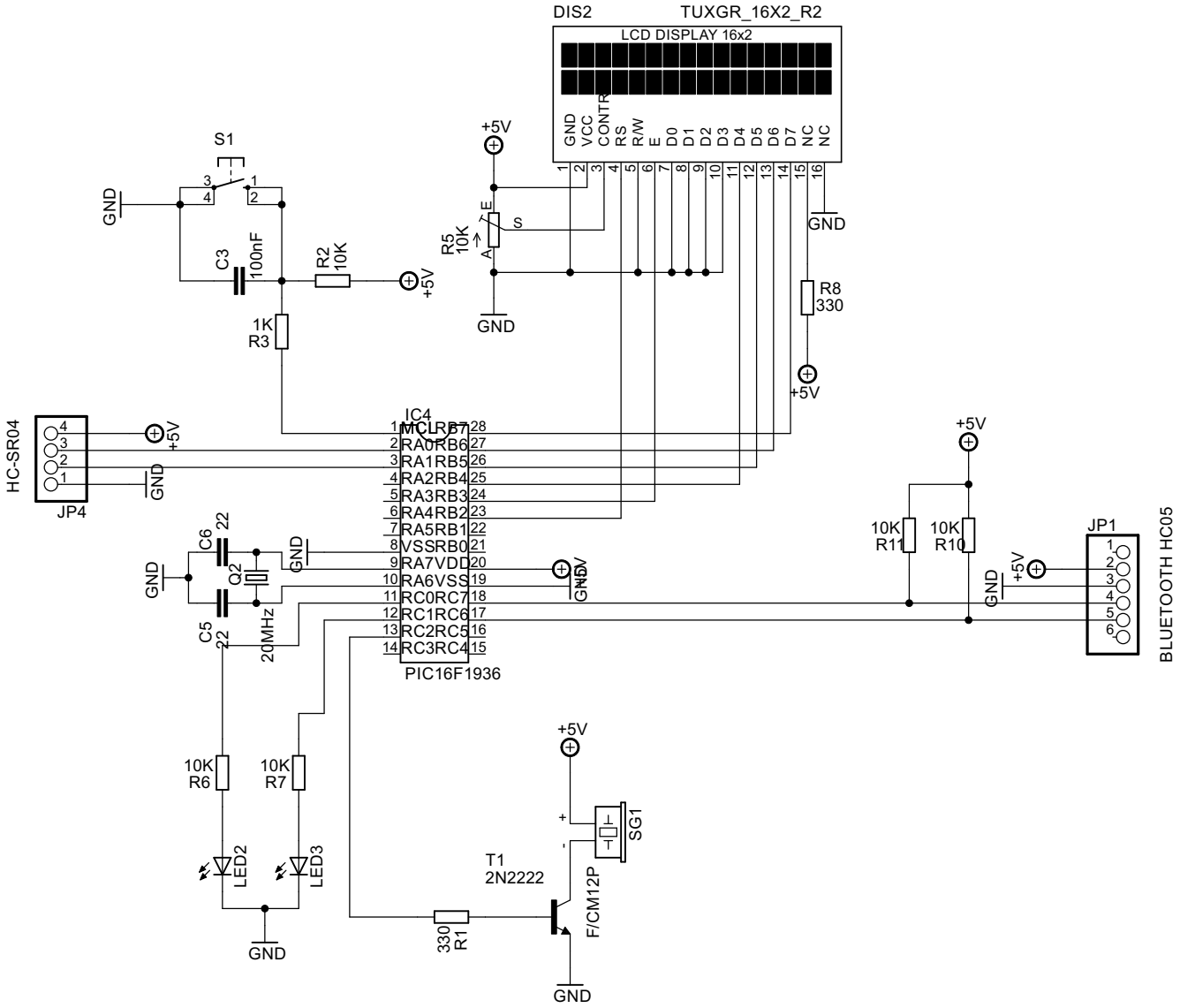
DIS2
TUXGR_16X2_R2
LCD DISPLAY 16x2
GND
VCC
CONTR
RS
R/W
E
D0
D1
D2
D3
D4
D5
D6
D7
NC
NC
S1
GND
C3
100nF
R2
10K
+5V
1K
R3
R5
10K
R8
330
HC-SR04
JP4
IC4
MCLRRA7
RA0RB6
RA1RB5
RA2RB4
RA3RB3
RA4RB2
RA5RB1
VSSRB0
RA7VDD
RA6VSS
RC0RC7
RC1RC6
RC2RC5
RC3RC4
PIC16F1936
C6
22
Q2
20MHz
C5
22
10K
R11
10K
R10
JP1
BLUETOOTH HC05
10K
R6
10K
R7
LED2
LED3
T1
2N2222
330
R1
SG1
F/CM12P