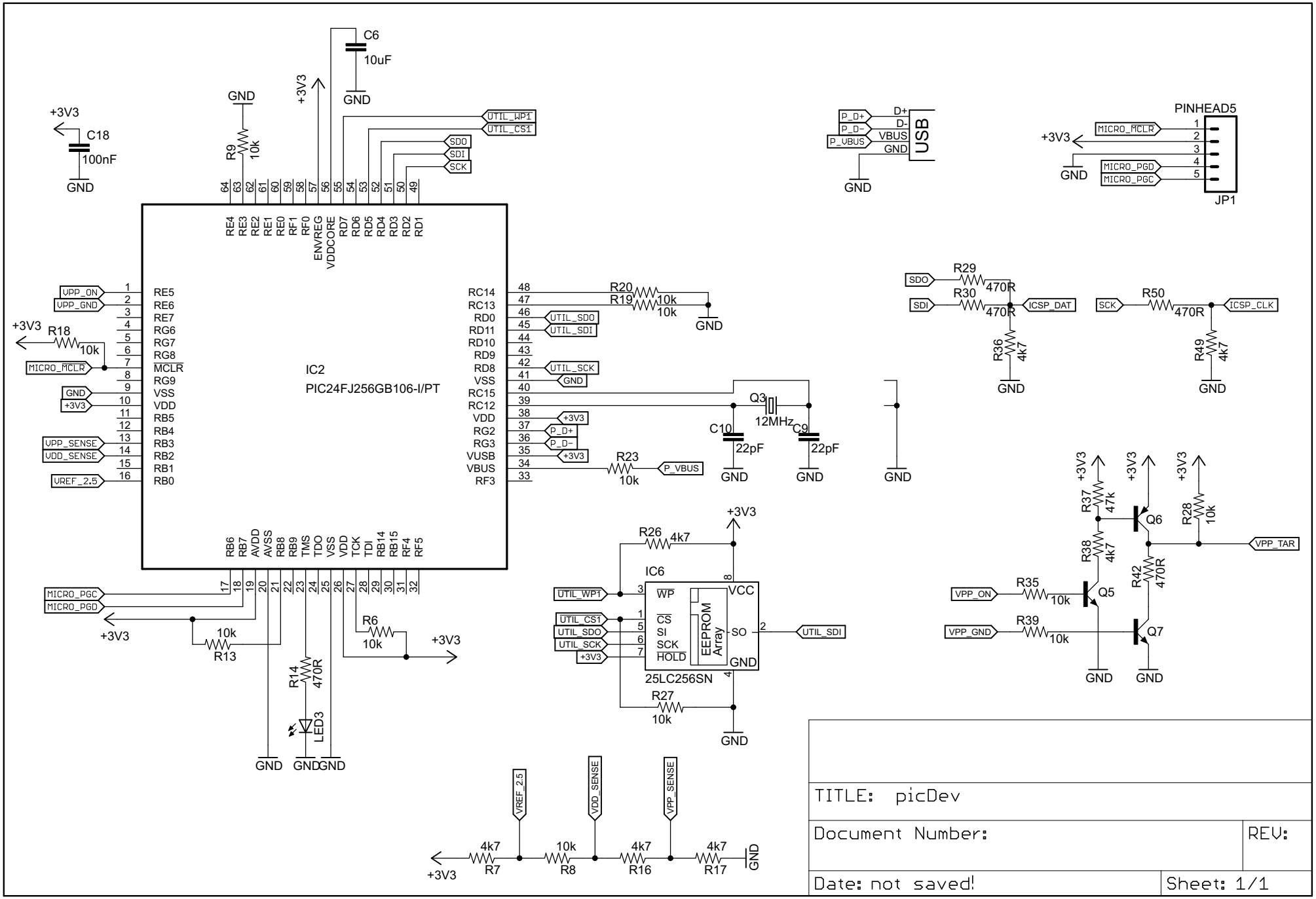
IC2
PIC24FJ256GB106-I/PT
IC6
25LC256SN
EEPROM Array
USB
PINHEAD5
JP1
C6 10uF
C18 100nF
R9 10k
R18 10k
R20 10k
R19 10k
R23 10k
Q3 12MHz
C10 22pF
C9 22pF
R29 470R
R30 470R
R36 4k7
R50 470R
R49 4k7
R26 4k7
R27 10k
R6 10k
R13 10k
R14 470R
LED3
R37 47k
R38 4k7
R28 10k
R42 470R
R35 10k
R39 10k
Q5
Q6
Q7
R7 4k7
R8 10k
R16 4k7
R17 4k7
+3V3
GND
VPP_ON
VPP_GND
VPP_SENSE
VDD_SENSE
VREF_2.5
MICRO_MCLR
MICRO_PGC
MICRO_PGD
UTIL_WP1
UTIL_CS1
UTIL_SDO
UTIL_SDI
UTIL_SCK
SDO
SDI
SCK
P_D+
P_D-
P_VBUS
ICSP_DAT
ICSP_CLK
VPP_TAR
TITLE: picDev
Document Number:
REV:
Date: not saved!
Sheet: 1/1

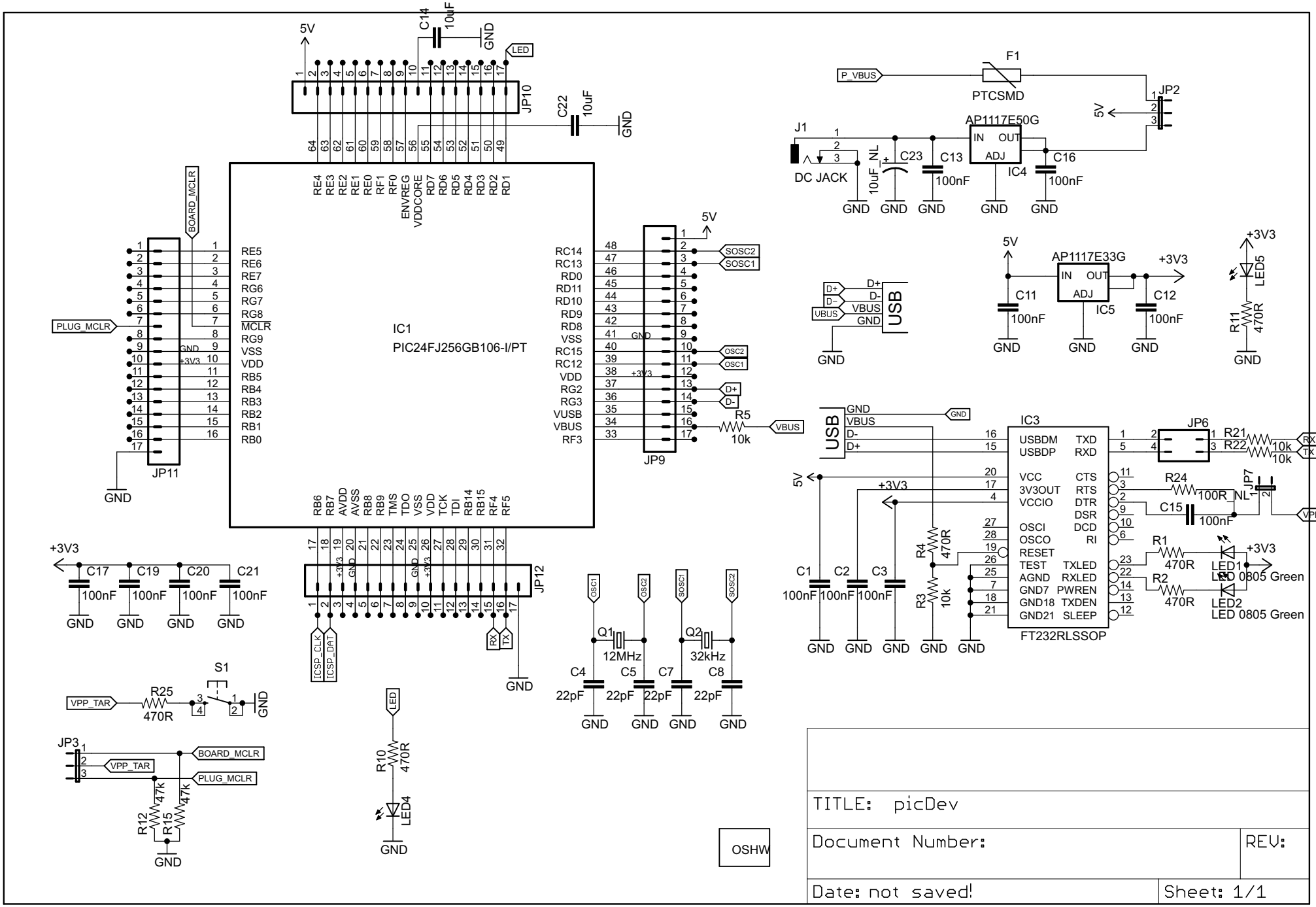
IC1
PIC24FJ256GB106-I/PT
JP10
JP11
JP9
JP12
JP2
JP3
JP6
JP7
IC3
FT232RLSSOP
IC4
AP1117E50G
IC5
AP1117E33G
F1
PTCSMD
J1
DC JACK
USB
S1
Q1
12MHz
Q2
32kHz
LED1
LED 0805 Green
LED2
LED 0805 Green
LED4
LED5
5V
+3V3
GND
P_VBUS
BOARD_MCLR
PLUG_MCLR
VPP_TAR
ICSP_CLK
ICSP_DAT
SOSC1
SOSC2
OSC1
OSC2
VBUS
RX
TX
LED
TITLE: picDev
Document Number:
REV:
Date: not saved!
Sheet: 1/1
OSHW