USB

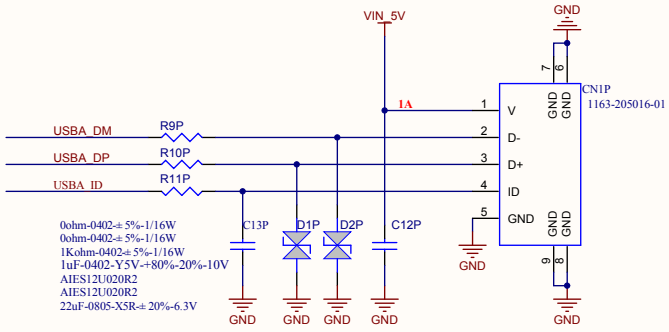

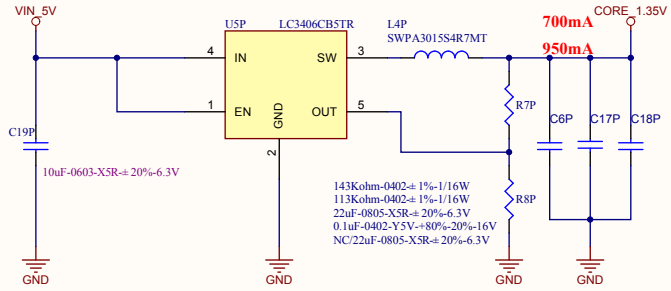

1.344V

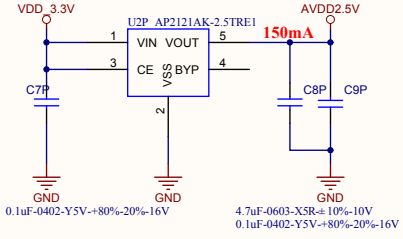

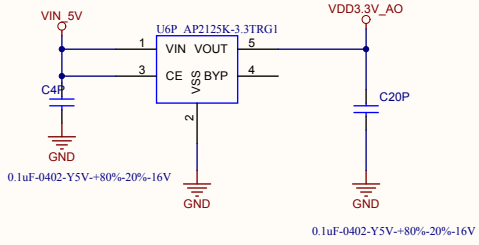

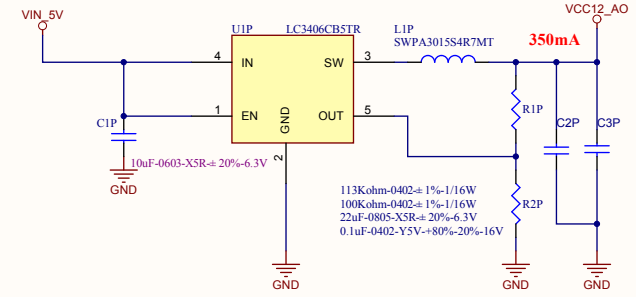

1.278V

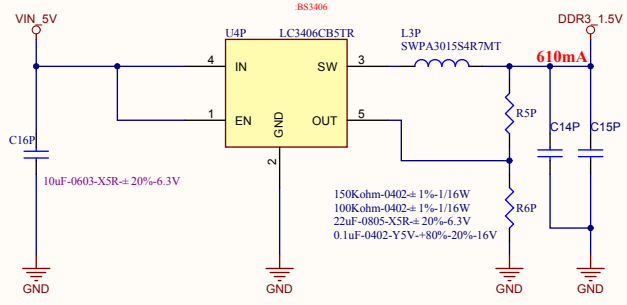

1.50V

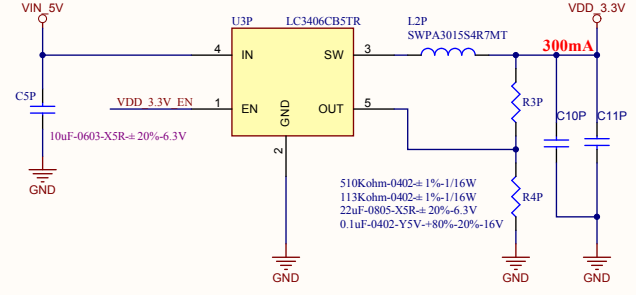

3.308V

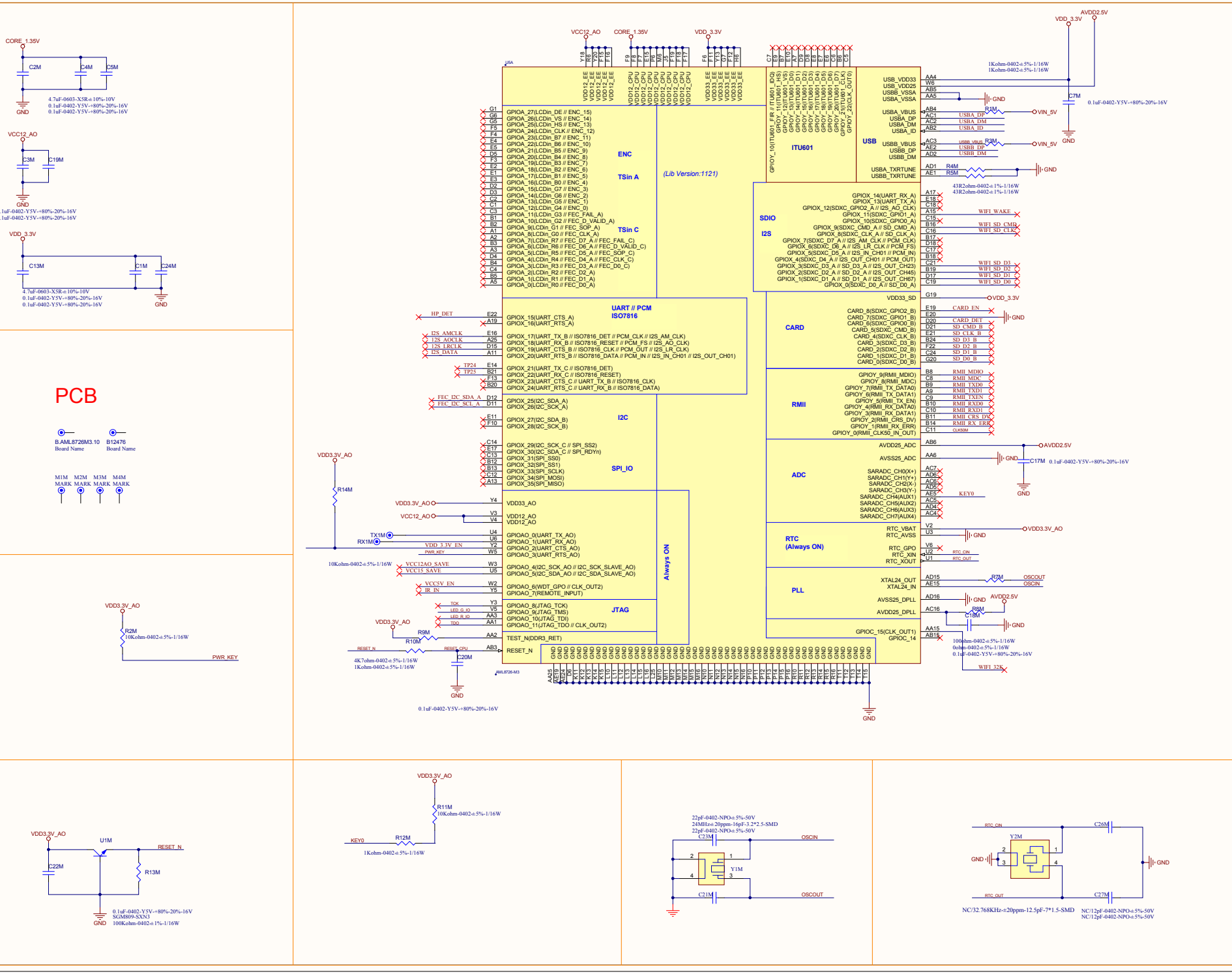
PCB
ITU601
(Lib Version:1121)
ENC
TSin A
TSin C
SDIO
I2S
UART // PCM
ISO7816
I2C
SPI_IO
JTAG
Always ON
CARD
RMII
ADC
RTC
(Always ON)
PLL
USB
CORE_1.35V
VDD_3.3V
VCC12_AO
AVDD2.5V
VIN_5V
GND

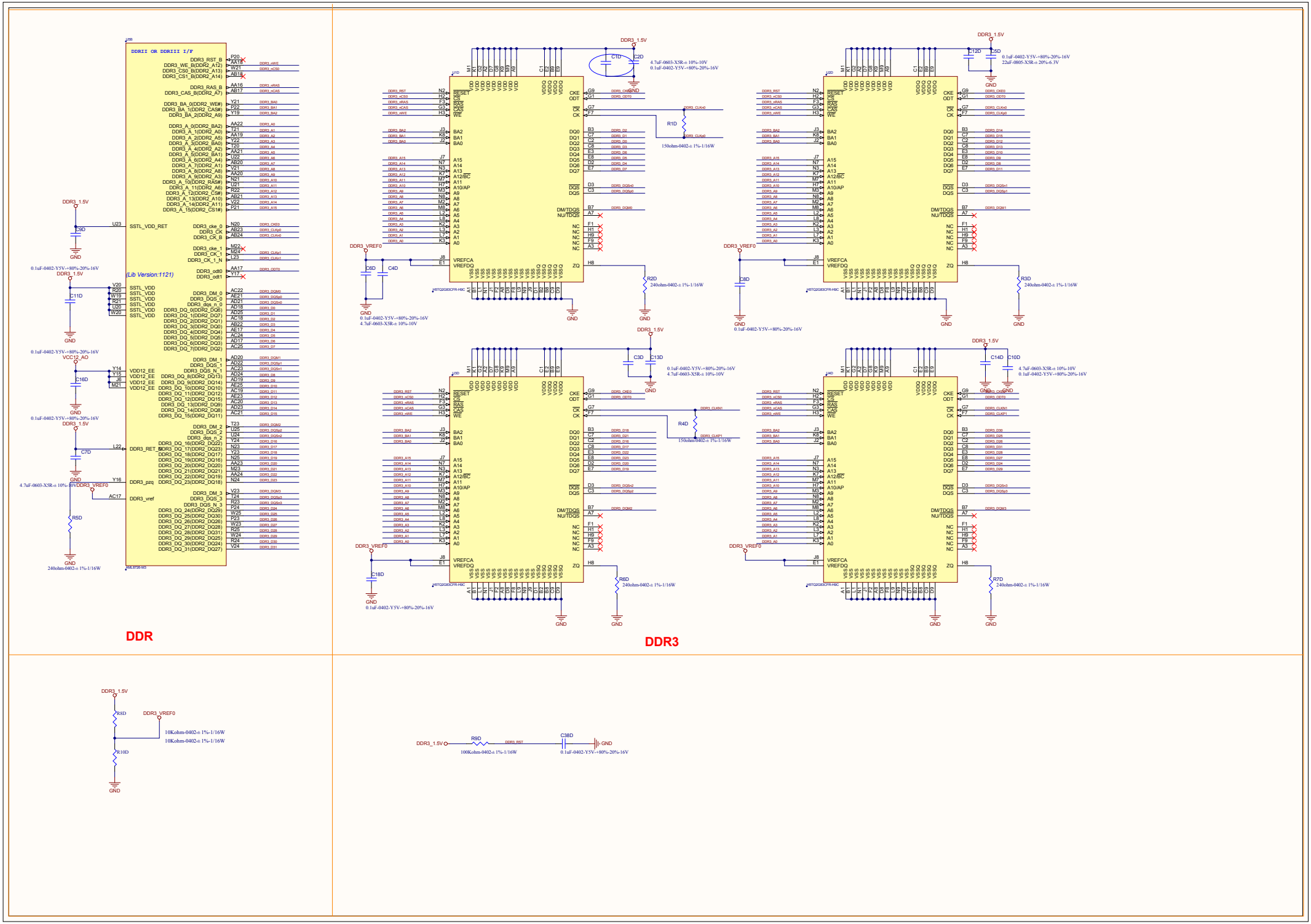
DDR
DDR3
DDRII OR DDRIII I/F
(Lib Version:1121)
DDR3_1.5V
DDR3_VREF0
VCC12_AO
GND
240ohm-0402-± 1%-1/16W
10Kohm-0402-± 1%-1/16W
100Kohm-0402-± 1%-1/16W
0.1uF-0402-Y5V-+80%-20%-16V
4.7uF-0603-X5R-± 10%-10V
150ohm-0402-± 1%-1/16W

Power ON Config

```
NAND_D6  NAND_D5
   1     1   Boot from SD_B


NAND_ALE
  1        JTAG ENABLE
  0        JTAG DISABLE


NAND_D7
  1     ROM BOOT (NAND/iNand/SD_card)
  0 NAND_D6?
      1     ROM BOOT (NAND/iNand/SD_card)
      0     Boot From SPI_A
NAND_D4  NAND_D3 NAND_D2
     1     1    1    Boot from nand without RB
     1     1    0    Nand with RB
     1     0    X    SPI nor flash romboot
     0     1    1    Boot from iNAND uses SDIOC
     0     1    0    Boot from iNAND uses SDIOB
     0     0    1    Boot from iNAND uses SDIOA
```

R11F NAND_D2

NC/4K7ohm-0402-± 5%-1/16W

GND

NAND_D2&D3&D4&D5&D6&D7 ALE

Boot from nand without RB

U5C AML8726-M3

NAND&iNAND&SPI FLASH I/F

(Lib Version:1121)

BOOT_17(SPI_NOR_CS_n_A)	E12	SPI_CS
BOOT_8(NAND_CE0)	C23	NAND_CS1
BOOT_9(NAND_CE1)	A23	NAND_CS2
BOOT_16(NAND_DQS)	C20	NAND_nDQS
BOOT_15(NAND_REn_WR)	E13	NAND_nRE
BOOT_14(NAND_WEn_CLK // SPI_NOR_C_A)	A21	NAND_nWE
BOOT_13(NAND_CLE // SPI_NOR_Q_A)	B15	NAND_CLE
BOOT_12(NAND_ALE // SPI_NOR_D_A)	B22	NAND_ALE
BOOT_10(NAND_CE2 // NAND_RB0 // SDXC_CMD_C)	B23	NAND_R/B#
BOOT_11(NAND_CE3 // NAND_RB1 // SDXC_CLK_C)	C22	NAND_CS4
BOOT_0(NAND_IO_0 // SDXC_D0_C)	D24	NAND_D0
BOOT_1(NAND_IO_1 // SDXC_D1_C)	D22	NAND_D1
BOOT_2(NAND_IO_2 // SDXC_D2_C)	C25	NAND_D2
BOOT_3(NAND_IO_3 // SDXC_D3_C)	F21	NAND_D3
BOOT_4(NAND_IO_4 // SDXC_D4_C)	B25	NAND_D4
BOOT_5(NAND_IO_5 // SDXC_D5_C)	F14	NAND_D5
BOOT_6(NAND_IO_6 // SDXC_D6_C)	D14	NAND_D6
BOOT_7(NAND_IO_7 // SDXC_D7_C)	A24	NAND_D7
BSD_EN	AB11	

VDD_3.3V R7F 10Kohm-0402-± 5%-1/16W

R13F 4K7ohm-0402-± 5%-1/16W

Pull high enable boundary scan

GND

Flash

TSOP_NAND

U1F MT29F64G08CBAAAWP:A

Normal // Micron,ONFI // Toshiba

1	NC // NC // VCC		NC // VSSQ // VSS4	48	GND
2	NC // NC // VSS		(I/O15)	47	
3	NC		(I/O14)	46	
4	NC // R/BY4 // NC		(I/O13)	45	
5	NC // NC // R/BY3 // NC		I/O7	44	NAND_D7
6	R/BY2		I/O6	43	NAND_D6
7	R/BY1	NAND_R/B#	I/O5	42	NAND_D5
8	RE // RE(W/R) // RE	NAND_nRE	I/O4	41	NAND_D4
9	CE1	NAND_CS1	(I/O12)	40	
10	CE2	NAND_CS2	NC // VCCQ // PSL	39	
11	NC		NC // VSP1 // VCCQ	38	
12	VCC		VCC	37	
13	VSS		VSS	36	
14	NC // CE3 // NC		NC // VSP2(DQS) // NC	35	NAND_nDQS
15	NC // CE4 // NC		NC // VCCQ // VCCQ	34	
16	CLE	NAND_CLE	(I/O11)	33	
17	ALE	NAND_ALE	I/O3	32	NAND_D3
18	WE // WE(CLK) // WE	NAND_nWE	I/O2	31	NAND_D2
19	WP	WP#	I/O1	30	NAND_D1
20	NC // VSP3 // NC		I/O0	29	NAND_D0
21	NC		(I/O10)	28	
22	NC		(I/O9)	27	
23	NC // NC // VSS2		(I/O8)	26	
24	NC // NC // VCC2		NC // VSSQ // VSS3	25	

VDD_3.3V R15F 0ohm-0402-± 5%-1/16W

R16F 0ohm-0402-± 5%-1/16W

R17F NC/0ohm-0402-± 5%-1/16W

GND GND GND

单片TSOP flash时仅贴此片

VDD_3.3V R14F 4K7ohm-0402-± 5%-1/16W

C5F 0.1uF-0402-Y5V-+80%-20%-16V

GND

VDD_3.3V CLOSE TO NAND

C1F C2F 4.7uF-0603-X5R-± 10%-10V 0.1uF-0402-Y5V-+80%-20%-16V

GND

HDMI

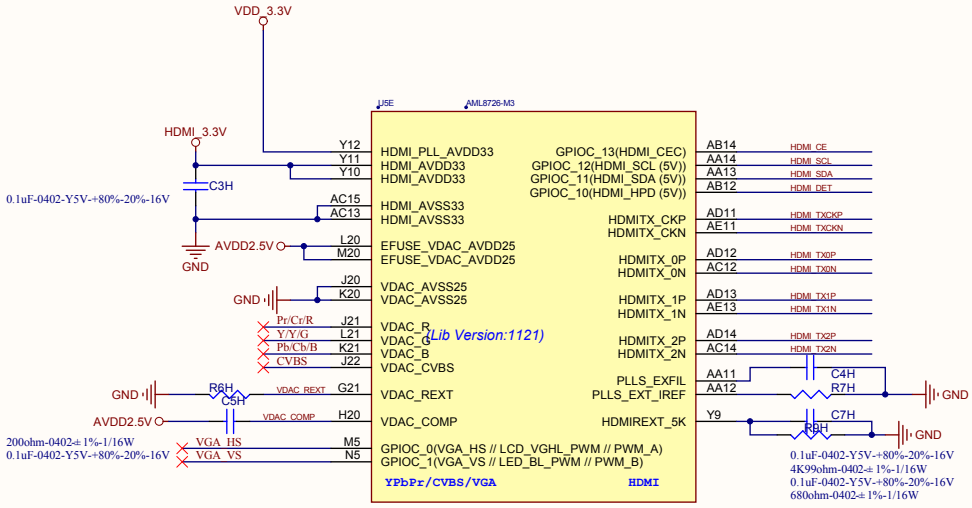

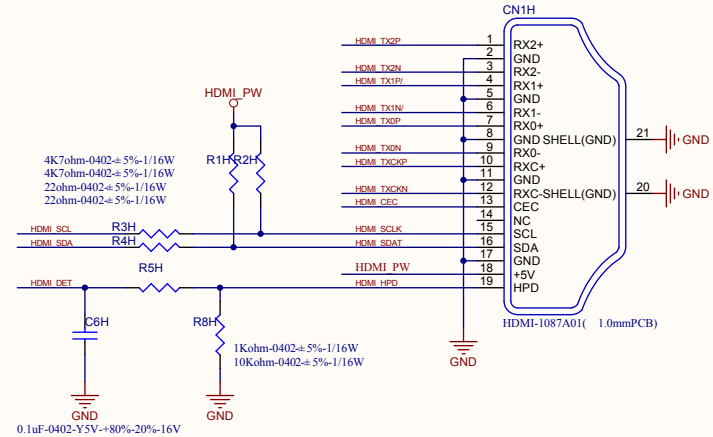

HDMI

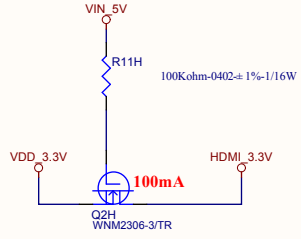

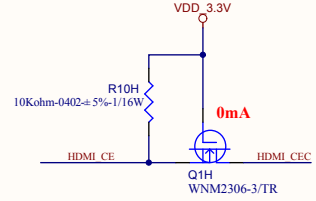

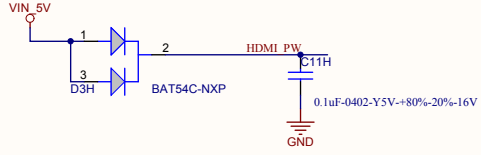

ESD

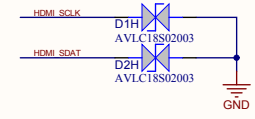

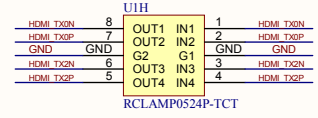

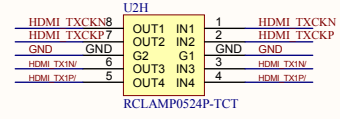

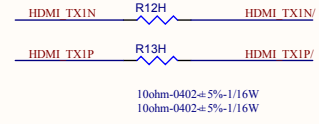

GPIO

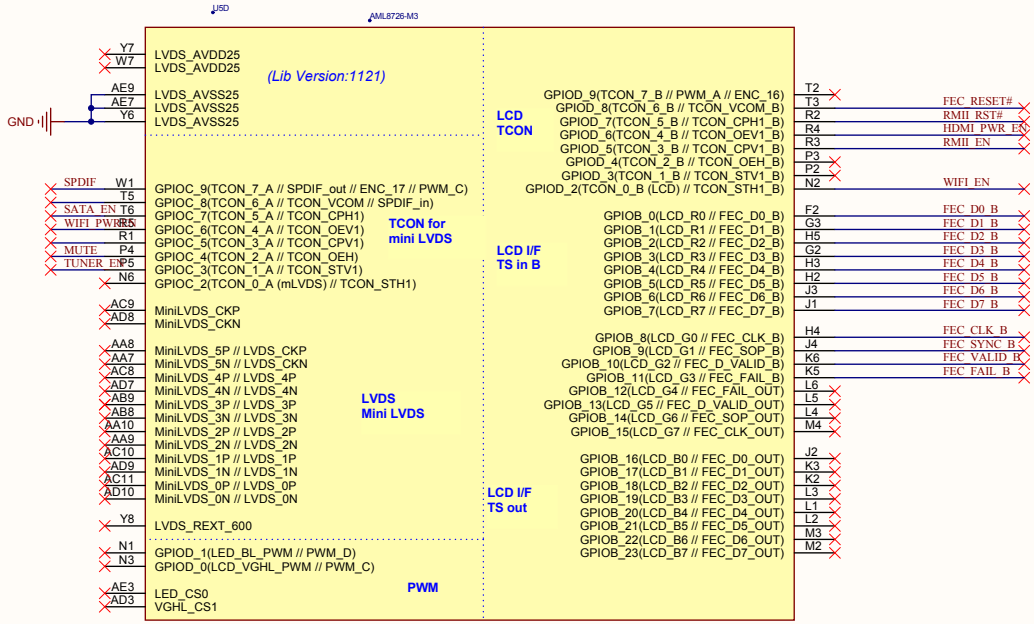
J5D
AML8726-M3
(Lib Version:1121)
LVDS_AVDD25
LVDS_AVDD25
LVDS_AVSS25
LVDS_AVSS25
LVDS_AVSS25
GND
GPIOC_9(TCON_7_A // SPDIF_out // ENC_17 // PWM_C)
GPIOC_8(TCON_6_A // TCON_VCOM // SPDIF_in)
GPIOC_7(TCON_5_A // TCON_CPH1)
GPIOC_6(TCON_4_A // TCON_OEV1)
GPIOC_5(TCON_3_A // TCON_CPV1)
GPIOC_4(TCON_2_A // TCON_OEH)
GPIOC_3(TCON_1_A // TCON_STV1)
GPIOC_2(TCON_0_A (mLVDS) // TCON_STH1)
TCON for mini LVDS
MiniLVDS_CKP
MiniLVDS_CKN
MiniLVDS_5P // LVDS_CKP
MiniLVDS_5N // LVDS_CKN
MiniLVDS_4P // LVDS_4P
MiniLVDS_4N // LVDS_4N
MiniLVDS_3P // LVDS_3P
MiniLVDS_3N // LVDS_3N
MiniLVDS_2P // LVDS_2P
MiniLVDS_2N // LVDS_2N
MiniLVDS_1P // LVDS_1P
MiniLVDS_1N // LVDS_1N
MiniLVDS_0P // LVDS_0P
MiniLVDS_0N // LVDS_0N
LVDS Mini LVDS
LVDS_REXT_600
GPIOD_1(LED_BL_PWM // PWM_D)
GPIOD_0(LCD_VGHL_PWM // PWM_C)
PWM
LED_CS0
VGHL_CS1
LCD TCON
GPIOD_9(TCON_7_B // PWM_A // ENC_16)
GPIOD_8(TCON_6_B // TCON_VCOM_B)
GPIOD_7(TCON_5_B // TCON_CPH1_B)
GPIOD_6(TCON_4_B // TCON_OEV1_B)
GPIOD_5(TCON_3_B // TCON_CPV1_B)
GPIOD_4(TCON_2_B // TCON_OEH_B)
GPIOD_3(TCON_1_B // TCON_STV1_B)
GPIOD_2(TCON_0_B (LCD) // TCON_STH1_B)
LCD I/F TS in B
GPIOB_0(LCD_R0 // FEC_D0_B)
GPIOB_1(LCD_R1 // FEC_D1_B)
GPIOB_2(LCD_R2 // FEC_D2_B)
GPIOB_3(LCD_R3 // FEC_D3_B)
GPIOB_4(LCD_R4 // FEC_D4_B)
GPIOB_5(LCD_R5 // FEC_D5_B)
GPIOB_6(LCD_R6 // FEC_D6_B)
GPIOB_7(LCD_R7 // FEC_D7_B)
GPIOB_8(LCD_G0 // FEC_CLK_B)
GPIOB_9(LCD_G1 // FEC_SOP_B)
GPIOB_10(LCD_G2 // FEC_D_VALID_B)
GPIOB_11(LCD_G3 // FEC_FAIL_B)
GPIOB_12(LCD_G4 // FEC_FAIL_OUT)
GPIOB_13(LCD_G5 // FEC_D_VALID_OUT)
GPIOB_14(LCD_G6 // FEC_SOP_OUT)
GPIOB_15(LCD_G7 // FEC_CLK_OUT)
LCD I/F TS out
GPIOB_16(LCD_B0 // FEC_D0_OUT)
GPIOB_17(LCD_B1 // FEC_D1_OUT)
GPIOB_18(LCD_B2 // FEC_D2_OUT)
GPIOB_19(LCD_B3 // FEC_D3_OUT)
GPIOB_20(LCD_B4 // FEC_D4_OUT)
GPIOB_21(LCD_B5 // FEC_D5_OUT)
GPIOB_22(LCD_B6 // FEC_D6_OUT)
GPIOB_23(LCD_B7 // FEC_D7_OUT)
FEC_RESET#
RMII_RST#
HDMI_PWR_EN
RMII_EN
WIFI_EN
FEC_D0_B
FEC_D1_B
FEC_D2_B
FEC_D3_B
FEC_D4_B
FEC_D5_B
FEC_D6_B
FEC_D7_B
FEC_CLK_B
FEC_SYNC_B
FEC_VALID_B
FEC_FAIL_B
SPDIF
SATA_EN
WIFI_PWR_EN
MUTE
TUNER_EN

Audio

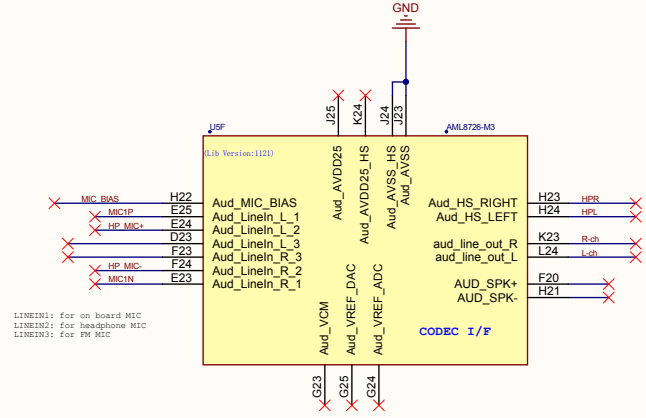
GND
J5F
AML8726-M3
(Lib Version:1121)
Aud_AVDD25
Aud_AVDD25_HS
Aud_AVSS_HS
Aud_AVSS
Aud_MIC_BIAS
Aud_LineIn_L_1
Aud_LineIn_L_2
Aud_LineIn_L_3
Aud_LineIn_R_3
Aud_LineIn_R_2
Aud_LineIn_R_1
Aud_HS_RIGHT
Aud_HS_LEFT
aud_line_out_R
aud_line_out_L
AUD_SPK+
AUD_SPK-
Aud_VCM
Aud_VREF_DAC
Aud_VREF_ADC
CODEC I/F
MIC_BIAS
MIC1P
HP_MIC+
HP_MIC-
MIC1N
HPR
HPL
R-ch
L-ch
LINEIN1: for on board MIC
LINEIN2: for headphone MIC
LINEIN3: for FM MIC

Wi-Fi

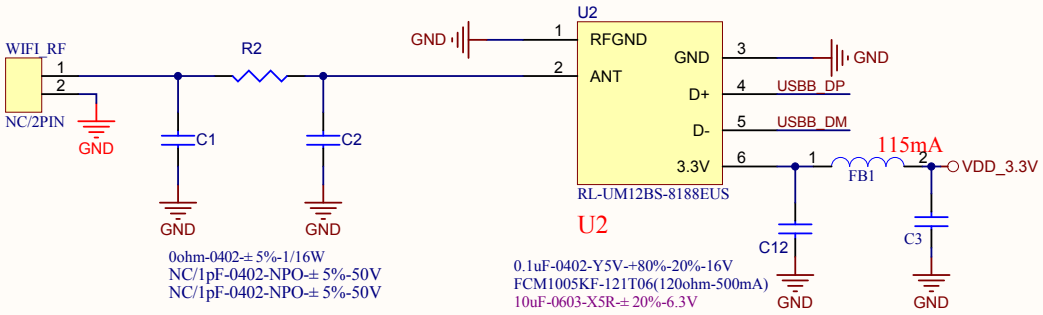
WIFI_RF
1
2
NC/2PIN
GND
R2
C1
C2
GND
GND
0ohm-0402-± 5%-1/16W
NC/1pF-0402-NPO-± 5%-50V
NC/1pF-0402-NPO-± 5%-50V
GND
1
2
U2
RFGND
ANT
GND
D+
D-
3.3V
3
4
5
6
GND
USBB_DP
USBB_DM
RL-UM12BS-8188EUS
U2
0.1uF-0402-Y5V-+80%-20%-16V
FCM1005KF-121T06(120ohm-500mA)
10uF-0603-X5R-± 20%-6.3V
C12
GND
1
2
115mA
FB1
VDD_3.3V
C3
GND

LED

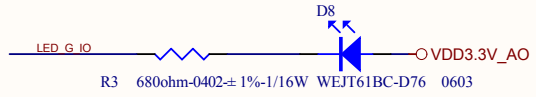
D8
LED_G_IO
VDD3.3V_AO
R3 680ohm-0402-± 1%-1/16W WEJT61BC-D76 0603

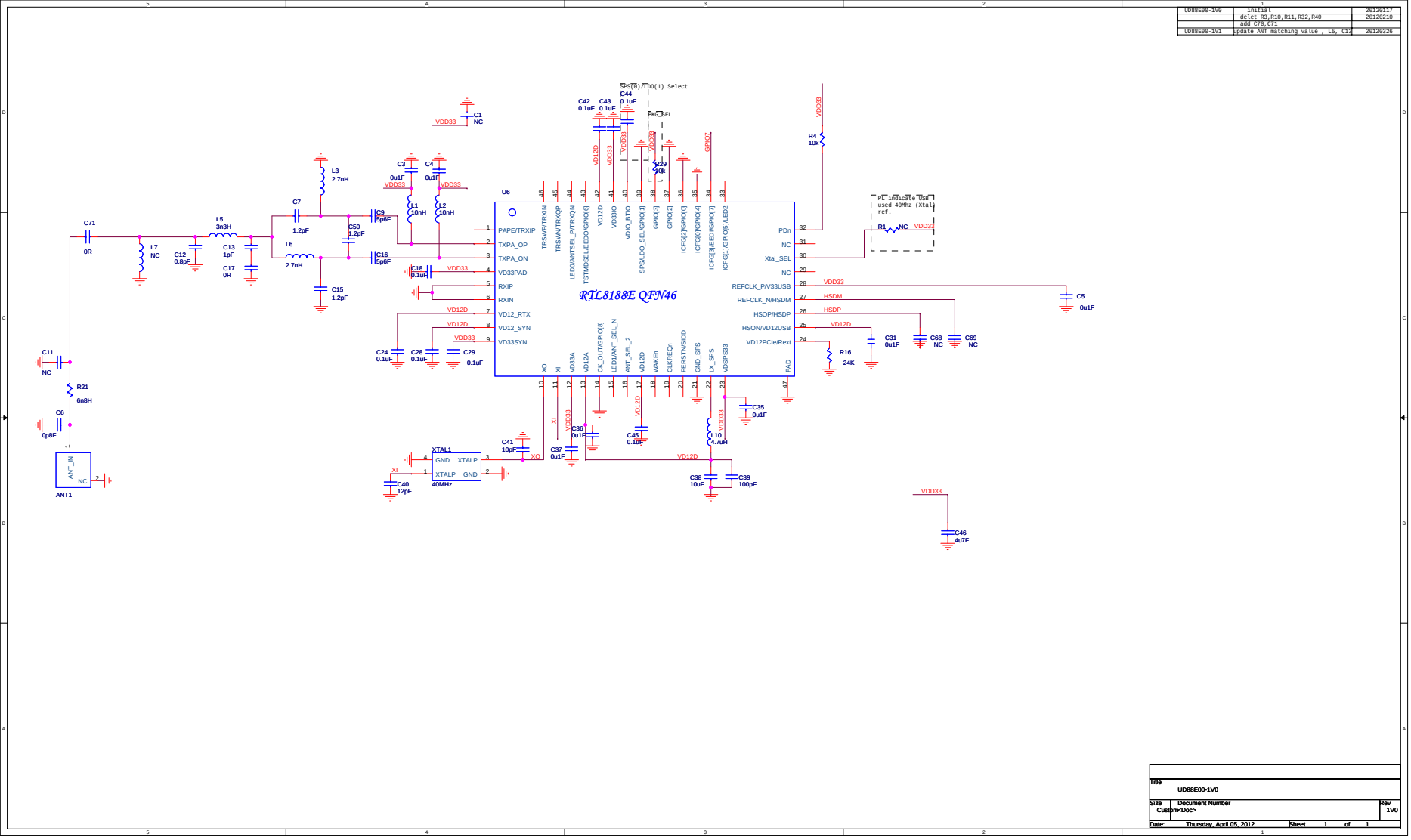

UD88E00-1V0	initial	20120117
	delet R3,R10,R11,R32,R40	20120210
	add C70,C71	
UD88E00-1V1	update ANT matching value , L5, C13	20120326

Title	UD88E00-1V0		
Size	Document Number		Rev
Custom	<Doc>		1V0
Date:	Thursday, April 05, 2012	Sheet 1 of 1	