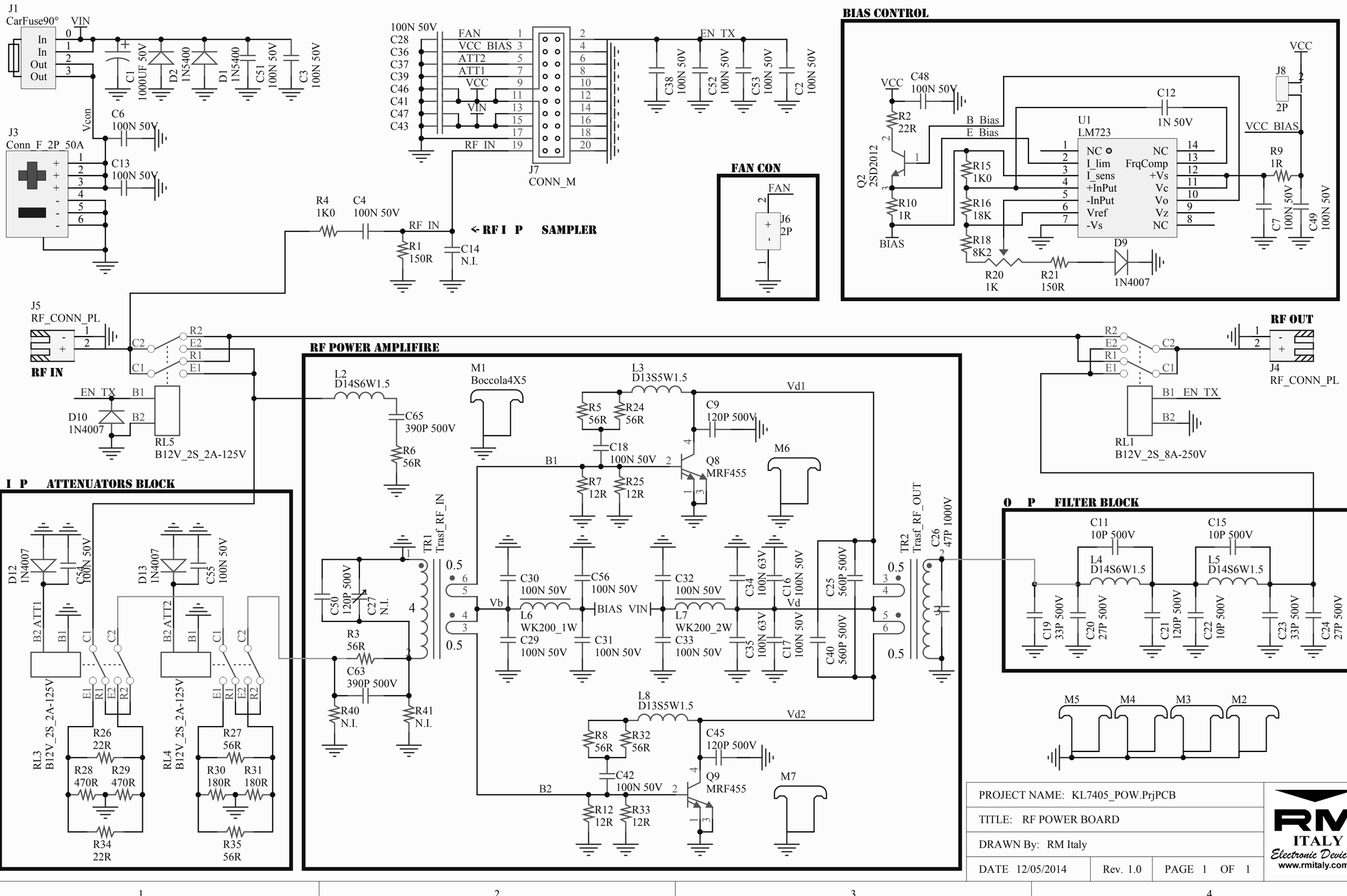

PROJECT NAME: KL7405_POW.PrjPCB	RM ITALY Electronic Devices www.rmitaly.com
TITLE: RF POWER BOARD	
DRAWN By: RM Italy	
DATE 12/05/2014 | Rev. 1.0 | PAGE 1 OF 1	

PART LIST

RM ITALY

KL7405_POW.PrjPCB

Comment	Description	Designator	Quantity
1000UF 50V	Cap Elect P7.5 D16 H25	C1	1
100N 50V	Cap Cer N750 P200	C2, C3, C4, C6, C7, C13, C16, C17, C18, C28, C29, C30, C31, C32, C33, C36, C37, C38, C39, C41, C42, C43, C46, C47, C48, C49, C51, C52, C53, C54, C55, C56	32
120P 500V	Cap Cer NP0 P200	C9, C21, C45, C50	4
10P 500V	Cap Cer NP0 P200	C11, C15, C22	3
1N 50V	Cap Cer N750 P200	C12	1
N.I.	Cap Cer NP0 P200	C14	1
33P 500V	Cap Cer NP0 P200	C19, C23	2
27P 500V	Cap Cer NP0 P200	C20, C24	2
560P 500V	Cap Cer Mica P350	C25, C40	2
47P 1000V	Cap Cer NP0 P200	C26	1
N.I.	Trimmer cilindrico cap 5-50pF	C27	1
100N 63V	Cap Poli R82 P200	C34, C35	2
390P 500V	Cap Cer Mica P250	C63, C65	2
1N5400	General Purpose Diode	D1, D2	2
1N4007	General Purpose Diode	D9, D10, D12, D13	4
CarFuse90°	Lamella Porta Fuse Auto 90°	J1	1
Conn_F_2P_50A	Conn Femmina 2 Poli 50A	J3	1
CONN_M	CONN_M_20P_10X2_Passo 2.54	J7	1
2P	Streep 2 POLI	J8	1
D14S6W1.5	Ind Avv Aria Diam14, Spire6, DiamFilo1.5	L2, L4, L5	3
D13S5W1.5	Ind Avv Aria Diam13, Spire5, DiamFilo1.5	L3, L8	2
WK200_1W	Choke PTH WK200 1 FILO	L6	1
WK200_2W	Choke PTH WK200 2 FILI	L7	1
Boccola4X5	Boccola 4X5 distanziale a saldare in ottone	M1, M2, M3, M4, M5, M6, M7	7
2SD2012	Silicon NPN Triple Diffused Type	Q2	1
MRF455	30MHz NPN Pow Reansistor	Q8, Q9	2
150R	Ser PTH 1/4W	R1, R21	2
22R	Ser PTH 22R 5W MetalOx 5%	R2, R26, R34	3
56R	Ser PTH 56R 5W MetalOx 5%	R3, R5, R6, R8, R24, R27, R32, R35	8
1K0	Ser PTH 1/4W	R4, R15	2
12R	Ser PTH 12R 1/5W MetalOx 5%	R7, R12, R25, R33	4
1R	Ser PTH 1R 1/5W MetalOx 5%	R9, R10	2
18K	Ser PTH 1/4W	R16	1
8K2	Ser PTH 1/4W	R18	1
1K	Multiturn Trimmer	R20	1
470R	Ser PTH 470R 1/5W MetalOx 5%	R28, R29	2
180R	Ser PTH 180R 1/5W MetalOx 5%	R30, R31	2
N.I.	Ser PTH 470R 1/5W MetalOx 5%	R40, R41	2
B12V_2S_8A-250V	Bobina 12V 2 Scambi da 8A 250V	RL1	1
B12V_2S_2A-125V	Bobina 12V 2 Scambi da 2A 125V	RL3, RL4, RL5	3
Trasf_RF_IN	Trasf_RF_OUT Z->1:4 Da Sbilanciato a Bilanciato	TR1	1
Trasf_RF_OUT	Trasf_RF_OUT Z->1:3 Da Bilanciato a Sbilanciato	TR2	1
LM723	High precision voltage regulator	U1	1

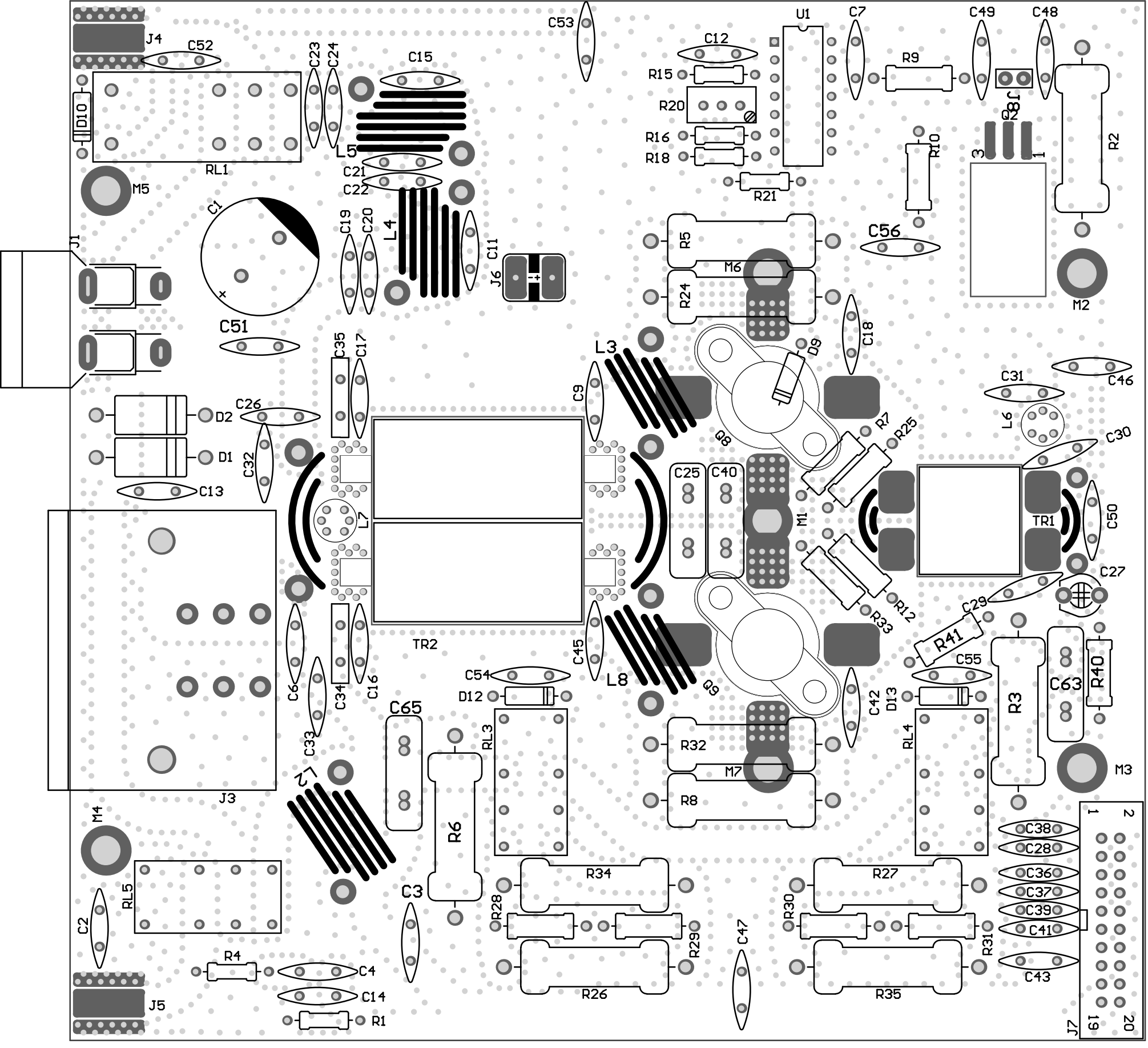
J4
C52
C23
C24
C15
C53
U1
C7
C49
C48
C12
R15
R9
R20
R16
R18
R21
R10
Q2
R2
D10
RL1
L5
C21
C22
M5
C1
C19
C20
L4
C11
J6
R5
M6
R24
C56
M2
J1
C51
C35
C17
L3
D9
C18
C31
C46
C9
D2
C26
R7
R25
L6
C30
Q8
D1
C32
C25
C40
C13
L7
M1
TR1
C50
C27
R12
R33
C29
R41
TR2
C45
C55
C6
C34
C16
C54
L8
Q9
C63
R40
D12
C42
D13
R3
C33
C65
RL3
R32
RL4
M7
M3
J3
L2
R8
M4
R6
C38
C28
C36
C37
C39
C41
C43
RL5
R34
R27
C3
R28
R30
C2
R29
C47
R31
R4
C4
R26
R35
C14
J5
R1
J7
1
2
19
20