FCC Test Report

Report No.: FD180523C10 R1

Test Model: TA-1082

FCC ID: 2AJOTTA-1082

Received Date: May 23, 2018

Test Date: Sep. 19, 2018

Issued Date: Sep. 26, 2018

Applicant: HMD Global Oy

Address: Bertel Jungin aukio 9, 02600 Espoo, Finland

Issued By: Bureau Veritas Consumer Products Services (H.K.) Ltd., Taoyuan Branch

Lab Address: No.19, Hwa Ya 2nd Rd., Wen Hwa Vil., Kwei Shan Dist., Taoyuan City 33383, TAIWAN (R.O.C.)

FCC Registration / Designation Number: 328930 / TW1050

Certificate #4327.01

Testing Laboratory 2021

This report is for your exclusive use. Any copying or replication of this report to or for any other person or entity, or use of our name or trademark, is permitted only with our prior written permission. This report sets forth our findings solely with respect to the test samples identified herein. The results set forth in this report are not indicative or representative of the quality or characteristics of the lot from which a test sample was taken or any similar or identical product unless specifically and expressly noted. Our report includes all of the tests requested by you and the results thereof based upon the information that you provided to us. You have 60 days from date of issuance of this report to notify us of any material error or omission caused by our negligence, provided, however, that such notice shall be in writing and shall specifically address the issue you wish to raise. A failure to raise such issue within the prescribed time shall constitute your unqualified acceptance of the completeness of this report, the tests conducted and the correctness of the report contents. Unless specific mention, the uncertainty of measurement has been explicitly taken into account to declare the compliance or non-compliance to the specification.
The report must not be used by the client to claim product certification, approval, or endorsement by A2LA, or any agency of the U.S. government.
The report must not be used by the client to claim product certification, approval, or endorsement by TAF or any government agencies.

Table of Contents

Release Control Record **3**

1 Certificate of Conformity **4**

2 Summary of Test Results **5**

2.1 Measurement Uncertainty 5
2.2 Modification Record 5

3 General Information **6**

3.1 Features of EUT 6
3.2 General Description of EUT 6
3.3 Operating Modes of EUT and Determination of Worst Case Operating Mode 6
3.4 Test Program Used and Operation Descriptions 6
3.5 Primary Clock Frequencies of Internal Source 6

4 Configuration and Connections with EUT **7**

4.1 Connection Diagram of EUT and Peripheral Devices 7
4.2 Configuration of Peripheral Devices and Cable Connections 7

5 Radiated Emissions up to 1 GHz **8**

5.1 Limits 8
5.2 Test Instruments 9
5.3 Test Arrangement 10
5.4 Test Results 11

6 Radiated Emissions above 1 GHz **13**

6.1 Limits 13
6.2 Test Instruments 14
6.3 Test Arrangement 15
6.4 Test Results 16

7 Pictures of Test Arrangements **20**

Appendix – Information on the Testing Laboratories **21**

Annex A – Test Report for TA-1087 (Dual SIM) **22**

Release Control Record

Issue No.	Description	Date Issued
FD180523C10	Original Release	Jul. 04, 2018
FD180523C10 R1	Change EUT from DVT to PVT, LTE Band 41 frequency range, applicant's address, and add new earphone.	Sep. 26, 2018

1 Certificate of Conformity

Product:	Smart Phone
Brand:	NOKIA
Test Model:	TA-1082
Sample Status:	Production Unit
Applicant:	HMD Global Oy
Test Date:	Sep. 19, 2018
Standards:	47 CFR FCC Part 15, Subpart B, Class B ICES-003:2016 Issue 6, Class B ANSI C63.4:2014

The above equipment has been tested by **Bureau Veritas Consumer Products Services (H.K.) Ltd., Taoyuan Branch**, and found compliance with the requirement of the above standards. The test record, data evaluation & Equipment Under Test (EUT) configurations represented herein are true and accurate accounts of the measurements of the sample's EMC characteristics under the conditions specified in this report.

Prepared by : _____ , **Date:** Sep. 26, 2018

Ivonne Wu / Supervisor

Approved by : _____ , **Date:** Sep. 26, 2018

Carl Chen / Project Engineer

2 Summary of Test Results

47 CFR FCC Part 15, Subpart B / ICES-003:2016 Issue 6, Class B
ANSI C63.4:2014

FCC Clause	ICES-003 Clause	Test Item	Result/Remarks	Verdict
15.107	6.1	AC Power Line Conducted Emissions	Refer to Note as below	N/A
15.109	6.2.1	Radiated Emissions up to 1 GHz	Minimum passing Class B margin is -3.46 dB at 159.05 MHz	Pass
	6.2.2	Radiated Emissions above 1 GHz	Minimum passing Class B margin is -21.85 dB at 19336.12 MHz	Pass

Note:

1. Only radiated emission test was performed for this addendum. Refer to BV CPS report no.: FD180523C09 R1 for other test data.
2. There is no deviation to the applied test methods and requirements covered by the scope of this report.

2.1 Measurement Uncertainty

Where relevant, the following measurement uncertainty levels have been estimated for tests performed on the EUT:
The listed uncertainties are the worst case uncertainty for the entire range of measurement. Please note that the uncertainty values are provided for informational purposes only and are not used in determining the PASS/FAIL results.

Measurement	Frequency	Expanded Uncertainty (k=2) (±)
Radiated Emissions up to 1 GHz	30 MHz ~ 1 GHz	4.70 dB
Radiated Emissions above 1 GHz	Above 1 GHz	2.26 dB

2.2 Modification Record

There were no modifications required for compliance.

3 General Information

3.1 Features of EUT

The tests reported herein were performed according to the method specified by HMD Global Oy, for detailed feature description, please refer to the manufacturer's specifications or user's manual.

3.2 General Description of EUT

Product	Smart Phone
Brand	NOKIA
Test Model	TA-1082
Status of EUT	Production Unit
Operating Software	Android 8.1.0
Power Supply Rating	5.0 Vdc or 9 Vdc or 12 Vdc (adapter) 5.0 Vdc (host equipment) 3.85 Vdc (Li-ion battery)
Accessory Device	Refer to Note as below
Data Cable Supplied	Refer to Note as below

Note:

1. This report is issued as a supplementary to BV CPS report no.: FD180523C09 R1. The difference is listed as below. Only radiated emissions test was verified for this report.

Report No.	FCC ID	Model	Difference
FD180523C09 R1	2AJOTTA-1087	TA-1087	Dual SIM
FD180523C10 R1	2AJOTTA-1082	TA-1082	Single SIM
* The models have the same layout, circuit, and components, but different SIM tray.			

2. The EUT accessories list refers to EUT Photo.pdf.

3.3 Operating Modes of EUT and Determination of Worst Case Operating Mode

Test modes are presented in the report as below.

Mode	Test Condition
	Radiated Emission
-	GSM 850 Link + BT Link + WLAN (2.4G) Link + GPS & GLONASS Rx + USB Cable + Adapter 1 + SIM 1

3.4 Test Program Used and Operation Descriptions

a. The EUT linked with Bluetooth earphone.
b. The NFC function was turned on.
c. The EUT communicated data with the Radio Communication Analyzer, GPS simulator, and Wireless AP, which acted as communication partners.

3.5 Primary Clock Frequencies of Internal Source

The highest frequency generated or used within the EUT or on which the EUT operates or tunes is 5000 MHz, provided by HMD Global Oy, for detailed internal source, please refer to the manufacturer's specifications.

4 Configuration and Connections with EUT

4.1 Connection Diagram of EUT and Peripheral Devices

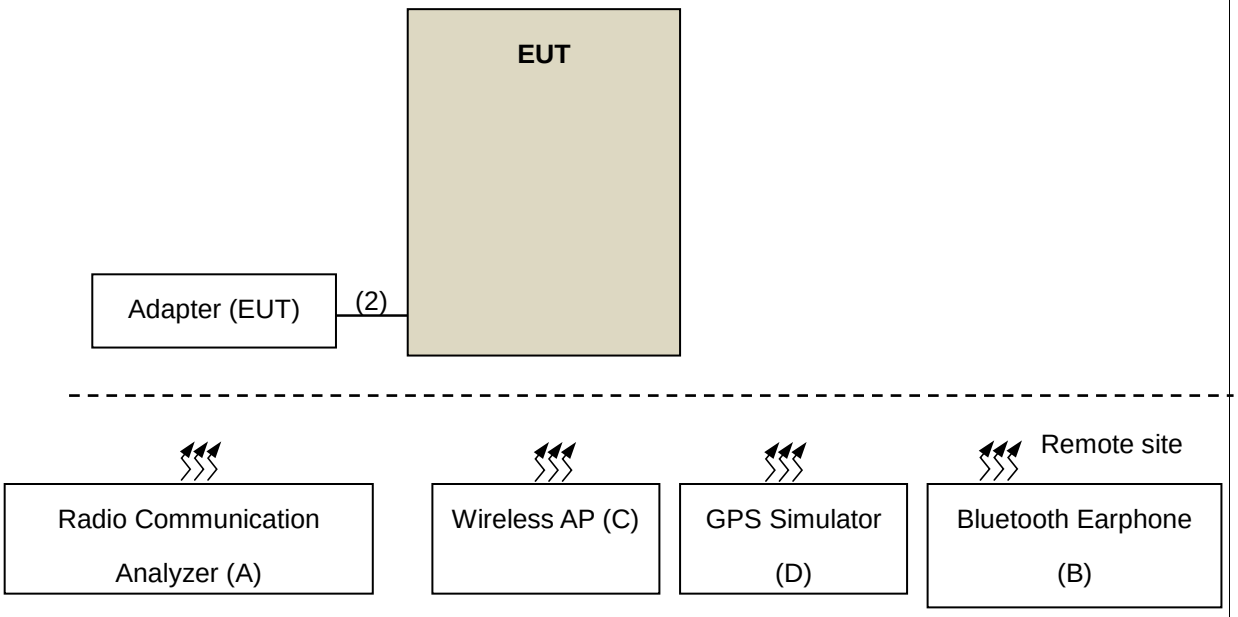

4.2 Configuration of Peripheral Devices and Cable Connections

ID	Product	Brand	Model No.	Serial No.	FCC ID	Remarks
A.	Radio Communication Analyzer	Anritsu	MT8820C	6201240432	N/A	--
B.	BLUETOOTH EARPHONE	ELECOM	LBT-MPHS400	N/A	N/A	--
C.	Wireless AP	D-LINK	DIR826L	QBQ91C9000416	N/A	--
D.	GPS simulator	PENDULUM	GSG-54	191121	N/A	--

Note:

1. All power cords of the above support units are non-shielded (1.8m).
2. Items A~D acted as communication partners to transfer data.

ID	Descriptions	Qty.	Length (m)	Shielding (Yes/No)	Cores (Qty.)	Remarks
1.	USB Cable	1	0.95	Y	0	Accessory of the EUT

Note: The core(s) is(are) originally attached to the cable(s).

5 Radiated Emissions up to 1 GHz

5.1 Limits

Emissions radiated outside of the specified bands, shall be according to the general radiated limits as following:

Radiated Emissions Limits at 10 meters (dBµV/m)				
Frequencies (MHz)	FCC 15B / ICES-003, Class A	FCC 15B / ICES-003, Class B	CISPR 22, Class A	CISPR 22, Class B
30-88	39	29.5	40	30
88-216	43.5	33.1		
216-230	46.4	35.6		
230-960			47	37
960-1000	49.5	43.5		

Radiated Emissions Limits at 3 meters (dBµV/m)				
Frequencies (MHz)	FCC 15B / ICES-003, Class A	FCC 15B / ICES-003, Class B	CISPR 22, Class A	CISPR 22, Class B
30-88	49.5	40	50.5	40.5
88-216	54	43.5		
216-230	56.9	46		
230-960			57.5	47.5
960-1000	60	54		

Notes:

1. The lower limit shall apply at the transition frequencies.
2. Emission level (dBuV/m) = 20 log Emission level (uV/m).
3. QP detector shall be applied if not specified.

5.2 Test Instruments

Description & Manufacturer	Model No.	Serial No.	Cal. Date	Cal. Due
Test Receiver ROHDE & SCHWARZ (V)	ESR	101240	Oct. 24, 2017	Oct. 23, 2018
Test Receiver ROHDE & SCHWARZ (H)	ESR	101264	Dec. 25, 2017	Dec. 24, 2018
BILOG Antenna SCHWARZBECK (V)	VULB9168	9168-160	Nov. 29, 2017	Nov. 28, 2018
BILOG Antenna SCHWARZBECK (H)	VULB9168	9168-156	Nov. 29, 2017	Nov. 28, 2018
Preamplifier Sonoma (V)	310N	352924	Jul. 12, 2018	Jul. 11, 2019
Preamplifier Sonoma (H)	310N	352923	Jul. 12, 2018	Jul. 11, 2019
RF signal cable (with 5dB PAD) Times (V)	LMR-600 (18M) +LMR-400 (7M)	CABLE-CH1 (VER) -01	Oct. 24, 2017	Oct. 23, 2018
RF signal cable (with 5dB PAD) Times (H)	LMR-600 (11.8M) +LMR-400 (7M)	CABLE-CH1 (HOR) -01	Oct. 24, 2017	Oct. 23, 2018
Software BV ADT	BV ADT_Radiated_ V8.7.08	NA	NA	NA
Antenna Tower (V)	MFA-440	9707	NA	NA
Antenna Tower (H)	MFA-440	970705	NA	NA
Turn Table	DS430	50303	NA	NA
Controller (V)	MF7802	074	NA	NA
Controller (H)	MF7802	08093	NA	NA

NOTE:
1. The calibration interval of the above test instruments is 12 months and the calibrations are traceable to NML/ROC and NIST/USA.
2. The test was performed in HwaYa Chamber 1.
3. The IC Site Registration No. is IC 7450F-1.
4. The VCCI Site Registration No. is R-1893.

5.3 Test Arrangement

a. The EUT was placed on the top of a rotating table 0.8 meters above the ground at an accredited test facility. The table was rotated 360 degrees to determine the position of the highest radiation.
b. The EUT was set 10 meters away from the interference-receiving antenna, which was mounted on the top of a variable-height antenna tower.
c. The antenna is a broadband antenna, and its height is varied from one meter to four meters above the ground to determine the maximum value of the field strength. Both horizontal and vertical polarizations of the antenna are set to make the measurement.
d. For each suspected emission, the EUT was arranged to its worst case and then the antenna was tuned to heights from 1 meter to 4 meters and the rotatable table was turned from 0 degrees to 360 degrees to find the maximum reading.
e. The test-receiver system was set to quasi-peak detect function and specified bandwidth with maximum hold mode when the test frequency is below 1 GHz.

Note: The resolution bandwidth and video bandwidth of test receiver/spectrum analyzer is 120 kHz for quasi-peak detection (QP) at frequency below 1 GHz.

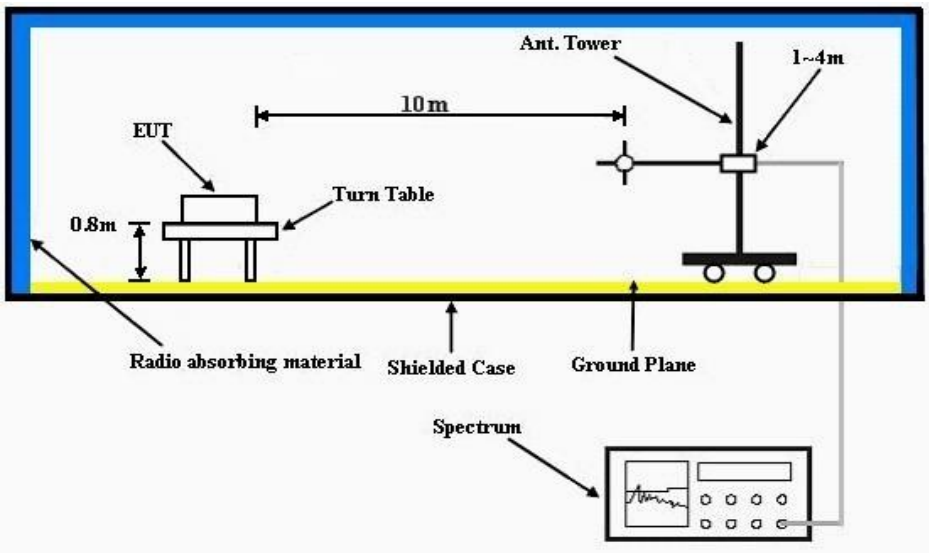

5.4 Test Results

Frequency Range	30MHz ~ 1GHz	Detector Function & Resolution Bandwidth	Quasi-Peak (QP), 120kHz
Input Power	120Vac, 60Hz	Environmental Conditions	25℃, 65%RH
Tested by	James Chang	Test Date	2018/9/19

Antenna Polarity & Test Distance : Horizontal at 10 m								
No	Frequency (MHz)	Emission Level (dBuV/m)	Limit (dBuV/m)	Margin (dB)	Antenna Height (m)	Table Angle (Degree)	Raw Value (dBuV)	Correction Factor (dB/m)
1	80.68	19.55 QP	30.00	-10.45	2.00 H	271	36.81	-17.26
2	159.05	18.91 QP	30.00	-11.09	4.00 H	256	31.85	-12.94
3	486.62	27.54 QP	37.00	-9.46	1.00 H	48	34.56	-7.02
4	722.85	27.16 QP	37.00	-9.84	1.00 H	276	29.40	-2.24
5	868.95	27.70 QP	37.00	-9.30	3.50 H	200	28.07	-0.37
6	954.58	29.54 QP	37.00	-7.46	3.50 H	202	28.77	0.77

Remarks:

1. Emission Level(dBuV/m) = Raw Value(dBuV) + Correction Factor(dB/m)
2. Correction Factor(dB/m) = Antenna Factor (dB/m) + Cable Factor (dB) – Pre-Amplifier Factor (dB)
3. The other emission levels were very low against the limit.
4. Margin value = Emission level – Limit value

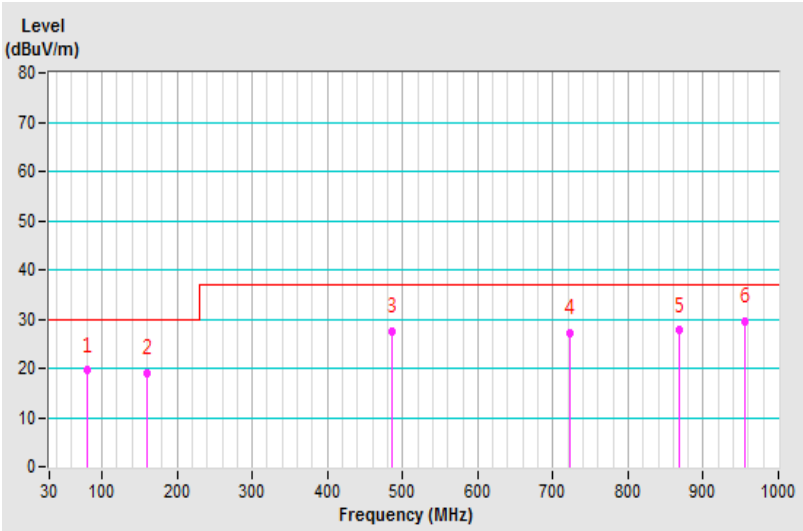

Frequency Range	30MHz ~ 1GHz	Detector Function & Resolution Bandwidth	Quasi-Peak (QP), 120kHz
Input Power	120Vac, 60Hz	Environmental Conditions	25℃, 65%RH
Tested by	James Chang	Test Date	2018/9/19
Test Mode	Mode 1		

Antenna Polarity & Test Distance : Vertical at 10 m								
No	Frequency (MHz)	Emission Level (dBuV/m)	Limit (dBuV/m)	Margin (dB)	Antenna Height (m)	Table Angle (Degree)	Raw Value (dBuV)	Correction Factor (dB/m)
1	48.32	25.04 QP	30.00	-4.96	1.00 V	124	38.72	-13.68
2	80.26	25.18 QP	30.00	-4.82	1.50 V	316	42.43	-17.25
3	91.10	25.60 QP	30.00	-4.40	1.50 V	158	43.93	-18.33
4	**159.05**	**26.54 QP**	**30.00**	**-3.46**	**1.00 V**	**253**	**39.47**	**-12.93**
5	179.70	21.73 QP	30.00	-8.27	1.00 V	326	35.60	-13.87
6	920.55	29.26 QP	37.00	-7.74	4.00 V	343	27.68	1.58

Remarks:

1. Emission Level(dBuV/m) = Raw Value(dBuV) + Correction Factor(dB/m)
2. Correction Factor(dB/m) = Antenna Factor (dB/m) + Cable Factor (dB) – Pre-Amplifier Factor (dB)
3. The other emission levels were very low against the limit.
4. Margin value = Emission level – Limit value

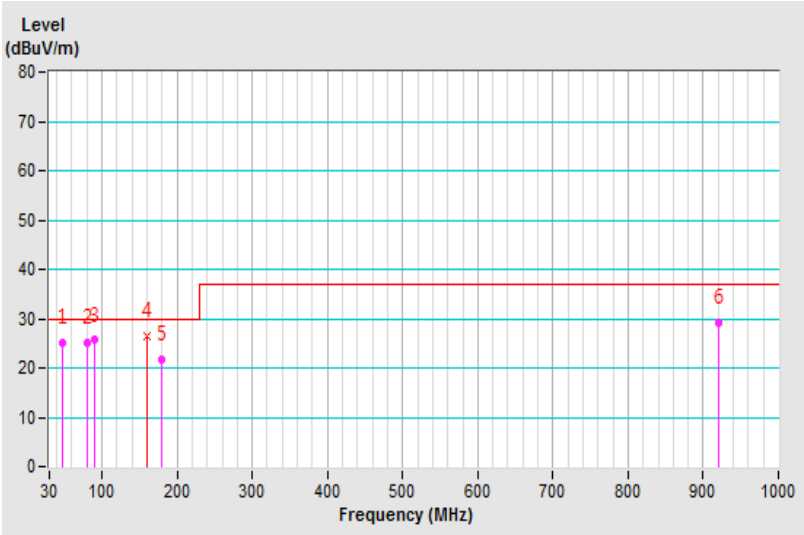

6 Radiated Emissions above 1 GHz

6.1 Limits

Emissions radiated outside of the specified bands, shall be according to the general radiated limits as following:

Radiated Emissions Limits at 10 meters (dBµV/m)				
Frequencies (MHz)	FCC 15B / ICES-003, Class A	FCC 15B / ICES-003, Class B	CISPR 22, Class A	CISPR 22, Class B
1000-3000	Avg: 49.5 Peak: 69.5	Avg: 43.5 Peak: 63.5	Not defined	Not defined
Above 3000			Not defined	Not defined

Radiated Emissions Limits at 3 meters (dBµV/m)				
Frequencies (MHz)	FCC 15B / ICES-003, Class A	FCC 15B / ICES-003, Class B	CISPR 22, Class A	CISPR 22, Class B
1000-3000	Avg: 60 Peak: 80	Avg: 54 Peak: 74	Avg: 56 Peak: 76	Avg: 50 Peak: 70
Above 3000			Avg: 60 Peak: 80	Avg: 54 Peak: 74

Notes:

1. The lower limit shall apply at the transition frequencies.
2. Emission level (dBuV/m) = 20 log Emission level (uV/m).
3. As shown in 15.35(b), for frequencies above 1000 MHz, the field strength limits are based on average detector, however, the peak field strength of any emission shall not exceed the maximum permitted average limits, specified above by more than 20 dB under any condition of modulation.

Radiated Emissions Limits at 1.5 meters (dBµV/m)		
Frequencies (MHz)	FCC 15B / ICES-003, Class A	FCC 15B / ICES-003, Class B
Above 18000	Avg: 66 Peak: 86	Avg: 60 Peak: 80

Note: Limit@1.5m = Limit@3m + 20log(3/1.5)

Frequency Range (For unintentional radiators)

Highest frequency generated or used in the device or on which the device operates or tunes (MHz)	Upper frequency of measurement range (MHz)
Below 1.705	30
1.705-108	1000
108-500	2000
500-1000	5000
Above 1000	5th harmonic of the highest frequency or 40 GHz, whichever is lower

6.2 Test Instruments

Description & Manufacturer	Model No.	Serial No.	Cal. Date	Cal. Due
Test Receiver ROHDE & SCHWARZ (Above 1GHz)	ESR7	101471	Mar. 01, 2018	Feb. 28, 2019
Spectrum Analyzer Agilent	E4446A	MY51100039	Sep. 10, 2018	Sep. 09, 2019
BILOG Antenna SCHWARZBECK	VULB9168	9168-157	Nov. 29, 2017	Nov. 28, 2018
RF signal cable (with 5dB PAD) Times	LMR-400 (18M)	CABLE-CH2-01	Apr. 27, 2018	Apr. 26, 2019
HORN Antenna (with 4dB PAD) SCHWARZBECK	BBHA 9120 D	9120D-405	Dec. 01, 2017	Nov. 30, 2018
Pre-Ammlifier Agilent (Above 1GHz)	8449B	3008A01961	Oct. 16, 2017	Oct. 15, 2018
Software BV ADT	BV ADT_Radiated_ V8.7.08	NA	NA	NA
Antenna Tower BV ADT	AT100	AT93021702	NA	NA
Turn Table BV ADT	TT100	TT93021702	NA	NA
Controller BV ADT	SC100	SC93021702	NA	NA
RF Coaxial Cable EMCI	EMC102-KM-KM-1 000	170820	Aug. 28, 2018	Aug. 27, 2019
RF Coaxial Cable EMCI	EMC102-KM-KM-3 000	150929	Aug. 28, 2018	Aug. 27, 2019
RF Coaxial Cable JUNFLON+EMC	JUNFLON+EMC10 4-SM-SM-6000	Cable-CH2-02(MWX3221308 G003+130710)	Jun. 11, 2018	Jun. 10, 2019
Fix tool for Boresight antenna	BAF-01	2	NA	NA
Pre-amplifier (18GHz-40GHz) EMC	EMC184045B	980175	Nov. 14, 2017	Nov. 13, 2018
HORN Antenna (with 3dB PAD) SCHWARZBECK	BBHA 9170	148	Dec. 13, 2017	Dec. 12, 2018

Note:
1. The calibration interval of the above test instruments is 12 months and the calibrations are traceable to NML/ROC and NIST/USA.
2. The test was performed in HwaYa Chamber 2.
3. The horn antenna and HP preamplifier (model: 8449B) are used only for the measurement of emission frequency above 1GHz if tested.
4. The IC Site Registration No. is IC 7450F-2.
5. The VCCI Site Registration No. is G-10018.

6.3 Test Arrangement

a. The EUT was placed on the top of a rotating table 0.8 meters above the ground at an accredited chamber room. The table was rotated 360 degrees to determine the position of the highest radiation.
b. For frequency range 1 GHz ~ 18 GHz, the EUT was set 3 meters away from the interference-receiving antenna, which was mounted on the top of a variable-height antenna tower.
c. For frequency range 18 GHz ~ 40 GHz, the EUT was set 1.5 meters away from the interference-receiving antenna, which was mounted on the top of a variable-height antenna tower.
d. The height of antenna can be varied from one meter to four meters, the height of adjustment depends on the EUT height and the antenna 3 dB beamwidth both, to detect the maximum value of the field strength. Both horizontal and vertical polarizations of the antenna are set to make the measurement.
e. For each suspected emission, the EUT was arranged to its worst case and then the antenna was tuned to heights and the rotatable table was turned from 0 degrees to 360 degrees to find the maximum reading.
f. The spectrum analyzer system was set to peak and average detect function and specified bandwidth with maximum hold mode when the test frequency is above 1 GHz.

Note: The resolution bandwidth of test receiver/spectrum analyzer is 1 MHz and video bandwidth is 3 MHz for Peak detection (PK) at frequency above 1 GHz. The resolution bandwidth of test receiver/spectrum analyzer is 1 MHz for Average detection (AV) at frequency above 1 GHz.

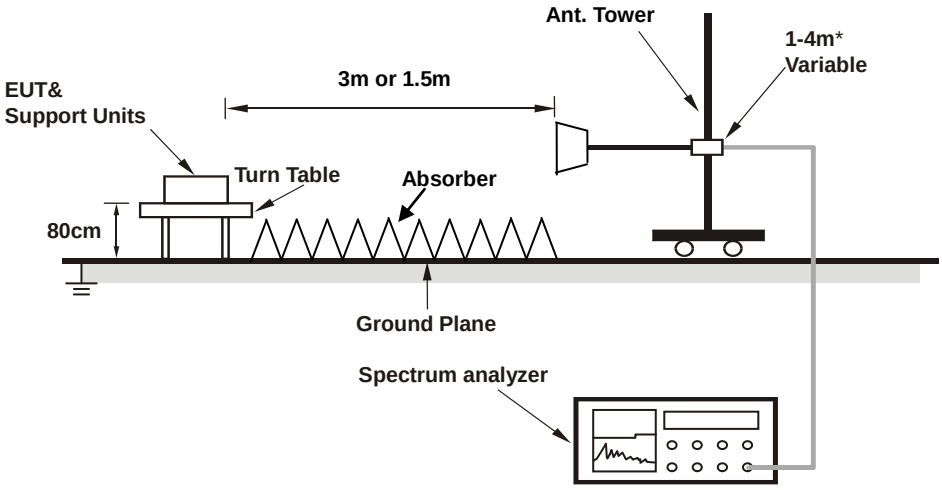

6.4 Test Results

Frequency Range	1GHz ~ 18GHz	Detector Function & Resolution Bandwidth	Peak (PK) / Average (AV), 1MHz
Input Power	120Vac, 60Hz	Environmental Conditions	22℃, 63%RH
Tested by	Rolan Zheng	Test Date	2018/9/19

Antenna Polarity & Test Distance : Horizontal at 3 m								
No	Frequency (MHz)	Emission Level (dBuV/m)	Limit (dBuV/m)	Margin (dB)	Antenna Height (m)	Table Angle (Degree)	Raw Value (dBuV)	Correction Factor (dB/m)
1	1368.35	41.34 PK	74.00	-32.66	1.00 H	16	43.30	-1.96
2	1368.35	27.24 AV	54.00	-26.76	1.00 H	16	29.20	-1.96
3	2343.82	46.87 PK	74.00	-27.13	1.69 H	122	44.78	2.09
4	2343.82	31.32 AV	54.00	-22.68	1.69 H	122	29.23	2.09
5	2978.90	45.47 PK	74.00	-28.53	1.26 H	61	41.85	3.62
6	2978.90	29.11 AV	54.00	-24.89	1.26 H	61	25.49	3.62

Remarks:

1. Emission Level(dBuV/m) = Raw Value(dBuV) + Correction Factor(dB/m)
2. Correction Factor(dB/m) = Antenna Factor (dB/m) + Cable Factor (dB) – Pre-Amplifier Factor (dB)
3. The other emission levels were very low against the limit.
4. Margin value = Emission level – Limit value

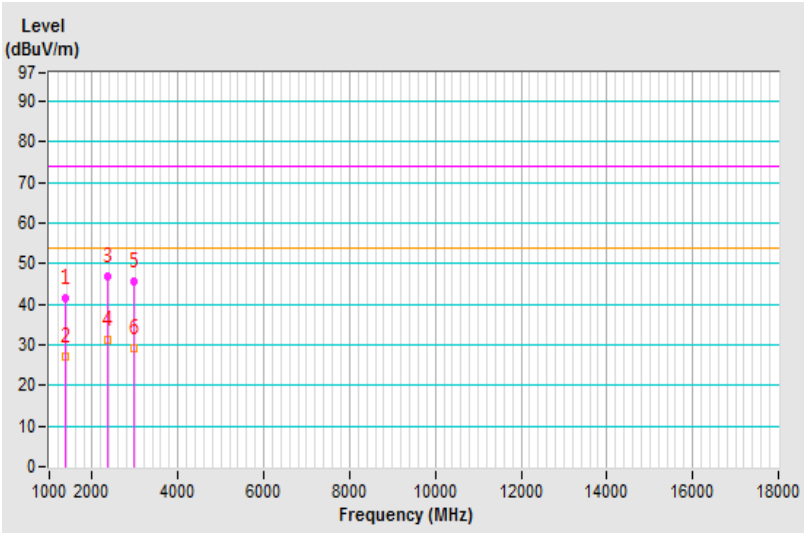

Frequency Range	1GHz ~ 18GHz	Detector Function & Resolution Bandwidth	Peak (PK) / Average (AV), 1MHz
Input Power	120Vac, 60Hz	Environmental Conditions	22℃, 63%RH
Tested by	Rolan Zheng	Test Date	2018/9/19

Antenna Polarity & Test Distance : Vertical at 3 m								
No	Frequency (MHz)	Emission Level (dBuV/m)	Limit (dBuV/m)	Margin (dB)	Antenna Height (m)	Table Angle (Degree)	Raw Value (dBuV)	Correction Factor (dB/m)
1	1640.27	42.89 PK	74.00	-31.11	1.05 V	23	44.80	-1.91
2	1640.27	28.66 AV	54.00	-25.34	1.05 V	23	30.57	-1.91
3	2316.54	44.48 PK	74.00	-29.52	1.00 V	360	42.44	2.04
4	2316.54	30.47 AV	54.00	-23.53	1.00 V	360	28.43	2.04
5	3458.33	43.77 PK	74.00	-30.23	1.36 V	312	39.62	4.15
6	3458.33	31.24 AV	54.00	-22.76	1.36 V	312	27.09	4.15

Remarks:

1. Emission Level(dBuV/m) = Raw Value(dBuV) + Correction Factor(dB/m)
2. Correction Factor(dB/m) = Antenna Factor (dB/m) + Cable Factor (dB) – Pre-Amplifier Factor (dB)
3. The other emission levels were very low against the limit.
4. Margin value = Emission level – Limit value

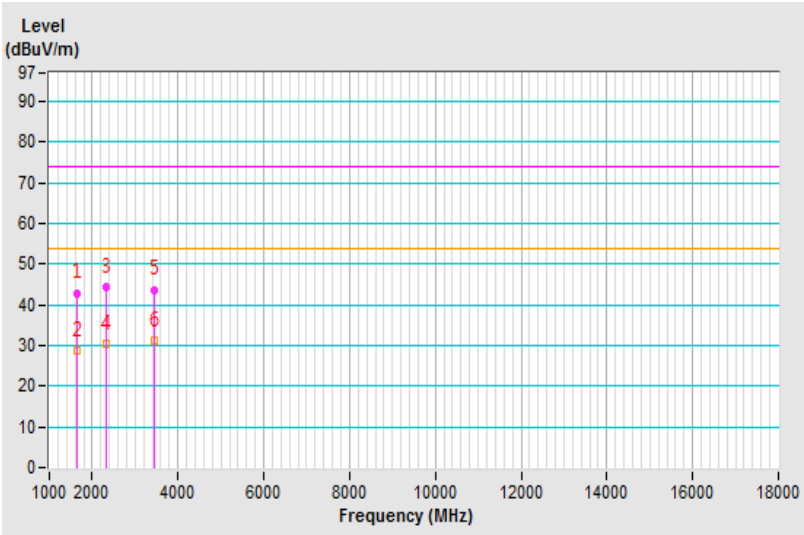

Frequency Range	18GHz ~ 40GHz	Detector Function & Resolution Bandwidth	Peak (PK) / Average (AV), 1MHz
Input Power	120Vac, 60Hz	Environmental Conditions	22℃, 63%RH
Tested by	Rolan Zheng	Test Date	2018/9/19
Test Mode	Mode 1		

Antenna Polarity & Test Distance : Horizontal at 1.5 m								
No	Frequency (MHz)	Emission Level (dBuV/m)	Limit (dBuV/m)	Margin (dB)	Antenna Height (m)	Table Angle (Degree)	Raw Value (dBuV)	Correction Factor (dB/m)
1	19336.12	57.32 PK	80.00	-22.68	1.47 H	133	60.29	-2.97
2	**19336.12**	**38.15 AV**	**60.00**	**-21.85**	**1.47 H**	**133**	**41.12**	**-2.97**

Remarks:

1. Emission Level(dBuV/m) = Raw Value(dBuV) + Correction Factor(dB/m)
2. Correction Factor(dB/m) = Antenna Factor (dB/m) + Cable Factor (dB) – Pre-Amplifier Factor (dB)
3. The other emission levels were very low against the limit.
4. Margin value = Emission level – Limit value

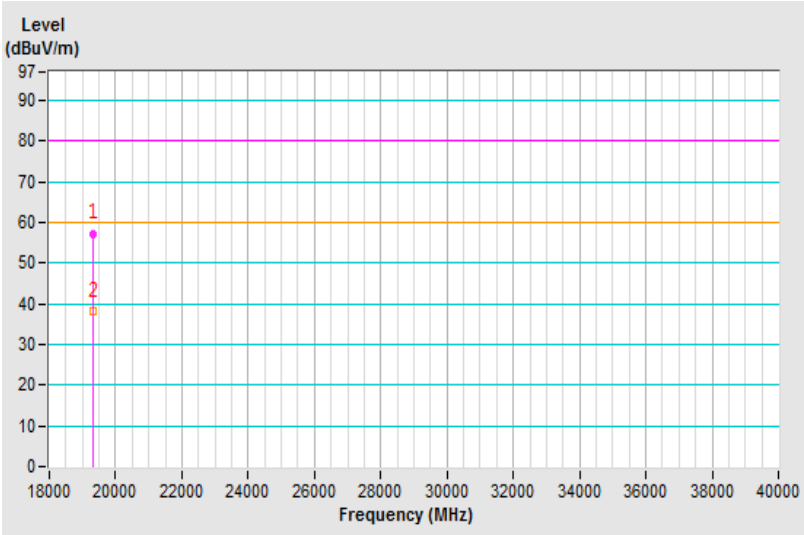

Frequency Range	18GHz ~ 40GHz	Detector Function & Resolution Bandwidth	Peak (PK) / Average (AV), 1MHz
Input Power	120Vac, 60Hz	Environmental Conditions	22℃, 63%RH
Tested by	Rolan Zheng	Test Date	2018/9/19
Test Mode	Mode 1		

Antenna Polarity & Test Distance : Vertical at 1.5 m								
No	Frequency (MHz)	Emission Level (dBuV/m)	Limit (dBuV/m)	Margin (dB)	Antenna Height (m)	Table Angle (Degree)	Raw Value (dBuV)	Correction Factor (dB/m)
1	18963.14	56.12 PK	80.00	-23.88	1.26 V	255	58.49	-2.37
2	18963.14	36.59 AV	60.00	-23.41	1.26 V	255	38.96	-2.37

Remarks:

1. Emission Level(dBuV/m) = Raw Value(dBuV) + Correction Factor(dB/m)
2. Correction Factor(dB/m) = Antenna Factor (dB/m) + Cable Factor (dB) – Pre-Amplifier Factor (dB)
3. The other emission levels were very low against the limit.
4. Margin value = Emission level – Limit value

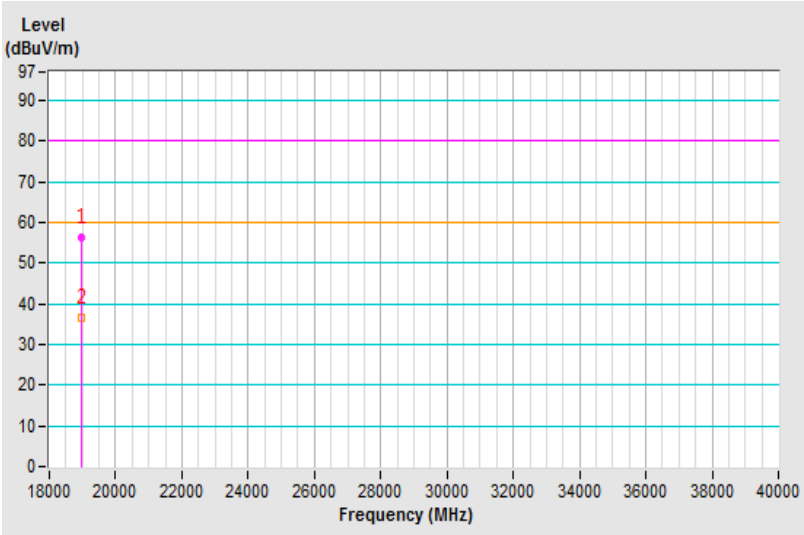

7 Pictures of Test Arrangements

Refer to Test Setup Photographs

Appendix – Information on the Testing Laboratories

We, Bureau Veritas Consumer Products Services (H.K.) Ltd., Taoyuan Branch, were founded in 1988 to provide our best service in EMC, Radio, Telecom and Safety consultation. Our laboratories are FCC recognized accredited test firms and accredited according to ISO/IEC 17025.

If you have any comments, please feel free to contact us at the following:

Linko EMC/RF Lab
Tel: 886-2-26052180
Fax: 886-2-26051924

Hsin Chu EMC/RF/Telecom Lab
Tel: 886-3-6668565
Fax: 886-3-6668323

Hwa Ya EMC/RF/Safety Lab
Tel: 886-3-3183232
Fax: 886-3-3270892

Email: service.adt@tw.bureauveritas.com
Web Site: www.bureauveritas-adt.com

The address and road map of all our labs can be found in our web site also.

--- END ---

Annex A – Test Report for TA-1087 (Dual SIM)

FCC Test Report

Report No.: FD180523C09 R1

Test Model: TA-1087

FCC ID: 2AJOTTA-1087

Received Date: May 23, 2018

Test Date: Sep. 06, 2018 ~ Sep. 07, 2018

Issued Date: Sep. 26, 2018

Applicant: HMD Global Oy

Address: Bertel Jungin aukio 9, 02600 Espoo, Finland

Issued By: Bureau Veritas Consumer Products Services (H.K.) Ltd., Taoyuan Branch

Lab Address: No.19, Hwa Ya 2nd Rd., Wen Hwa Vil., Kwei Shan Dist., Taoyuan City 33383, TAIWAN (R.O.C.)

FCC Registration / Designation Number: 328930 / TW1050

Certificate #4327.01

Testing Laboratory 2021

This report is for your exclusive use. Any copying or replication of this report to or for any other person or entity, or use of our name or trademark, is permitted only with our prior written permission. This report sets forth our findings solely with respect to the test samples identified herein. The results set forth in this report are not indicative or representative of the quality or characteristics of the lot from which a test sample was taken or any similar or identical product unless specifically and expressly noted. Our report includes all of the tests requested by you and the results thereof based upon the information that you provided to us. You have 60 days from date of issuance of this report to notify us of any material error or omission caused by our negligence, provided, however, that such notice shall be in writing and shall specifically address the issue you wish to raise. A failure to raise such issue within the prescribed time shall constitute your unqualified acceptance of the completeness of this report, the tests conducted and the correctness of the report contents. Unless specific mention, the uncertainty of measurement has been explicitly taken into account to declare the compliance or non-compliance to the specification.
The report must not be used by the client to claim product certification, approval, or endorsement by A2LA, or any agency of the U.S. government.
The report must not be used by the client to claim product certification, approval, or endorsement by TAF or any government agencies.

Table of Contents

Release Control Record **3**

1 Certificate of Conformity **4**

2 Summary of Test Results **5**

2.1 Measurement Uncertainty 5
2.2 Modification Record 5

3 General Information **6**

3.1 Features of EUT 6
3.2 General Description of EUT 6
3.3 Operating Modes of EUT and Determination of Worst Case Operating Mode 7
3.4 Test Program Used and Operation Descriptions 7
3.5 Primary Clock Frequencies of Internal Source 8

4 Configuration and Connections with EUT **8**

4.1 Connection Diagram of EUT and Peripheral Devices 8
4.2 Configuration of Peripheral Devices and Cable Connections 9

5 Conducted Emissions at Mains Ports **10**

5.1 Limits 10
5.2 Test Instruments 10
5.3 Test Arrangement 11
5.4 Test Results 12

6 Radiated Emissions up to 1 GHz **14**

6.1 Limits 14
6.2 Test Instruments 15
6.3 Test Arrangement 16
6.4 Test Results 17

7 Radiated Emissions above 1 GHz **19**

7.1 Limits 19
7.2 Test Instruments 20
7.3 Test Arrangement 21
7.4 Test Results 22

8 Pictures of Test Arrangements **26**

Appendix – Information on the Testing Laboratories **27**

Release Control Record

Issue No.	Description	Date Issued
FD180523C09	Original Release	Jun. 28, 2018
FD180523C09 R1	Change EUT from DVT to PVT, LTE Band 41 frequency range, applicant's address, and add new earphone.	Sep. 26, 2018

1 Certificate of Conformity

Product:	Smart Phone
Brand:	NOKIA
Test Model:	TA-1087
Sample Status:	Production Unit
Applicant:	HMD Global Oy
Test Date:	Sep. 06, 2018 ~ Sep. 07, 2018
Standards:	47 CFR FCC Part 15, Subpart B, Class B ICES-003:2016 Issue 6, Class B ANSI C63.4:2014

The above equipment has been tested by **Bureau Veritas Consumer Products Services (H.K.) Ltd., Taoyuan Branch**, and found compliance with the requirement of the above standards. The test record, data evaluation & Equipment Under Test (EUT) configurations represented herein are true and accurate accounts of the measurements of the sample's EMC characteristics under the conditions specified in this report.

Prepared by : _____ , **Date:** Sep. 26, 2018

Ivonne Wu / Supervisor

Approved by : _____ , **Date:** Sep. 26, 2018

Carl Chen / Project Engineer

2 Summary of Test Results

47 CFR FCC Part 15, Subpart B / ICES-003:2016 Issue 6, Class B
ANSI C63.4:2014

FCC Clause	ICES-003 Clause	Test Item	Result/Remarks	Verdict
15.107	6.1	AC Power Line Conducted Emissions	Minimum passing Class B margin is -6.77 dB at 0.19305 MHz	Pass
15.109	6.2.1	Radiated Emissions up to 1 GHz	Minimum passing Class B margin is -3.44 dB at 159.06 MHz	Pass
	6.2.2	Radiated Emissions above 1 GHz	Minimum passing Class B margin is -21.94 dB at 2710.46 MHz	Pass

Note: There is no deviation to the applied test methods and requirements covered by the scope of this report.

2.1 Measurement Uncertainty

Where relevant, the following measurement uncertainty levels have been estimated for tests performed on the EUT:
The listed uncertainties are the worst case uncertainty for the entire range of measurement. Please note that the uncertainty values are provided for informational purposes only and are not used in determining the PASS/FAIL results.

Measurement	Frequency	Expanded Uncertainty (k=2) (±)
Conducted Emissions at mains ports	150 kHz ~ 30 MHz	2.44 dB
Radiated Emissions up to 1 GHz	30 MHz ~ 1 GHz	4.70 dB
Radiated Emissions above 1 GHz	Above 1 GHz	2.26 dB

2.2 Modification Record

There were no modifications required for compliance.

3 General Information

3.1 Features of EUT

The tests reported herein were performed according to the method specified by HMD Global Oy, for detailed feature description, please refer to the manufacturer's specifications or user's manual.

3.2 General Description of EUT

Product	Smart Phone
Brand	NOKIA
Test Model	TA-1087
Status of EUT	Production Unit
Operating Software	Android 8.1.0
Power Supply Rating	5.0 Vdc or 9 Vdc or 12 Vdc (adapter) 5.0 Vdc (host equipment) 3.85 Vdc (Li-ion battery)
Accessory Device	Refer to Note as below
Data Cable Supplied	Refer to Note as below

Note:

1. The EUT accessories list refers to EUT Photo.pdf.

3.3 Operating Modes of EUT and Determination of Worst Case Operating Mode

Test modes are presented in the report as below.

Mode	Test Condition
	Conducted Emission
1	GSM 850 Link + BT Link + WLAN (2.4G) Link + GPS & GLONASS Rx + USB Cable + Adapter 1 + SIM 1
2	WCDMA 1900 Link + BT Link + WLAN (5G) Link + Camera + USB Cable + Adapter 1 + SIM 1
3	LTE Band 2 Link + BT Link + WLAN (2.4G) Link + NFC Link + USB Cable + Adapter 1 + SIM 1
4	PCS 1900 Idle + BT Link + WLAN (2.4G) Link + ANT+ + USB Cable + USB Link with Notebook + SIM 1
5	WCDMA 850 Idle + BT Link + WLAN (2.4G) Link + MPEG4 + Wireless Charge + SIM 1
6	GSM 850 Link + BT Link + WLAN (2.4G) Link + GPS & GLONASS Rx + USB Cable + Adapter 1 + SIM 2
7	GSM 850 Link + BT Link + WLAN (2.4G) Link + GPS & GLONASS Rx + USB Cable + Adapter 2 + SIM 1
8	GSM 850 Link + BT Link + WLAN (2.4G) Link + GPS & GLONASS Rx + USB Cable + Adapter 3 + SIM 1
	Radiated Emission
1	GSM 850 Link + BT Link + WLAN (2.4G) Link + GPS & GLONASS Rx + USB Cable + Adapter 1 + SIM 1
2	WCDMA 1900 Link + BT Link + WLAN (5G) Link + GALILEO Rx + USB Cable + Adapter 1 + SIM 1
3	LTE Band 2 Link + BT Link + WLAN (2.4G) Link + NFC Link + USB Cable + Adapter 1 + SIM 1
4	PCS 1900 Idle + BT Link + WLAN (2.4G) Link + ANT+ + USB Cable + USB Link with Notebook + SIM 1
5	WCDMA 850 Idle + BT Link + WLAN (2.4G) Link + Camera + Wireless Charge + SIM 1
6	LTE Band 12 Idle + BT Link + WLAN (2.4G) Link + MPEG4 + Earphone 1 + Audio Jack + SIM 1
7	GSM 850 Link + BT Link + WLAN (2.4G) Link + GPS & GLONASS Rx + USB Cable + Adapter 1 + SIM 2
8	GSM 850 Link + BT Link + WLAN (2.4G) Link + GPS & GLONASS Rx + USB Cable + Adapter 2 + SIM 1
9	GSM 850 Link + BT Link + WLAN (2.4G) Link + GPS & GLONASS Rx + USB Cable + Adapter 3 + SIM 1
10	GSM 850 Link + BT Link + WLAN (2.4G) Link + MPEG4 + Earphone 2 + Audio Jack + SIM 1

Remark:

1. For conducted emission test, test mode 1 was the worst case and only this mode was presented in the report.
2. For radiated emission test, test mode 1 was the worst case and only this mode was presented in the report.

3.4 Test Program Used and Operation Descriptions

a. The EUT linked with Bluetooth earphone.

b. The NFC function was turned on.

c. The EUT communicated data with the Radio Communication Analyzer, GPS simulator, and Wireless AP, which acted as communication partners.

3.5 Primary Clock Frequencies of Internal Source

The highest frequency generated or used within the EUT or on which the EUT operates or tunes is 5000 MHz, provided by HMD Global Oy, for detailed internal source, please refer to the manufacturer's specifications.

4 Configuration and Connections with EUT

4.1 Connection Diagram of EUT and Peripheral Devices

<Mode 1>

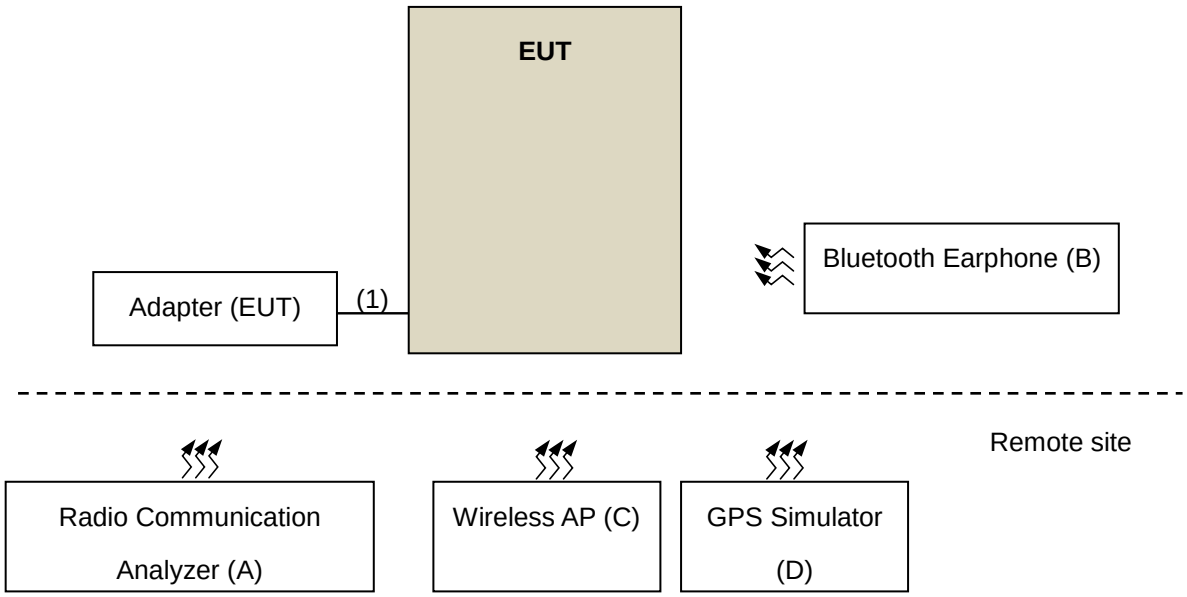

<Mode 4>

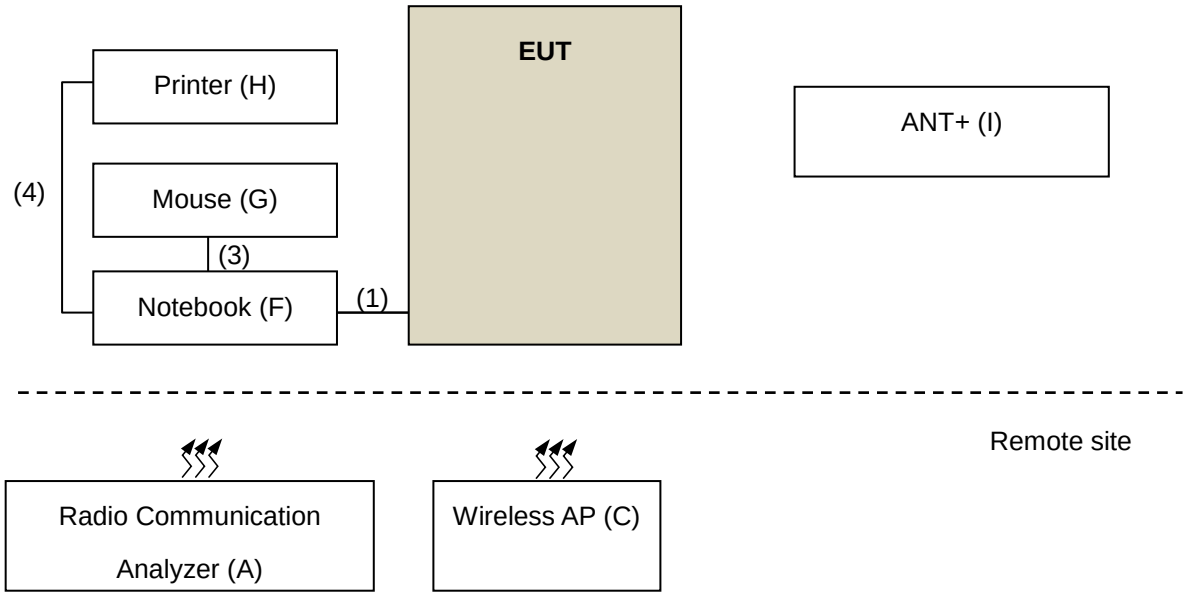

<Mode 5>

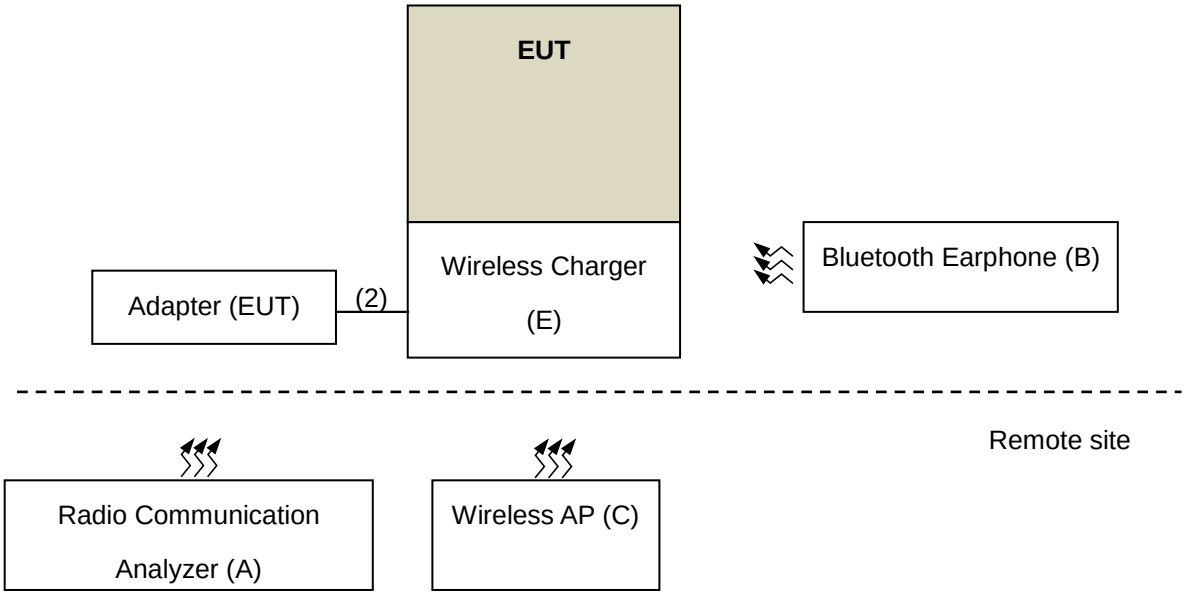

4.2 Configuration of Peripheral Devices and Cable Connections

ID	Product	Brand	Model No.	Serial No.	FCC ID	Remarks
A.	Radio Communication Analyzer	Anritsu	MT8820C	6201240432	N/A	--
B.	BLUETOOTH EARPHONE	ELECOM	LBT-MPHS400	N/A	N/A	--
C.	Wireless AP	D-LINK	DIR826L	QBQ91C9000416	N/A	--
D.	GPS simulator	PENDULUM	GSG-54	191121	N/A	--
E.	Wireless Charger	Samsung	EP-PG9201	RF7G82F5VFRCIS	N/A	--
F.	Notebook	DELL	E5440	D920P32	N/A	--
G.	Mouse	DELL	MO56U0	516056379	FCC DoC Approved	--
H.	Printer	EPSON	LQ-300+	DCGY054147	FCC DoC Approved	--
I.	ANT+	MW	CARDIOSPORT	N/A	N/A	--

Note:

1. All power cords of the above support units are non-shielded (1.8m).
2. Items A~D acted as communication partners to transfer data.

ID	Descriptions	Qty.	Length (m)	Shielding (Yes/No)	Cores (Qty.)	Remarks
1.	USB Cable	1	0.95	Y	0	Accessory of the EUT
2.	USB Cable	1	1.2	Y	0	--
3.	USB Cable	1	1.2	Y	0	--
4.	USB Cable	1	1.8	Y	0	--

Note: The core(s) is(are) originally attached to the cable(s).

5 Conducted Emissions at Mains Ports

5.1 Limits

Frequency (MHz)	Class A (dBuV)		Class B (dBuV)	
	Quasi-peak	Average	Quasi-peak	Average
0.15 - 0.5	79	66	66 - 56	56 - 46
0.50 - 5.0	73	60	56	46
5.0 - 30.0	73	60	60	50

Notes: 1. The lower limit shall apply at the transition frequencies.
2. The limit decreases linearly with the logarithm of the frequency in the range of 0.15 to 0.50 MHz.

5.2 Test Instruments

Description & Manufacturer	Model No.	Serial No.	Cal. Date	Cal. Due
Test Receiver ROHDE & SCHWARZ	ESCI	100613	Nov. 23, 2017	Nov. 22, 2018
RF signal cable Woken	5D-FB	Cable-cond1-01	Sep. 05, 2018	Sep. 04, 2019
LISN/AMN ROHDE & SCHWARZ (EUT)	ENV216	101826	Feb. 26, 2018	Feb. 25, 2019
LISN/AMN ROHDE & SCHWARZ (Peripheral)	ENV216	101196	Apr. 24, 2018	Apr. 23, 2019
Software ADT	BV ADT_Cond_ V7.3.7.4	NA	NA	NA

Note: 1. The calibration interval of the above test instruments is 12 months and the calibrations are traceable to NML/ROC and NIST/USA.
2. The test was performed in HwaYa Shielded Room 1.
3. The VCCI Site Registration No. is C-2040.

5.3 Test Arrangement

a. The EUT was placed 0.4 meters from the conducting wall of the shielded room with EUT being connected to the power mains through a line impedance stabilization network (LISN). Other support units were connected to the power mains through another LISN. The two LISNs provide 50 Ohm/ 50 uH of coupling impedance for the measuring instrument.

b. Both lines of the power mains connected to the EUT were checked for maximum conducted interference.

c. The test results of conducted emissions at mains ports are recorded of six worst margins for quasi-peak (mandatory) [and average (if necessary)] values against the limits at frequencies of interest unless the margin is 20 dB or greater.

Note: The resolution bandwidth and video bandwidth of test receiver is 9 kHz for quasi-peak detection (QP) and average detection (AV) at frequency 0.15 MHz – 30 MHz.

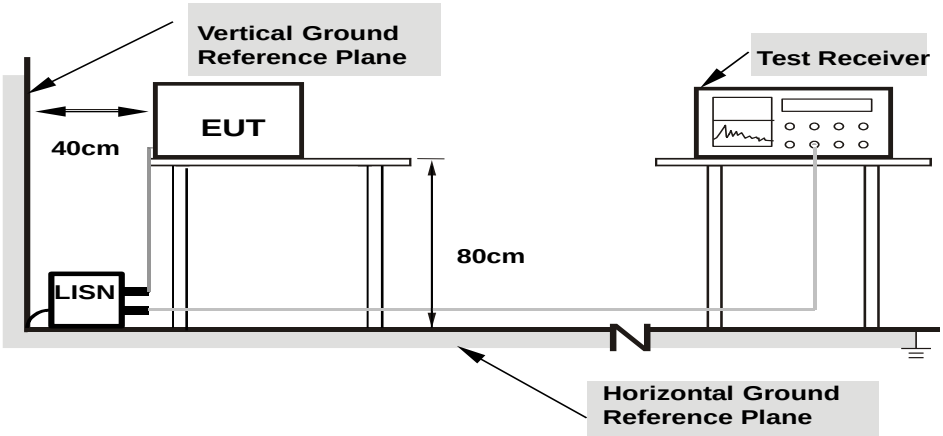

Note: 1.Support units were connected to second LISN.
2.Both of LISNs (AMN) are 80 cm from EUT and at least 80 cm from other units and other metal planes

5.4 Test Results

Frequency Range	150kHz ~ 30MHz	Detector Function & Resolution Bandwidth	Quasi-Peak (QP) / Average (AV), 9kHz
Input Power	120Vac, 60Hz	Environmental Conditions	20℃, 60%RH
Tested by	Pon Tsai	Test Date	2018/9/7
Test Mode	Mode 1		

Phase Of Power : Line (L)										
No	Frequency (MHz)	Correction Factor (dB)	Reading Value (dBuV)		Emission Level (dBuV)		Limit (dBuV)		Margin (dB)	
			Q.P.	AV.	Q.P.	AV.	Q.P.	AV.	Q.P.	AV.
1	0.15391	9.73	47.36	32.57	57.09	42.30	65.79	55.79	-8.70	-13.49
2	0.18128	9.72	44.84	29.84	54.56	39.56	64.43	54.43	-9.87	-14.87
3	**0.19305**	**9.72**	**47.41**	**33.01**	**57.13**	**42.73**	**63.90**	**53.90**	**-6.77**	**-11.17**
4	0.22429	9.72	40.86	25.82	50.58	35.54	62.66	52.66	-12.08	-17.12
5	0.25166	9.73	39.97	26.27	49.70	36.00	61.70	51.70	-12.00	-15.70
6	0.29120	9.73	37.88	23.10	47.61	32.83	60.49	50.49	-12.88	-17.66
7	0.48626	9.74	33.83	27.51	43.57	37.25	56.23	46.23	-12.66	-8.98

Remarks:

1. Q.P. and AV. are abbreviations of quasi-peak and average individually.
2. The emission levels of other frequencies were very low against the limit.
3. Margin value = Emission level – Limit value
4. Correction factor = Insertion loss + Cable loss
5. Emission Level = Correction Factor + Reading Value

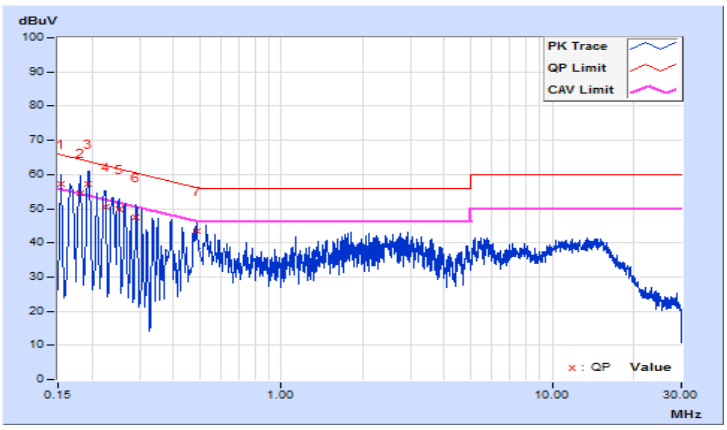

Frequency Range	150kHz ~ 30MHz	Detector Function & Resolution Bandwidth	Quasi-Peak (QP) / Average (AV), 9kHz
Input Power	120Vac, 60Hz	Environmental Conditions	20℃, 60%RH
Tested by	Pon Tsai	Test Date	2018/9/7
Test Mode	Mode 1		

Phase Of Power : Neutral (N)										
No	Frequency (MHz)	Correction Factor (dB)	Reading Value (dBuV)		Emission Level (dBuV)		Limit (dBuV)		Margin (dB)	
			Q.P.	AV.	Q.P.	AV.	Q.P.	AV.	Q.P.	AV.
1	0.15391	9.72	43.87	28.68	53.59	38.40	65.79	55.79	-12.20	-17.39
2	0.16955	9.72	40.62	24.33	50.34	34.05	64.98	54.98	-14.64	-20.93
3	0.19692	9.73	43.90	28.25	53.63	37.98	63.74	53.74	-10.11	-15.76
4	0.23993	9.73	38.27	23.87	48.00	33.60	62.10	52.10	-14.10	-18.50
5	0.29467	9.74	35.00	19.52	44.74	29.26	60.39	50.39	-15.65	-21.13
6	0.50000	9.74	26.39	12.61	36.13	22.35	56.00	46.00	-19.87	-23.65

Remarks:

1. Q.P. and AV. are abbreviations of quasi-peak and average individually.
2. The emission levels of other frequencies were very low against the limit.
3. Margin value = Emission level – Limit value
4. Correction factor = Insertion loss + Cable loss
5. Emission Level = Correction Factor + Reading Value

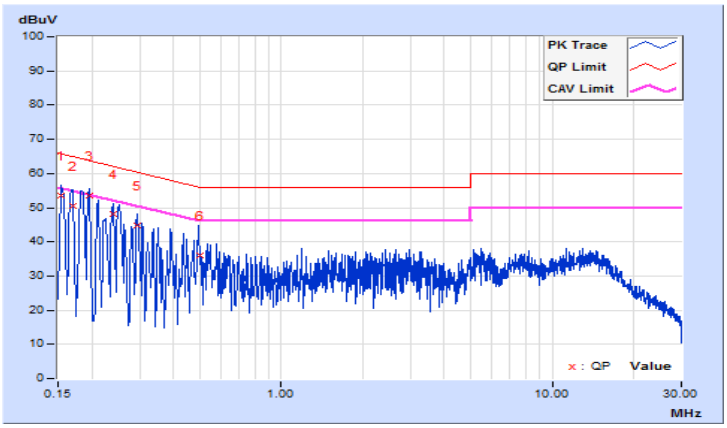

6 Radiated Emissions up to 1 GHz

6.1 Limits

Emissions radiated outside of the specified bands, shall be according to the general radiated limits as following:

Radiated Emissions Limits at 10 meters (dBµV/m)				
Frequencies (MHz)	FCC 15B / ICES-003, Class A	FCC 15B / ICES-003, Class B	CISPR 22, Class A	CISPR 22, Class B
30-88	39	29.5	40	30
88-216	43.5	33.1		
216-230	46.4	35.6		
230-960			47	37
960-1000	49.5	43.5		

Radiated Emissions Limits at 3 meters (dBµV/m)				
Frequencies (MHz)	FCC 15B / ICES-003, Class A	FCC 15B / ICES-003, Class B	CISPR 22, Class A	CISPR 22, Class B
30-88	49.5	40	50.5	40.5
88-216	54	43.5		
216-230	56.9	46		
230-960			57.5	47.5
960-1000	60	54		

Notes:

1. The lower limit shall apply at the transition frequencies.
2. Emission level (dBuV/m) = 20 log Emission level (uV/m).
3. QP detector shall be applied if not specified.

6.2 Test Instruments

Description & Manufacturer	Model No.	Serial No.	Cal. Date	Cal. Due
Test Receiver ROHDE & SCHWARZ (V)	ESR	101240	Oct. 24, 2017	Oct. 23, 2018
Test Receiver ROHDE & SCHWARZ (H)	ESR	101264	Dec. 25, 2017	Dec. 24, 2018
BILOG Antenna SCHWARZBECK (V)	VULB9168	9168-160	Nov. 29, 2017	Nov. 28, 2018
BILOG Antenna SCHWARZBECK (H)	VULB9168	9168-156	Nov. 29, 2017	Nov. 28, 2018
Preamplifier Sonoma (V)	310N	352924	Jul. 12, 2018	Jul. 11, 2019
Preamplifier Sonoma (H)	310N	352923	Jul. 12, 2018	Jul. 11, 2019
RF signal cable (with 5dB PAD) Times (V)	LMR-600 (18M) +LMR-400 (7M)	CABLE-CH1 (VER) -01	Oct. 24, 2017	Oct. 23, 2018
RF signal cable (with 5dB PAD) Times (H)	LMR-600 (11.8M) +LMR-400 (7M)	CABLE-CH1 (HOR) -01	Oct. 24, 2017	Oct. 23, 2018
Software BV ADT	BV ADT_Radiated_ V8.7.08	NA	NA	NA
Antenna Tower (V)	MFA-440	9707	NA	NA
Antenna Tower (H)	MFA-440	970705	NA	NA
Turn Table	DS430	50303	NA	NA
Controller (V)	MF7802	074	NA	NA
Controller (H)	MF7802	08093	NA	NA

NOTE:
1. The calibration interval of the above test instruments is 12 months and the calibrations are traceable to NML/ROC and NIST/USA.
2. The test was performed in HwaYa Chamber 1.
3. The IC Site Registration No. is IC 7450F-1.
4. The VCCI Site Registration No. is R-1893.

6.3 Test Arrangement

a. The EUT was placed on the top of a rotating table 0.8 meters above the ground at an accredited test facility. The table was rotated 360 degrees to determine the position of the highest radiation.
b. The EUT was set 10 meters away from the interference-receiving antenna, which was mounted on the top of a variable-height antenna tower.
c. The antenna is a broadband antenna, and its height is varied from one meter to four meters above the ground to determine the maximum value of the field strength. Both horizontal and vertical polarizations of the antenna are set to make the measurement.
d. For each suspected emission, the EUT was arranged to its worst case and then the antenna was tuned to heights from 1 meter to 4 meters and the rotatable table was turned from 0 degrees to 360 degrees to find the maximum reading.
e. The test-receiver system was set to quasi-peak detect function and specified bandwidth with maximum hold mode when the test frequency is below 1 GHz.

Note: The resolution bandwidth and video bandwidth of test receiver/spectrum analyzer is 120 kHz for quasi-peak detection (QP) at frequency below 1 GHz.

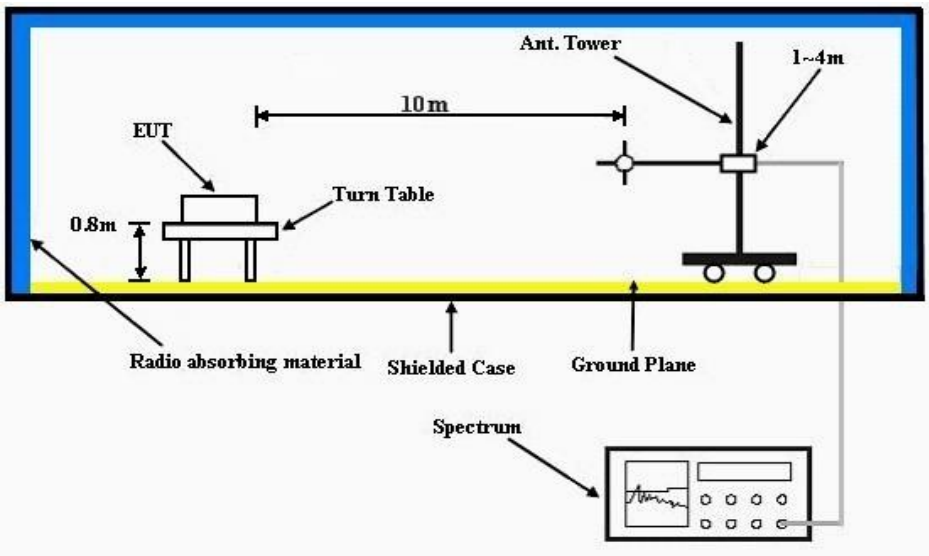

6.4 Test Results

Frequency Range	30MHz ~ 1GHz	Detector Function & Resolution Bandwidth	Quasi-Peak (QP), 120kHz
Input Power	120Vac, 60Hz	Environmental Conditions	25℃, 65%RH
Tested by	Jim Lee	Test Date	2018/9/6
Test Mode	Mode 1		

Antenna Polarity & Test Distance : Horizontal at 10 m								
No	Frequency (MHz)	Emission Level (dBuV/m)	Limit (dBuV/m)	Margin (dB)	Antenna Height (m)	Table Angle (Degree)	Raw Value (dBuV)	Correction Factor (dB/m)
1	80.69	19.57 QP	30.00	-10.43	4.00 H	209	36.83	-17.26
2	159.06	18.96 QP	30.00	-11.04	4.00 H	225	31.90	-12.94
3	486.60	27.56 QP	37.00	-9.44	1.00 H	17	34.58	-7.02
4	722.86	27.18 QP	37.00	-9.82	1.00 H	245	29.42	-2.24
5	813.65	28.03 QP	37.00	-8.97	1.00 H	220	29.67	-1.64
6	954.60	29.56 QP	37.00	-7.44	3.50 H	171	28.79	0.77

Remarks:

1. Emission Level(dBuV/m) = Raw Value(dBuV) + Correction Factor(dB/m)
2. Correction Factor(dB/m) = Antenna Factor (dB/m) + Cable Factor (dB) – Pre-Amplifier Factor (dB)
3. The other emission levels were very low against the limit.
4. Margin value = Emission level – Limit value

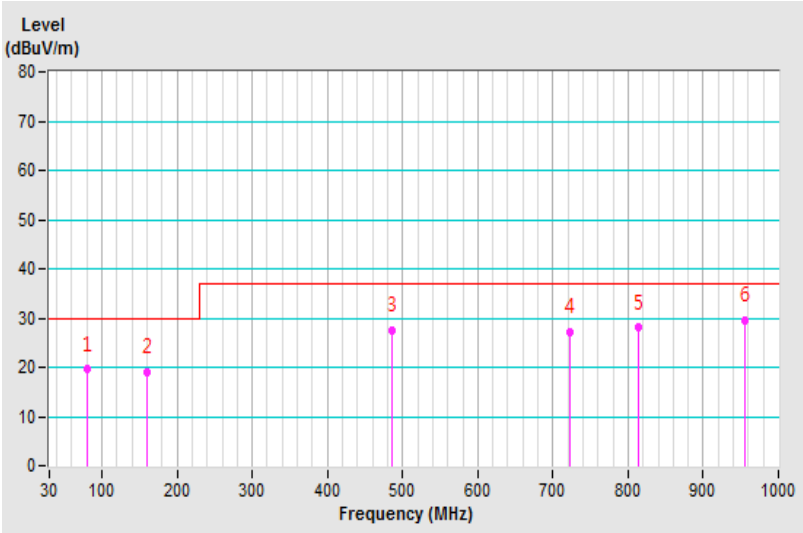

Frequency Range	30MHz ~ 1GHz	Detector Function & Resolution Bandwidth	Quasi-Peak (QP), 120kHz
Input Power	120Vac, 60Hz	Environmental Conditions	25℃, 65%RH
Tested by	Jim Lee	Test Date	2018/9/6
Test Mode	Mode 1		

Antenna Polarity & Test Distance : Vertical at 10 m								
No	Frequency (MHz)	Emission Level (dBuV/m)	Limit (dBuV/m)	Margin (dB)	Antenna Height (m)	Table Angle (Degree)	Raw Value (dBuV)	Correction Factor (dB/m)
1	48.33	25.06 QP	30.00	-4.94	1.00 V	160	38.74	-13.68
2	80.25	25.20 QP	30.00	-4.80	1.50 V	352	42.45	-17.25
3	91.11	25.61 QP	30.00	-4.39	1.50 V	194	43.94	-18.33
4	**159.06**	**26.56 QP**	**30.00**	**-3.44**	**1.00 V**	**250**	**39.48**	**-12.92**
5	179.68	21.76 QP	30.00	-8.24	1.00 V	2	35.63	-13.87
6	794.83	27.50 QP	37.00	-9.50	1.00 V	103	28.49	-0.99

Remarks:

1. Emission Level(dBuV/m) = Raw Value(dBuV) + Correction Factor(dB/m)
2. Correction Factor(dB/m) = Antenna Factor (dB/m) + Cable Factor (dB) – Pre-Amplifier Factor (dB)
3. The other emission levels were very low against the limit.
4. Margin value = Emission level – Limit value

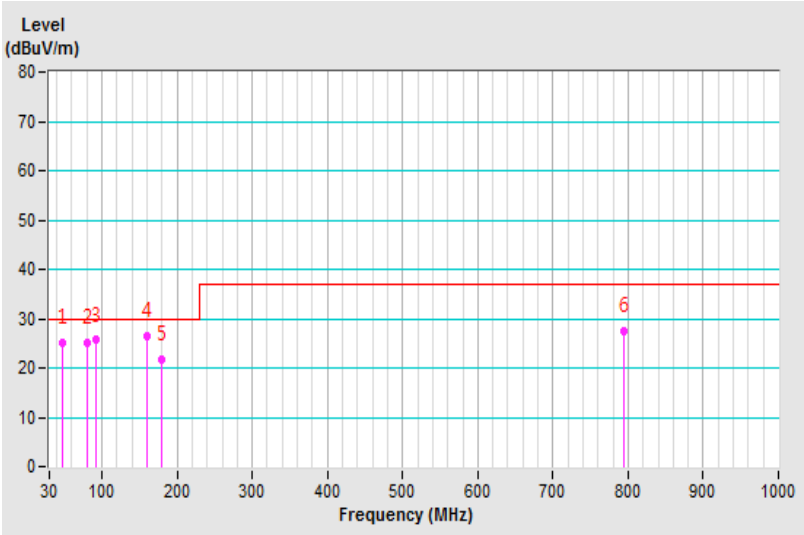

7 Radiated Emissions above 1 GHz

7.1 Limits

Emissions radiated outside of the specified bands, shall be according to the general radiated limits as following:

Radiated Emissions Limits at 10 meters (dBµV/m)				
Frequencies (MHz)	FCC 15B / ICES-003, Class A	FCC 15B / ICES-003, Class B	CISPR 22, Class A	CISPR 22, Class B
1000-3000	Avg: 49.5 Peak: 69.5	Avg: 43.5 Peak: 63.5	Not defined	Not defined
Above 3000			Not defined	Not defined

Radiated Emissions Limits at 3 meters (dBµV/m)				
Frequencies (MHz)	FCC 15B / ICES-003, Class A	FCC 15B / ICES-003, Class B	CISPR 22, Class A	CISPR 22, Class B
1000-3000	Avg: 60 Peak: 80	Avg: 54 Peak: 74	Avg: 56 Peak: 76	Avg: 50 Peak: 70
Above 3000			Avg: 60 Peak: 80	Avg: 54 Peak: 74

Notes:

1. The lower limit shall apply at the transition frequencies.
2. Emission level (dBuV/m) = 20 log Emission level (uV/m).
3. As shown in 15.35(b), for frequencies above 1000 MHz, the field strength limits are based on average detector, however, the peak field strength of any emission shall not exceed the maximum permitted average limits, specified above by more than 20 dB under any condition of modulation.

Radiated Emissions Limits at 1.5 meters (dBµV/m)		
Frequencies (MHz)	FCC 15B / ICES-003, Class A	FCC 15B / ICES-003, Class B
Above 18000	Avg: 66 Peak: 86	Avg: 60 Peak: 80

Note: Limit@1.5m = Limit@3m + 20log(3/1.5)

Frequency Range (For unintentional radiators)

Highest frequency generated or used in the device or on which the device operates or tunes (MHz)	Upper frequency of measurement range (MHz)
Below 1.705	30
1.705-108	1000
108-500	2000
500-1000	5000
Above 1000	5th harmonic of the highest frequency or 40 GHz, whichever is lower

7.2 Test Instruments

Description & Manufacturer	Model No.	Serial No.	Cal. Date	Cal. Due
Test Receiver ROHDE & SCHWARZ (Above 1GHz)	ESR7	101471	Mar. 01, 2018	Feb. 28, 2019
Spectrum Analyzer KEYSIGHT	N9030B	MY57141885	May 28, 2018	May 27, 2019
BILOG Antenna SCHWARZBECK	VULB9168	9168-157	Nov. 29, 2017	Nov. 28, 2018
RF signal cable (with 5dB PAD) Times	LMR-400 (18M)	CABLE-CH2-01	Apr. 27, 2018	Apr. 26, 2019
HORN Antenna (with 4dB PAD) SCHWARZBECK	BBHA 9120 D	9120D-405	Dec. 01, 2017	Nov. 30, 2018
Preamplifier Agilent (Above 1GHz)	8449B	3008A01922	Sep. 15, 2017	Sep. 14, 2018
Software BV ADT	BV ADT_Radiated_ V8.7.08	NA	NA	NA
Antenna Tower BV ADT	AT100	AT93021702	NA	NA
Turn Table BV ADT	TT100	TT93021702	NA	NA
Controller BV ADT	SC100	SC93021702	NA	NA
RF Coaxial Cable EMCI	EMC102-KM-KM-1 000	170820	Aug. 28, 2018	Aug. 27, 2019
RF Coaxial Cable EMCI	EMC102-KM-KM-3 000	150929	Aug. 28, 2018	Aug. 27, 2019
RF Coaxial Cable JUNFLON+EMC	JUNFLON+EMC10 4-SM-SM-6000	Cable-CH2-02(MWX3221308 G003+130710)	Jun. 11, 2018	Jun. 10, 2019
Fix tool for Boresight antenna	BAF-01	2	NA	NA
Pre-amplifier (18GHz-40GHz) EMC	EMC184045B	980175	Nov. 14, 2017	Nov. 13, 2018
HORN Antenna (with 3dB PAD) SCHWARZBECK	BBHA 9170	148	Dec. 13, 2017	Dec. 12, 2018

Note:
1. The calibration interval of the above test instruments is 12 months and the calibrations are traceable to NML/ROC and NIST/USA.
2. The test was performed in HwaYa Chamber 2.
3. The horn antenna and HP preamplifier (model: 8449B) are used only for the measurement of emission frequency above 1GHz if tested.
4. The IC Site Registration No. is IC 7450F-2.
5. The VCCI Site Registration No. is G-10018.

7.3 Test Arrangement

a. The EUT was placed on the top of a rotating table 0.8 meters above the ground at an accredited chamber room. The table was rotated 360 degrees to determine the position of the highest radiation.
b. For frequency range 1 GHz ~ 18 GHz, the EUT was set 3 meters away from the interference-receiving antenna, which was mounted on the top of a variable-height antenna tower.
c. For frequency range 18 GHz ~ 40 GHz, the EUT was set 1.5 meters away from the interference-receiving antenna, which was mounted on the top of a variable-height antenna tower.
d. The height of antenna can be varied from one meter to four meters, the height of adjustment depends on the EUT height and the antenna 3 dB beamwidth both, to detect the maximum value of the field strength. Both horizontal and vertical polarizations of the antenna are set to make the measurement.
e. For each suspected emission, the EUT was arranged to its worst case and then the antenna was tuned to heights and the rotatable table was turned from 0 degrees to 360 degrees to find the maximum reading.
f. The spectrum analyzer system was set to peak and average detect function and specified bandwidth with maximum hold mode when the test frequency is above 1 GHz.

Note: The resolution bandwidth of test receiver/spectrum analyzer is 1 MHz and video bandwidth is 3 MHz for Peak detection (PK) at frequency above 1 GHz. The resolution bandwidth of test receiver/spectrum analyzer is 1 MHz for Average detection (AV) at frequency above 1 GHz.

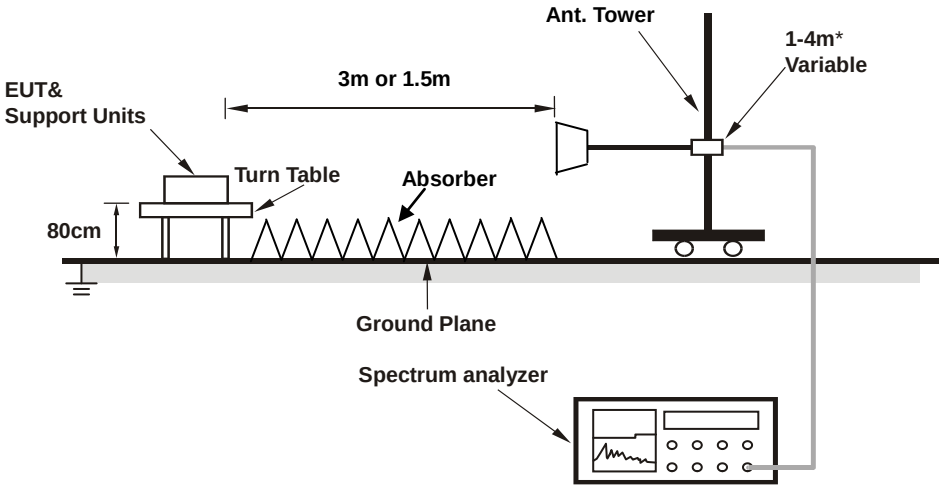

7.4 Test Results

Frequency Range	1GHz ~ 18GHz	Detector Function & Resolution Bandwidth	Peak (PK) / Average (AV), 1MHz
Input Power	120Vac, 60Hz	Environmental Conditions	25℃, 65%RH
Tested by	James Chang	Test Date	2018/9/7
Test Mode	Mode 1		

Antenna Polarity & Test Distance : Horizontal at 3 m								
No	Frequency (MHz)	Emission Level (dBuV/m)	Limit (dBuV/m)	Margin (dB)	Antenna Height (m)	Table Angle (Degree)	Raw Value (dBuV)	Correction Factor (dB/m)
1	2290.21	43.10 PK	74.00	-30.90	1.50 H	140	41.07	2.03
2	2290.21	29.78 AV	54.00	-24.22	1.50 H	140	27.75	2.03
3	2660.36	43.86 PK	74.00	-30.14	1.00 H	272	41.22	2.64
4	2660.36	30.10 AV	54.00	-23.90	1.00 H	272	27.46	2.64
5	2850.04	44.07 PK	74.00	-29.93	1.00 H	137	40.92	3.15
6	2850.04	31.63 AV	54.00	-22.37	1.00 H	137	28.48	3.15

Remarks:

1. Emission Level(dBuV/m) = Raw Value(dBuV) + Correction Factor(dB/m)
2. Correction Factor(dB/m) = Antenna Factor (dB/m) + Cable Factor (dB) – Pre-Amplifier Factor (dB)
3. The other emission levels were very low against the limit.
4. Margin value = Emission level – Limit value

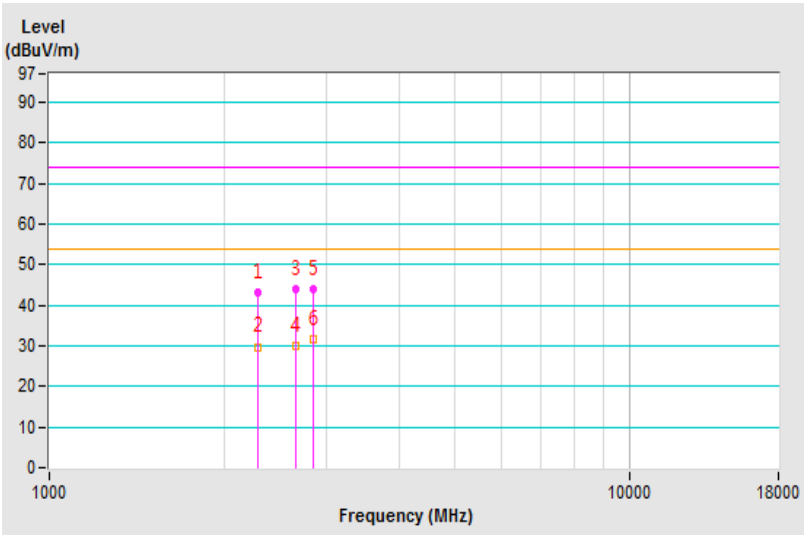

Frequency Range	1GHz ~ 18GHz	Detector Function & Resolution Bandwidth	Peak (PK) / Average (AV), 1MHz
Input Power	120Vac, 60Hz	Environmental Conditions	25℃, 65%RH
Tested by	James Chang	Test Date	2018/9/7
Test Mode	Mode 1		

Antenna Polarity & Test Distance : Vertical at 3 m								
No	Frequency (MHz)	Emission Level (dBuV/m)	Limit (dBuV/m)	Margin (dB)	Antenna Height (m)	Table Angle (Degree)	Raw Value (dBuV)	Correction Factor (dB/m)
1	1510.29	40.54 PK	74.00	-33.46	1.75 V	306	42.59	-2.05
2	1510.29	30.31 AV	54.00	-23.69	1.75 V	306	32.36	-2.05
3	2370.11	43.07 PK	74.00	-30.93	1.25 V	214	41.01	2.06
4	2370.11	31.15 AV	54.00	-22.85	1.25 V	214	29.09	2.06
5	2710.46	45.08 PK	74.00	-28.92	1.00 V	25	42.08	3.00
6	**2710.46**	**32.06 AV**	**54.00**	**-21.94**	**1.00 V**	**25**	**29.06**	**3.00**

Remarks:

1. Emission Level(dBuV/m) = Raw Value(dBuV) + Correction Factor(dB/m)
2. Correction Factor(dB/m) = Antenna Factor (dB/m) + Cable Factor (dB) – Pre-Amplifier Factor (dB)
3. The other emission levels were very low against the limit.
4. Margin value = Emission level – Limit value

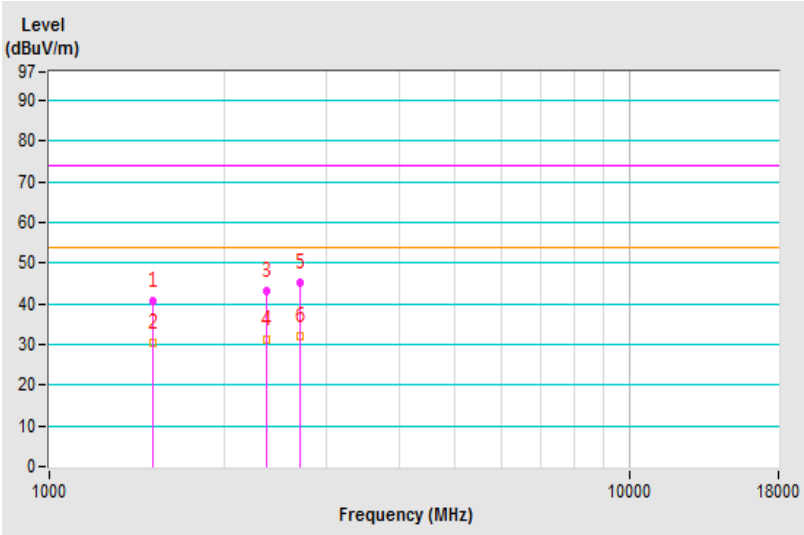

Frequency Range	18GHz ~ 40GHz	Detector Function & Resolution Bandwidth	Peak (PK) / Average (AV), 1MHz
Input Power	120Vac, 60Hz	Environmental Conditions	25℃, 65%RH
Tested by	James Chang	Test Date	2018/9/7
Test Mode	Mode 1		

Antenna Polarity & Test Distance : Horizontal at 1.5 m								
No	Frequency (MHz)	Emission Level (dBuV/m)	Limit (dBuV/m)	Margin (dB)	Antenna Height (m)	Table Angle (Degree)	Raw Value (dBuV)	Correction Factor (dB/m)
1	22384.79	51.45 PK	80.00	-28.55	1.00 H	305	50.65	0.80
2	22384.79	37.75 AV	60.00	-22.25	1.00 H	305	36.95	0.80

Remarks:

1. Emission Level(dBuV/m) = Raw Value(dBuV) + Correction Factor(dB/m)
2. Correction Factor(dB/m) = Antenna Factor (dB/m) + Cable Factor (dB) – Pre-Amplifier Factor (dB)
3. The other emission levels were very low against the limit.
4. Margin value = Emission level – Limit value

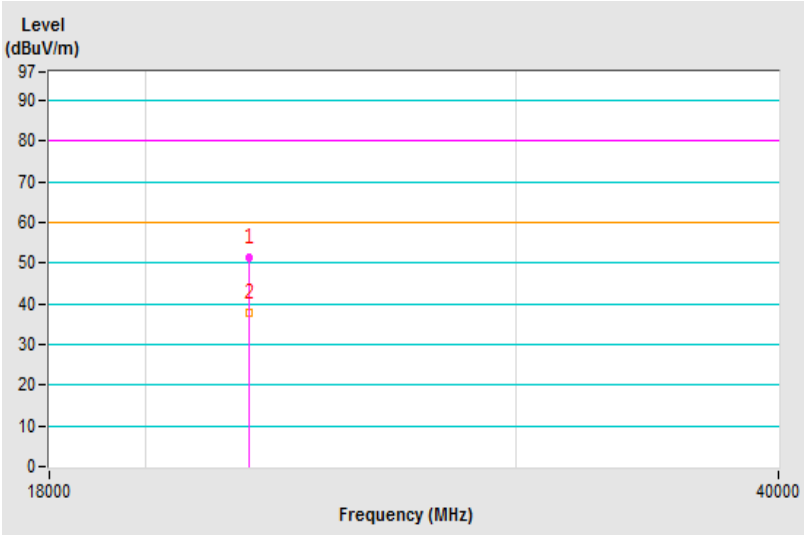

Frequency Range	18GHz ~ 40GHz	Detector Function & Resolution Bandwidth	Peak (PK) / Average (AV), 1MHz
Input Power	120Vac, 60Hz	Environmental Conditions	25℃, 65%RH
Tested by	James Chang	Test Date	2018/9/7
Test Mode	Mode 1		

Antenna Polarity & Test Distance : Vertical at 1.5 m								
No	Frequency (MHz)	Emission Level (dBuV/m)	Limit (dBuV/m)	Margin (dB)	Antenna Height (m)	Table Angle (Degree)	Raw Value (dBuV)	Correction Factor (dB/m)
1	22706.63	52.20 PK	80.00	-27.80	1.00 V	15	51.73	0.47
2	22706.63	37.03 AV	60.00	-22.97	1.00 V	15	36.56	0.47

Remarks:

1. Emission Level(dBuV/m) = Raw Value(dBuV) + Correction Factor(dB/m)
2. Correction Factor(dB/m) = Antenna Factor (dB/m) + Cable Factor (dB) – Pre-Amplifier Factor (dB)
3. The other emission levels were very low against the limit.
4. Margin value = Emission level – Limit value

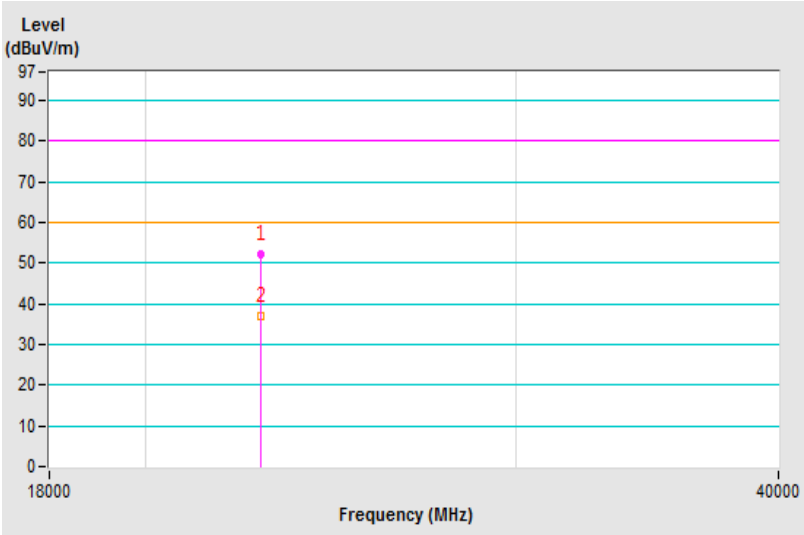

8 Pictures of Test Arrangements

Refer to Test Setup Photographs

Appendix – Information on the Testing Laboratories

We, Bureau Veritas Consumer Products Services (H.K.) Ltd., Taoyuan Branch, were founded in 1988 to provide our best service in EMC, Radio, Telecom and Safety consultation. Our laboratories are FCC recognized accredited test firms and accredited according to ISO/IEC 17025.

If you have any comments, please feel free to contact us at the following:

Linko EMC/RF Lab
Tel: 886-2-26052180
Fax: 886-2-26051924

Hsin Chu EMC/RF/Telecom Lab
Tel: 886-3-6668565
Fax: 886-3-6668323

Hwa Ya EMC/RF/Safety Lab
Tel: 886-3-3183232
Fax: 886-3-3270892

Email: service.adt@tw.bureauveritas.com
Web Site: www.bureauveritas-adt.com

The address and road map of all our labs can be found in our web site also.

--- END ---