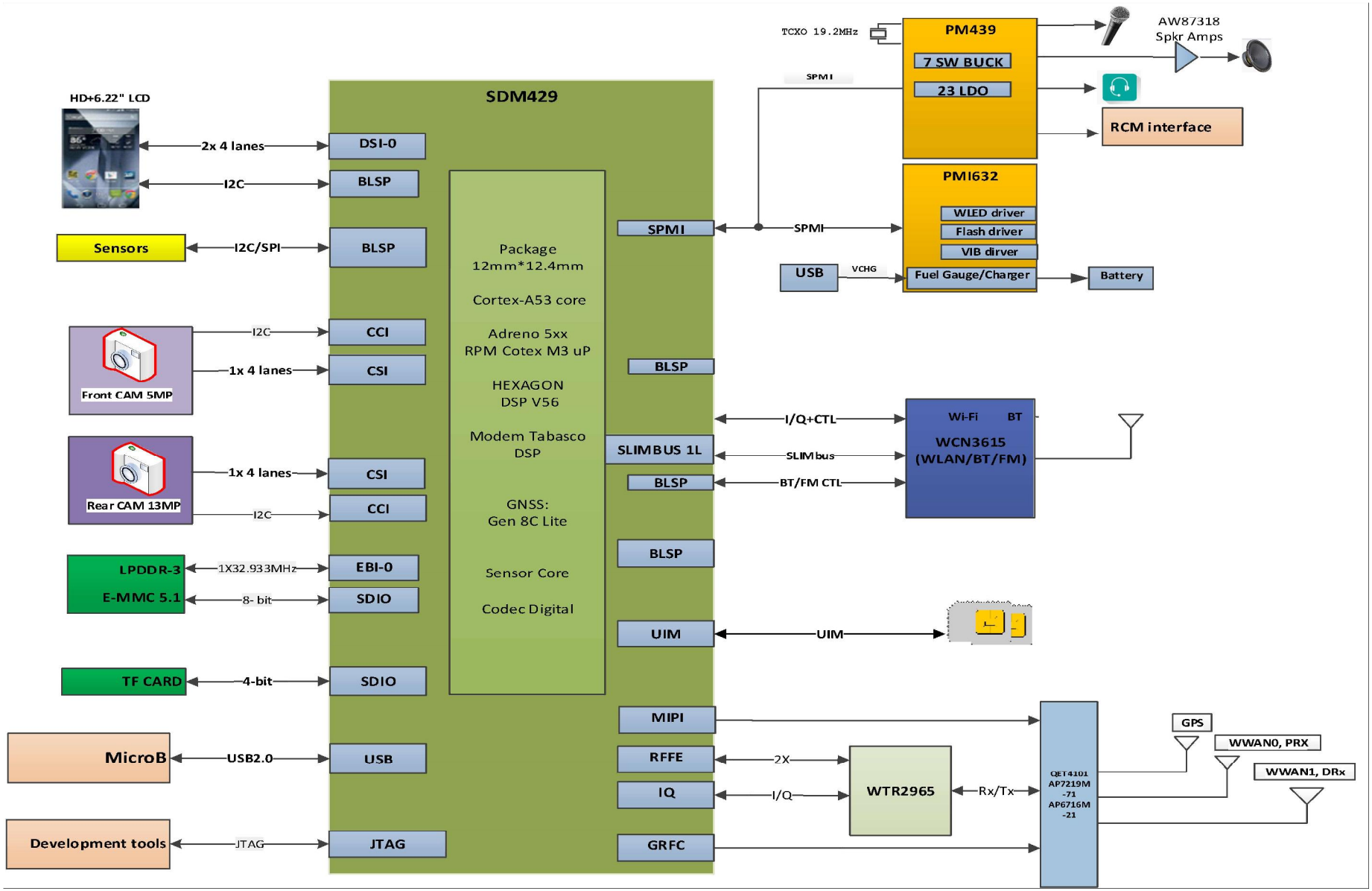

Block Diagram

Title	03.Block Diagram	REV: V10
DOCUMENT NO.:	80626_1_12 SKU1_HA1 TA1164	Size: D
DEPARTMENT:	Wingtech-SZ	DESIGNER: DESIGNER
Date:	Monday, March 25, 2019	Sheet 3 of 82

WINGTECH

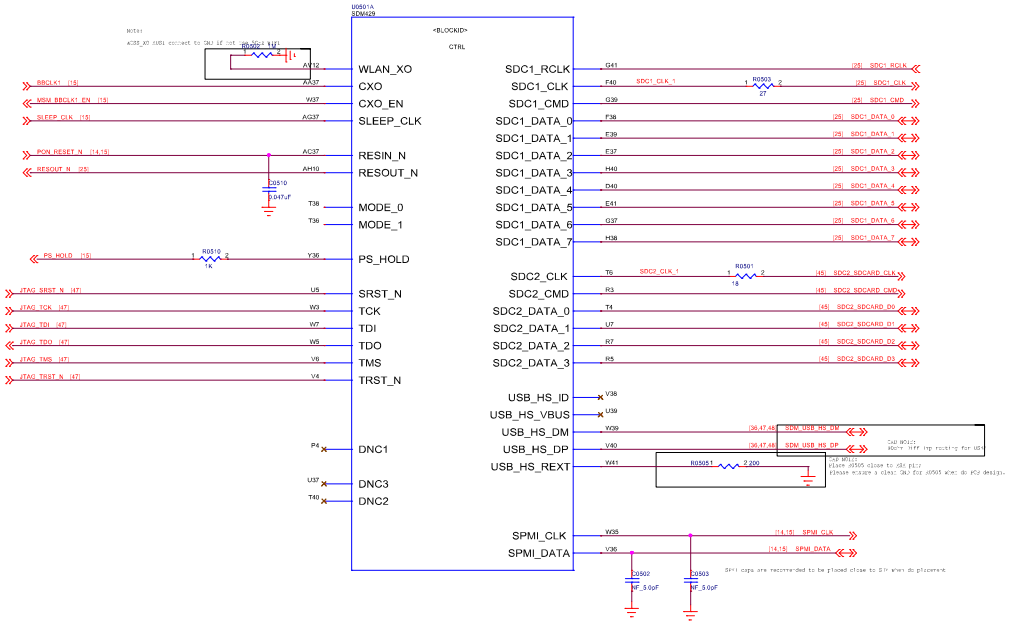

SDM429
Control

Title	05.SDM429	REV: V10
DOCUMENT NO.:	80626_1_12 SKU1_HA1 TA1164	Size D
DEPARTMENT:	Wingtech-SZ	DESIGNER: DESIGNER
Date:	Monday, March 25, 2019	Sheet 5 of 82

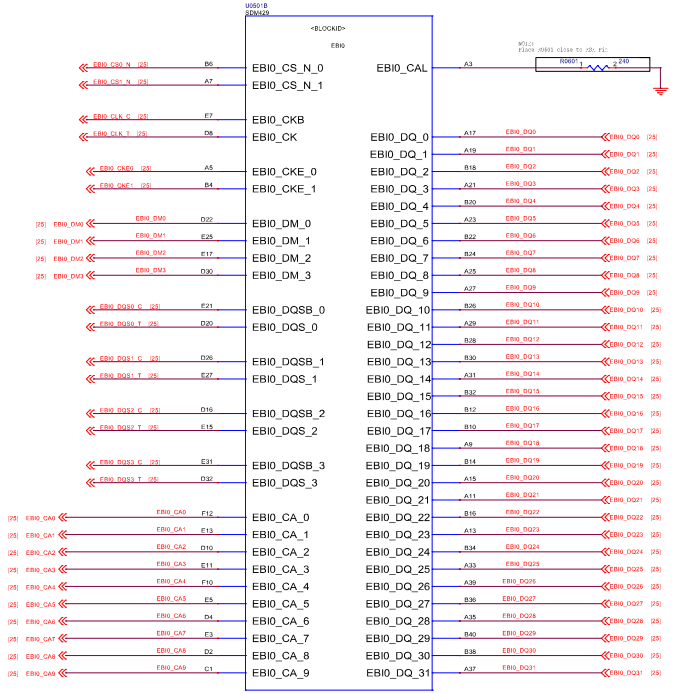

SDM429 EBI

Title	06.SDM429 EBI	REV: V10
DOCUMENT NO.:	89626_1_12 SKUH_MA1 TA1164	Size D
DEPARTMENT:	Wingtech-SZ	DESIGNER: DESIGNER
Date:	Monday, March 25, 2019	Sheet 6 of 82

NOTE:
Asterisks (*) indicate modem power management (MPM) wake-up pins

GPIO_37	WCI-> UART_DBG
GPIO_1	WCI_UART_CTS
GPIO_111	DBG_CONFIG[1]
GPIO_112	DBG_CONFIG[2]
GPIO_44	DBG_CONFIG[3]

DBG_CONFIG[3:1]	DBG_CONFIG
0b000	8'C1 -> 8'C1 -> UART_0
0b001	8'C1 -> 8'C1-> UART_0
0b010	8'C1-> UART_0
0b011	UART_0

Default Boot Config (0b000) is EJC1(mkv2)

I2C PULL-UP RESISTORS

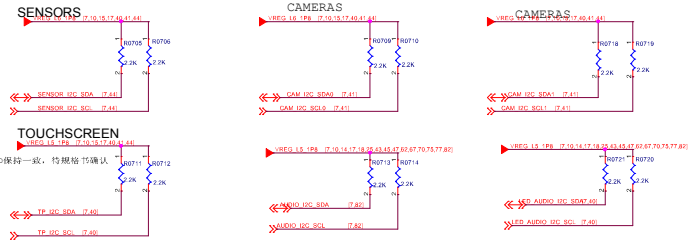

NOTE:
Ensure SW sets these GPIOs (Sensor, CTP and Camera I2C bus) to inout pull down when the peripherals are powered off to eliminate leakage.

SDM429 GPIO

Title	07.SDM429 GPIO	REV: V10
DOCUMENT NO.:	80626_1_12 SKU1_HA1 TA1164	Size D
DEPARTMENT:	Wingtech-SZ	DESIGNER: DESIGNER
Date:	Monday, March 25, 2019	Sheet 7 of 82

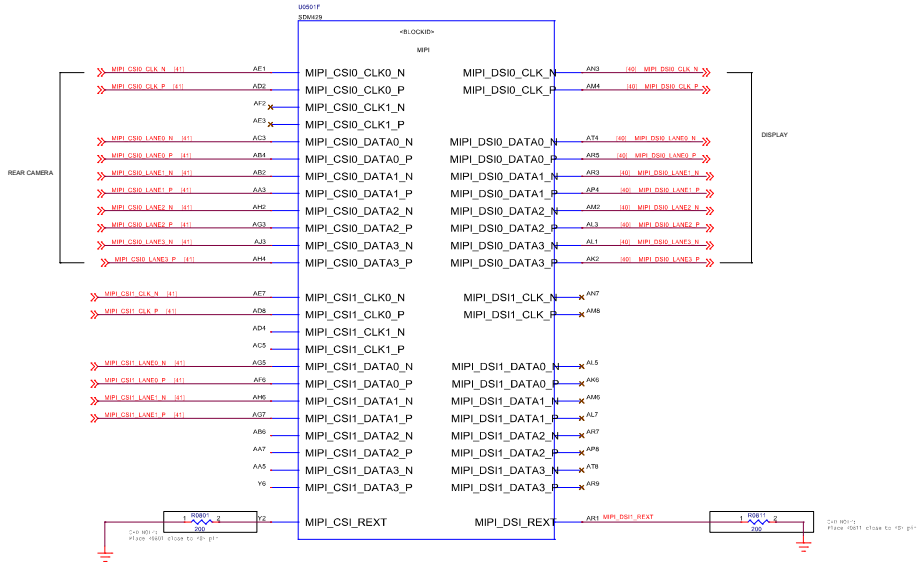

SDM429 MIPI

Title	08.SDM429 MIPI	REV: V10
DOCUMENT NO.:	80626_1_12 SKU1_HA1 TA1164	Size D
DEPARTMENT:	Wingtech-SZ	DESIGNER: DESIGNER
Date:	Monday, March 25, 2019	Sheet 8 of 82

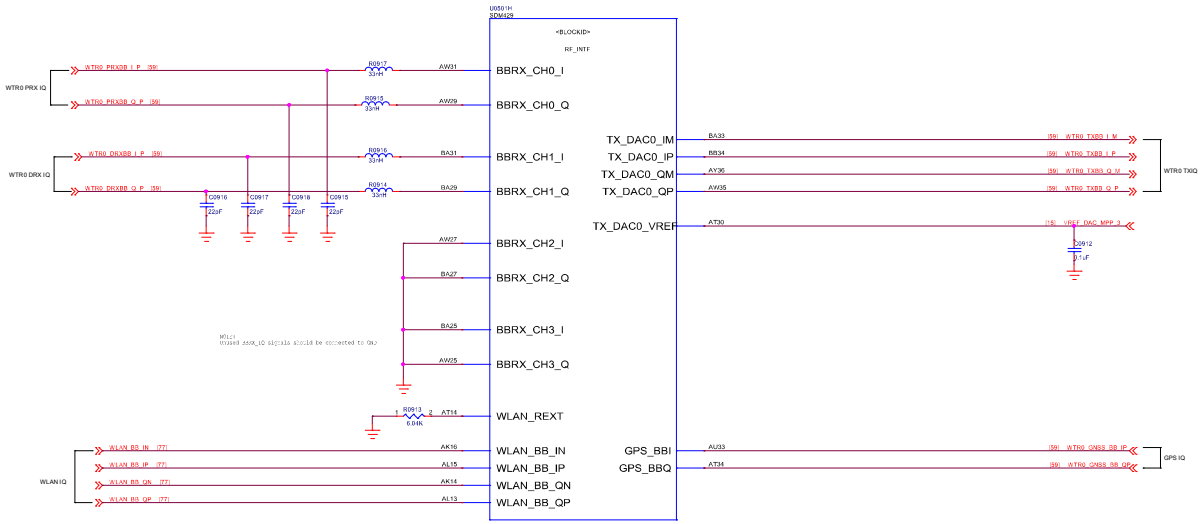

SDM429 RF

Title	09.SDM429 RF	REV: V10
DOCUMENT NO.:	80626_1_12 SKU1_HA1 TA1164	Size D
DEPARTMENT:	Wingtech-SZ	DESIGNER: DESIGNER
Date:	Monday, March 25, 2019	Sheet 9 of 82

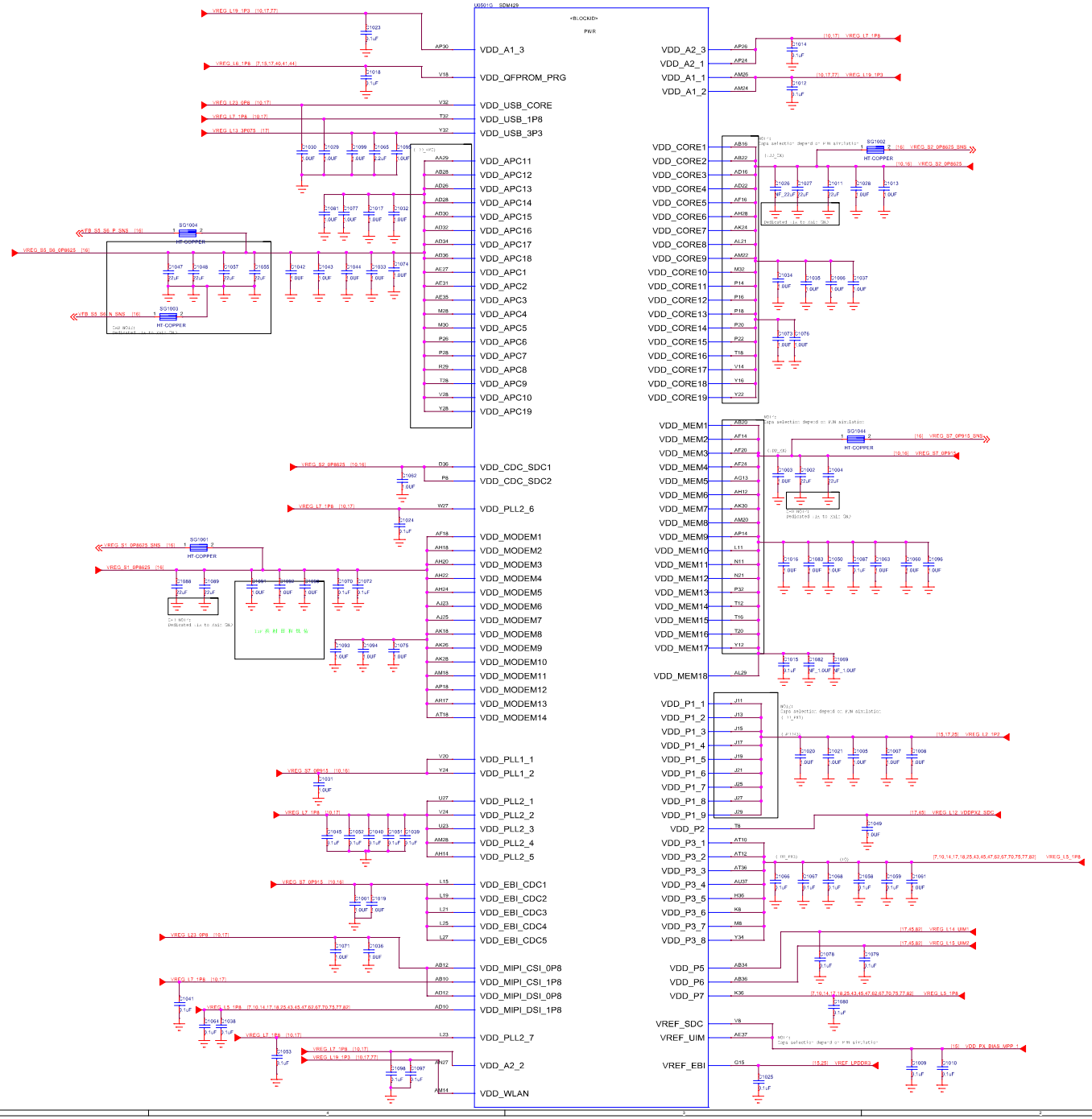

SDM429
POWER1

Title	10.SDM429 POWER1		REV: V10
DOCUMENT NO.:	80626_1_12 SKU1_HA1 TA1164		Size D
DEPARTMENT:	Wingtech-SZ	DESIGNER:	DESIGNER
Date:	Monday, March 25, 2019	Sheet	10 of 82

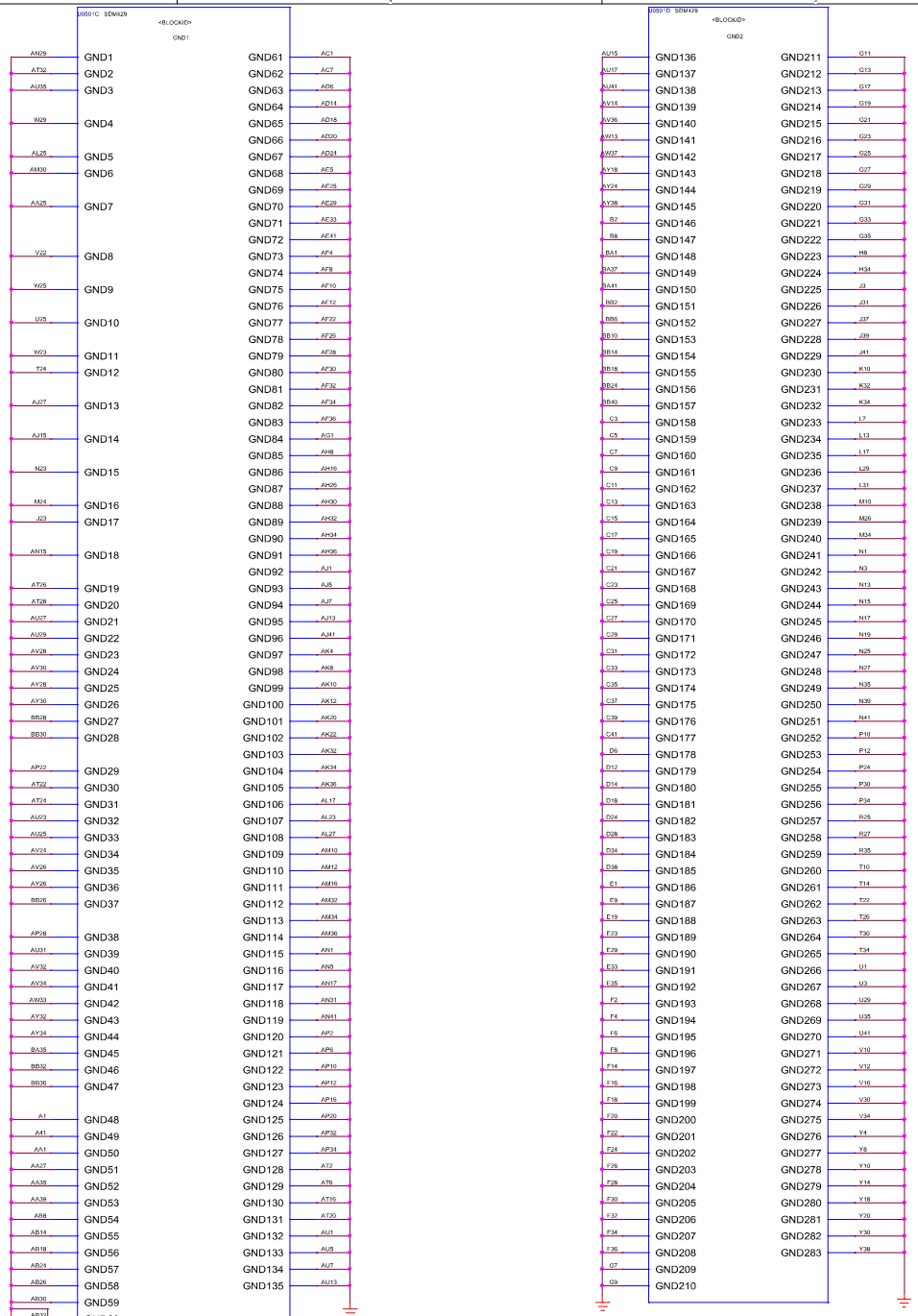

SDM429
GND

Title	12.SDM429 GND		REV: V10
DOCUMENT NO.:	80626_1_12 SKU1_HA1 TA1164		Size D
DEPARTMENT:	Wingtech-SZ	DESIGNER:	DESIGNER
Date:	Monday, March 25, 2019	Sheet	12 of 82

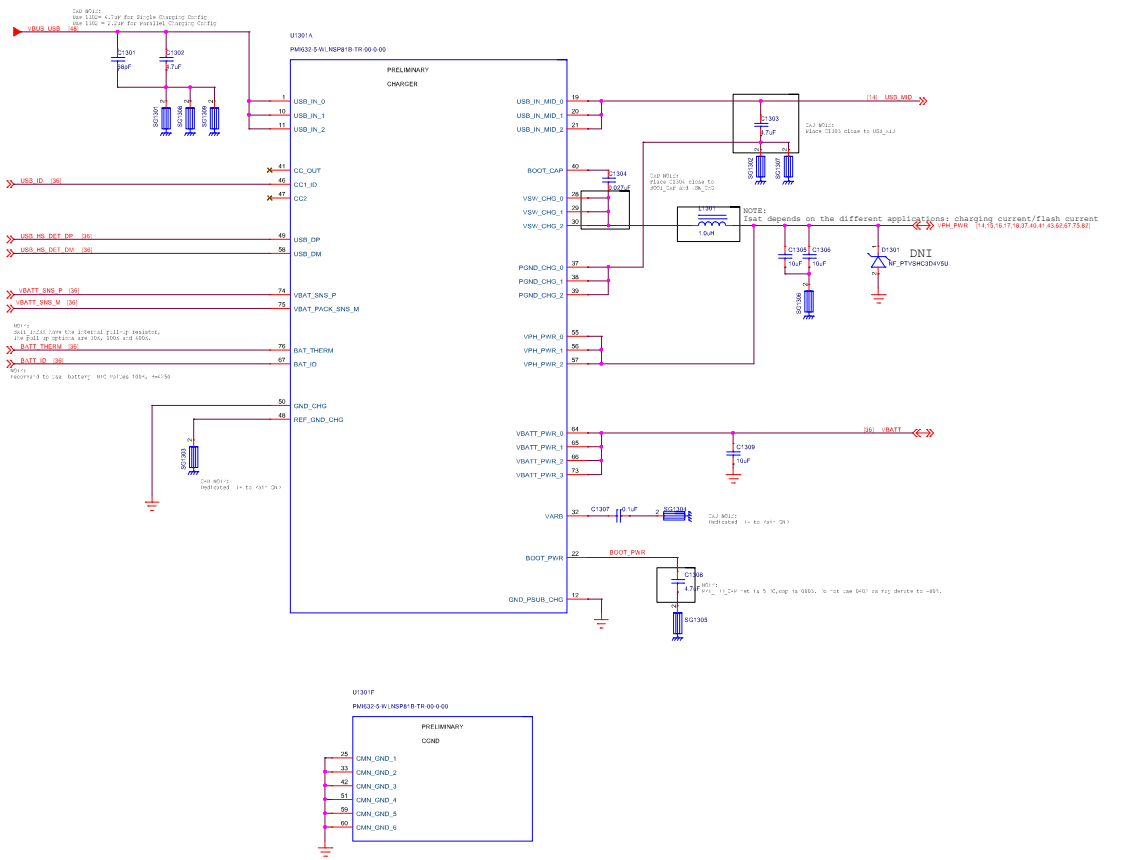

PMI632 Charger

Title	13.PMI632 Charger	REV: V10
DOCUMENT NO.:	80626_1_12 SKU1_HA1 TA1164	Size D
DEPARTMENT:	Wingtech-SZ	DESIGNER: DESIGNER
Date:	Monday, March 25, 2019	Sheet 13 of 82

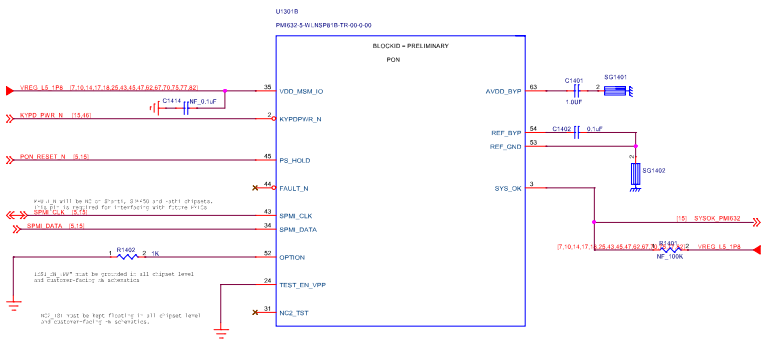

Version	Version Configuration	PU Resistance
1	SPMI, AVDD	1K
2	I2C, AVDD	22K
3	I2C, 1.2pF	510K
	SPMI, 1.2pF	1K

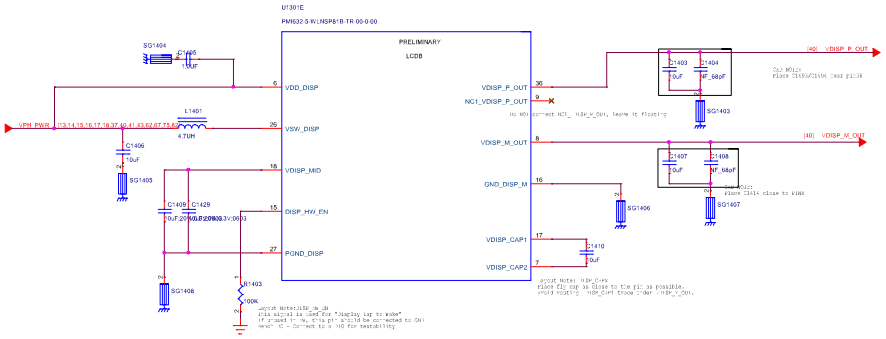

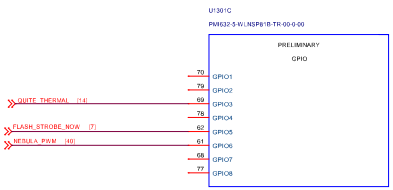

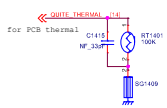

Version	GPIO Function
CHIOD_+VBR (+)	[illegible]
CHIOD_(-)	[illegible]
CHIOD_+VBR (+)	[illegible]
CHIOD_+VBR (+)	[illegible]
CHIOD_(-)	[illegible]
CHIOD_(-)	[illegible]
CHIOD_+VBR (-)	[illegible]
CHIOD_+VBR (-)	[illegible]

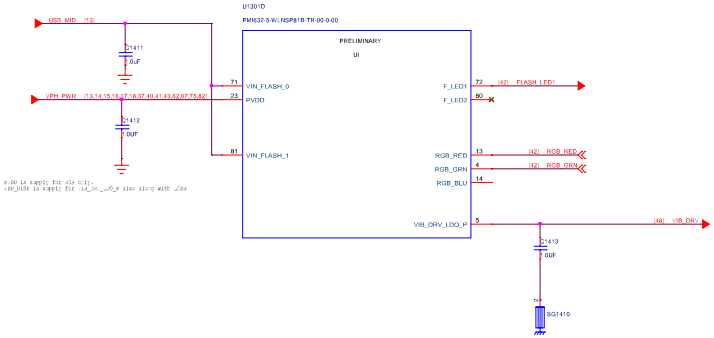

PMI632
Control/Interface

Title	14.PMI632 Control/Interface	REV:	V10
DOCUMENT NO.:	89626_1_12 SKU1_HA1 TA1164	Size	D
DEPARTMENT:	Wingtech-SZ	DESIGNER:	DESIGNER
WINGTECH			
Date:	Monday, March 25, 2019	Sheet	14 of 82

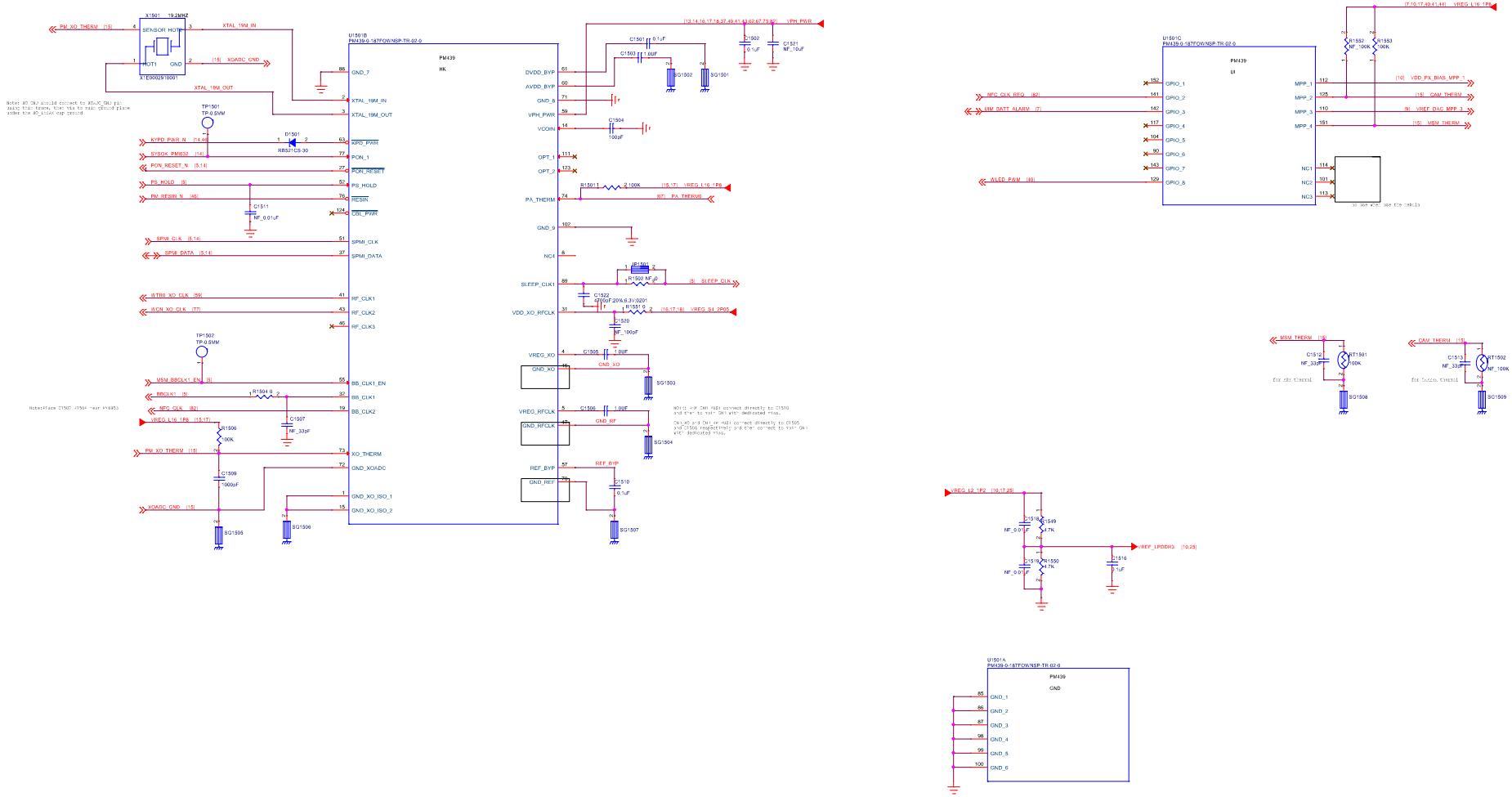

PM439
Control/Interface

Title	15.PM439 Control/Interface	REV: V10
DOCUMENT NO.:	80626_1_12 SKU1_HA1 TA1164	Size: D
DEPARTMENT:	DEPARTMENT	DESIGNER: DESIGNER
Date:	Monday, March 25, 2019	Sheet 15 of 82

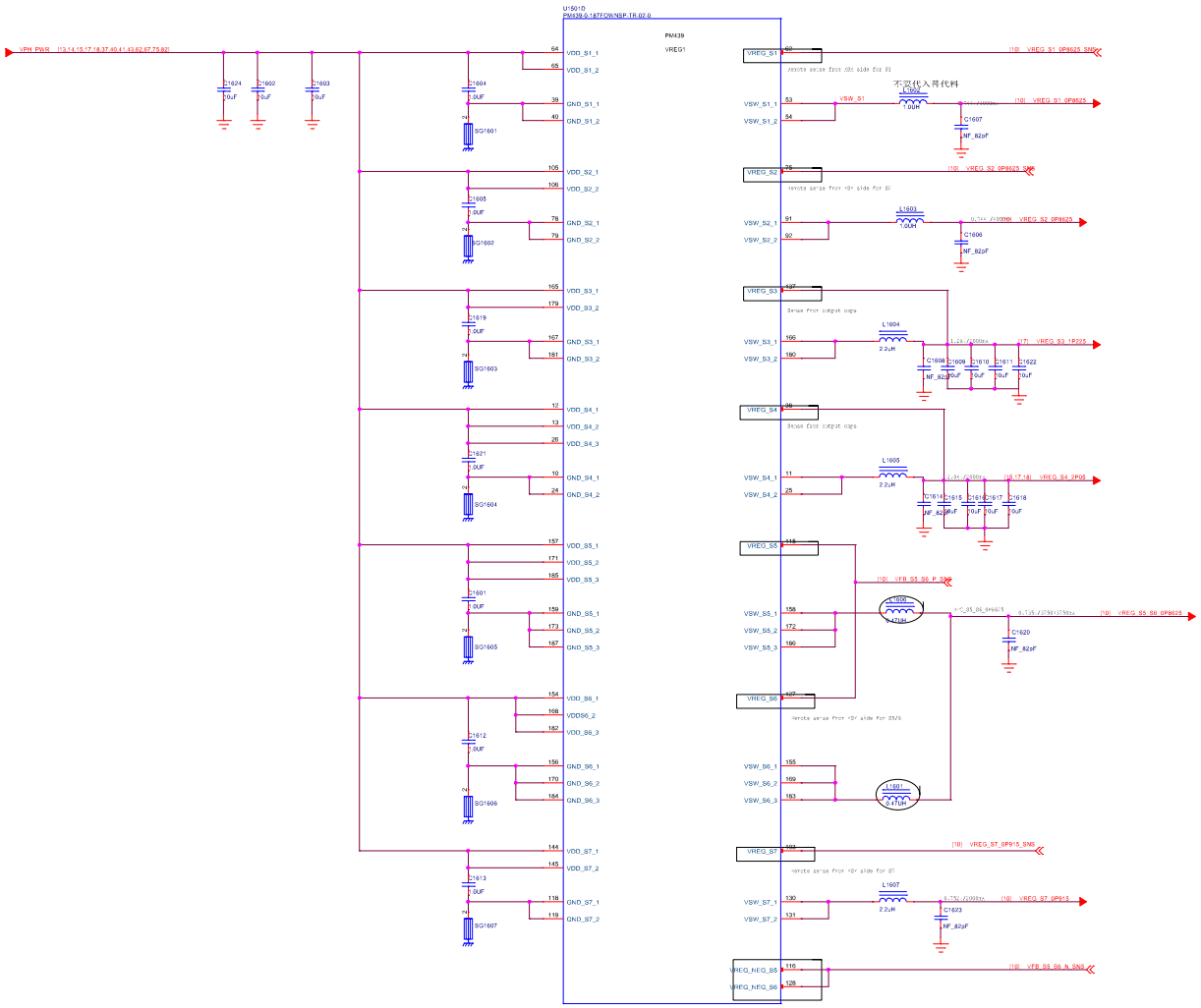

PM439 SMPS

Title	16.PM439 SMPS	REV:	V10
DOCUMENT NO.:	89626_1_12 SKUH_HA1 TA1164	Size	D
DEPARTMENT:	Wingtech-SZ	DESIGNER:	DESIGNER
Date:	Monday, March 25, 2019	Sheet	16 of 82

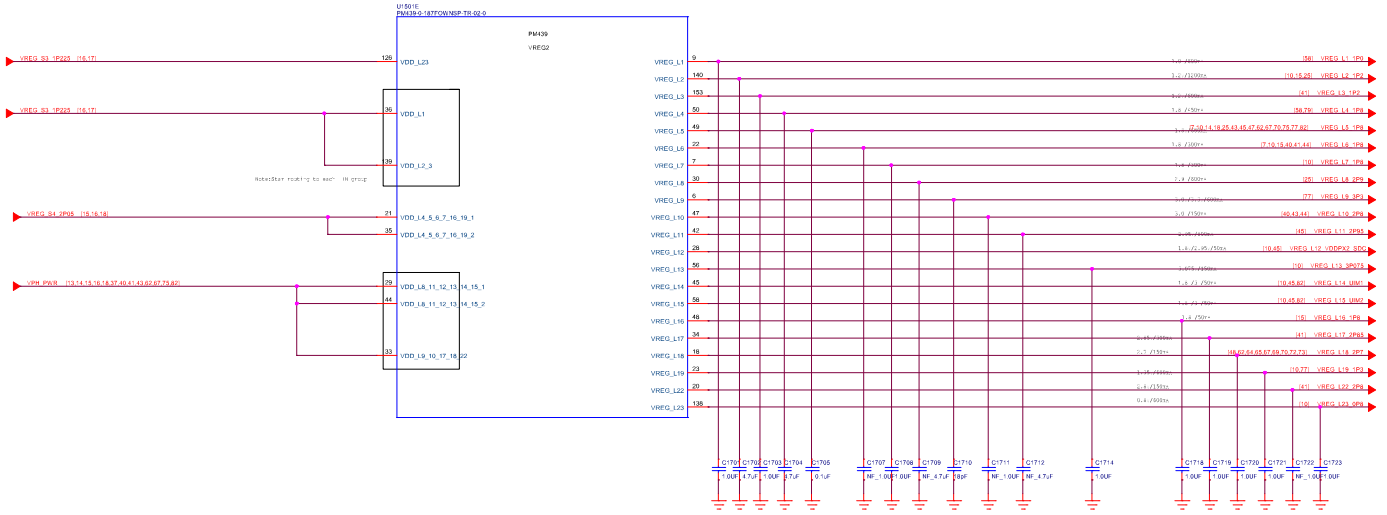

PM439
LDO

Title	17.PM439 LDO		REV: V10
DOCUMENT NO.:	80626_1_12 SKU1_HA1 TA1164		Size D
DEPARTMENT:	Wingtech-SZ	DESIGNER:	DESIGNER
Date:	Monday, March 25, 2019	Sheet	17 of 82

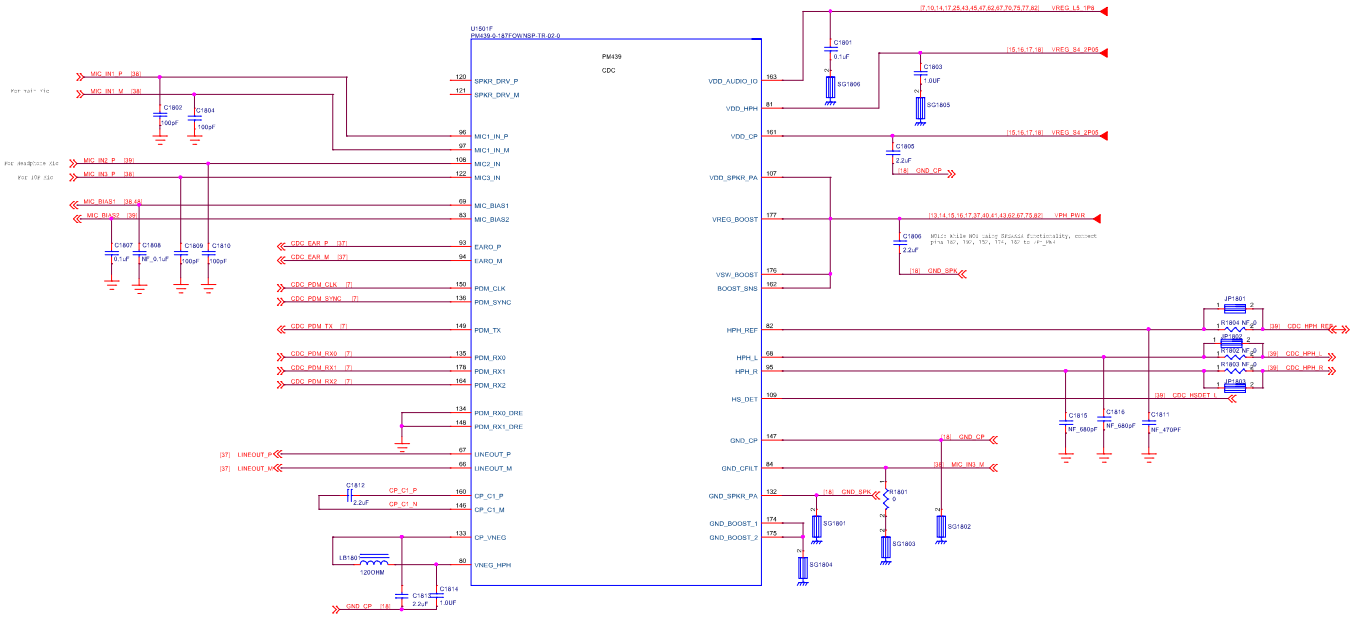

PM439 CODEC/Audio PA

Title	18.PM439 CODEC/Audio PA		REV: V10
DOCUMENT NO.:	80626_1_12 SKU1_HA1 TA1164		Size D
DEPARTMENT:	DEPARTMENT	DESIGNER:	DESIGNER
Date:	Monday, March 25, 2019	Sheet 18	of 82

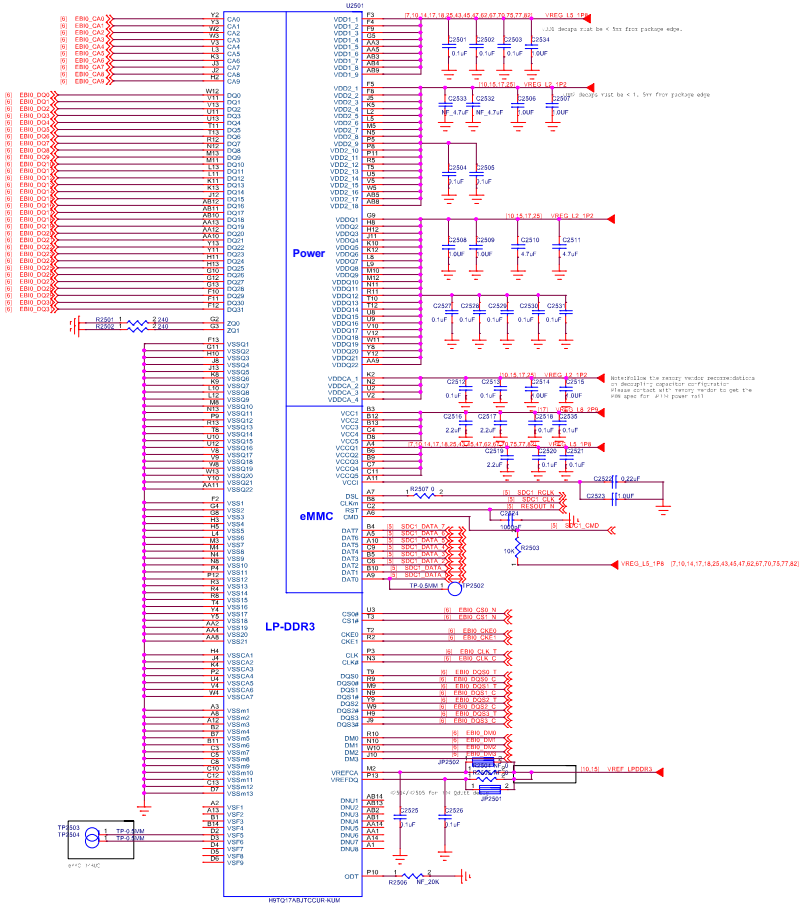

MEMORY(LPDDR3+EMMC V5.1)

Title	25.eMCP		REV: V10
DOCUMENT NO.:	80626_1_12 SKU1_HA1 TA1164		Size D
DEPARTMENT:	Wingtech-SZ	DESIGNER:	DESIGNER
Date:	Monday, March 25, 2019	Sheet	25 of 82

Battery Connector

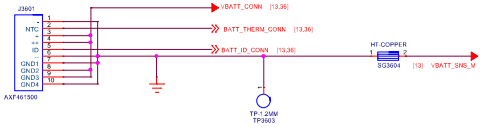

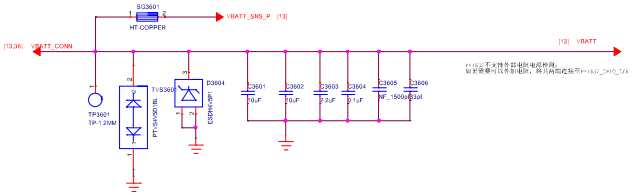
BG3601
HT-COPPER
VBATT_SNS_P [13]
[13,36] VBATT_CONN
[13] VBATT
TP3601
TP-1.2MM
TVS3601
PTVS4V0S1UR
D3604
ESDHC1005P
C3601 10uF
C3602 10uF
C3603 0.1uF
C3604 0.1uF
C3605 NF_1500pF/33pf
C3606

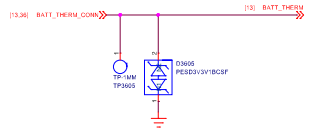
[13,36] BATT_THERM_CONN
[13] BATT_THERM
TP-1MM
TP3605
D3605
PESD3V3V1BCSF

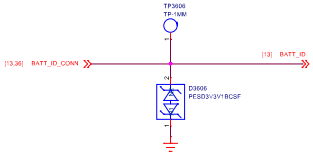
TP3606
TP-1MM
[13,36] BATT_ID_CONN
[13] BATT_ID
D3606
PESD3V3V1BCSF

USB_IF

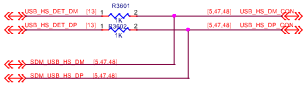
R3601
USB_HS_DET_DM [13]
USB_HS_DET_DP [13]
R3602
1K
[3,47,48] USB_HS_DM_CON
[3,47,48] USB_HS_DP_CON
BDM_USB_HS_DM [3,47,48]
BDM_USB_HS_DP [3,47,48]

[13] USB_ID
R3605
10
USB_ID_CON [47,48]

Battery/USB IF

Title	36.Battery/USB IF	REV: V10
DOCUMENT NO.:	80626_1_12 SKU1_HA1 TA1164	Size D
DEPARTMENT:	Wingtech-SZ	DESIGNER: DESIGNER
Date:	Monday, March 25, 2019	Sheet 36 of 82

AUDIO PA

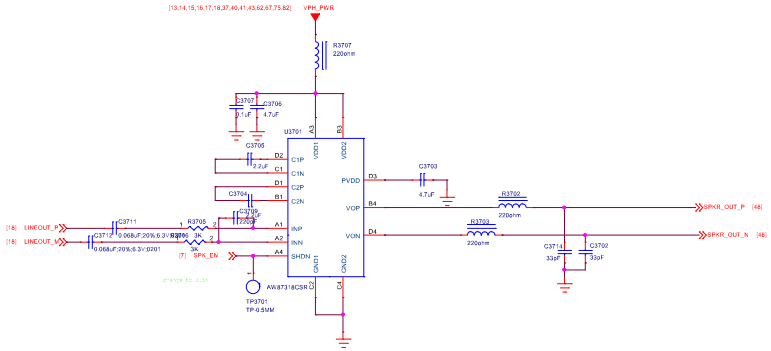

RECEIVER

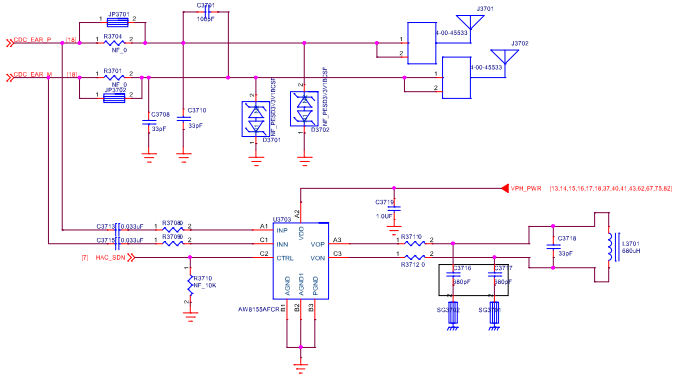

AW8155 FOR HAC

SPK/Receiver/Vibrator

Title	SPK/Receiver/Vibrator	REV: V10
DOCUMENT NO.:	80626_1_12 SKU1_HA1 TA1164	Size D
DEPARTMENT:	Wingtech-SZ	DESIGNER: DESIGNER
Date:	Monday, March 25, 2019	Sheet 37 of 82

Mic2

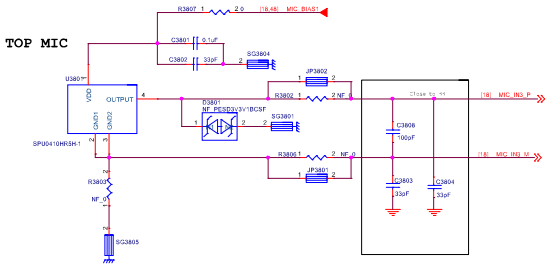

Mic1

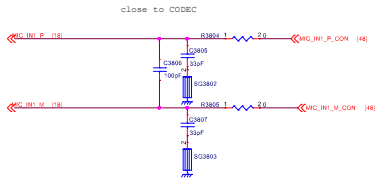

MIC

Title	3B.MIC	REV: V10
DOCUMENT NO.:	80626_1_12 SKU1_HA1 TA1164	Size D
DEPARTMENT:	Wingtech-SZ	DESIGNER: DESIGNER
Date:	Monday, March 25, 2019	Sheet 38 of 82