FCC REPORT
(LTE)

Applicant:	Shenzhen RodinBell Technology Co., Ltd.
Address of Applicant:	905#, Tower B, Xinghe WORLD, Wuhe Avenue, Longgang District, Shenzhen City, PRC
Equipment Under Test (EUT)	
Product Name:	ORCA-50 Handheld Data Terminal
Model No.:	ORCA-50
FCC ID:	2AKQD-ORCA-50
Applicable standards:	FCC CFR Title 47 Part 2 FCC CFR Title 47 Part 24 Subpart E FCC CFR Title 47 Part 22 Subpart H FCC CFR Title 47 Part 27 Subpart L FCC CFR Title 47 Part 27 Subpart H
Date of sample receipt:	19 Dec., 2016
Date of Test:	19 Dec., 2016 to 03 Jan., 2017
Date of report issued:	04 Jan., 2017
Test Result:	PASS*

* In the configuration tested, the EUT complied with the standards specified above.

Authorized Signature:

Bruce Zhang
Laboratory Manager

This report details the results of the testing carried out on one sample. The results contained in this test report do not relate to other samples of the same product and does not permit the use of theCCISproduct certification mark. The manufacturer should ensure that all products in series production are in conformity with the product sample detailed in this report.

This report may only be reproduced and distributed in full. If the product in this report is used in any configuration other than that detailed in the report, the manufacturer must ensure the new system complies with all relevant standards.

This document cannot be reproduced except in full, without prior written approval of the Company. Any unauthorized alteration, forgery orfalsification of the content or appearance of this document is unlawful and offenders may be prosecuted to the fullest extent of the law. Unless otherwise stated the results shown in this test report refer only to the sample(s) tested and such sample(s) are retained for 90 days only.

2. Version

Version No.	Date	Description
00	*04 Jan., 2017*	*Main board with wireless module (FCC ID: QISME909U-523) and same antenna were used by the device, only ERP, EIRP Measurement and Radiated emission were re-tested.*

Tested by:	Carey Chen	***Date:***	*04 Jan., 2017*
	Test Engineer		
Reviewed by:	RYan.Lee	***Date:***	*04 Jan., 2017*
	Project Engineer		

3. Contents

Page

1. COVER PAGE **1**

2. VERSION **2**

3. CONTENTS **3**

4. TEST SUMMARY **4**

5. GENERAL INFORMATION **5**

5.1 CLIENT INFORMATION 5
5.2 GENERAL DESCRIPTION OF E.U.T. 5
5.3 TEST MODES 8
5.4 RELATED SUBMITTAL(S) / GRANT (S) 8
5.5 TEST METHODOLOGY 8
5.6 LABORATORY FACILITY 8
5.7 LABORATORY LOCATION 8
5.8 TEST INSTRUMENTS LIST 9

6. SYSTEM TEST CONFIGURATION **9**

6.1 EUT CONFIGURATION 9
6.2 EUT EXERCISE 9
6.3 CONFIGURATION OF TESTED SYSTEM 10
6.4 DESCRIPTION OF TEST MODES 10
6.5 CONDUCTED OUTPUT POWER 11
6.6 PEAK-TO-AVERAGE RATIO 12
6.7 OCCUPY BANDWIDTH 13
6.8 MODULATION CHARACTERISTIC 14
6.9 OUT OF BAND EMISSION AT ANTENNA TERMINALS 14
6.10 ERP, EIRP MEASUREMENT 15
6.11 FIELD STRENGTH OF SPURIOUS RADIATION MEASUREMENT 29
6.12 FREQUENCY STABILITY V.S. TEMPERATURE MEASUREMENT 49
6.13 FREQUENCY STABILITY V.S. VOLTAGE MEASUREMENT 50

7 TEST SETUP PHOTO **51**

8 EUT CONSTRUCTIONAL DETAILS **52**

4. Test Summary

Test Item	Section in CFR 47	Result
RF Exposure (SAR)	Part 1.1307 Part 2.1093	Passed (Please refer to SAR Report)
RF Output Power	Part 2.1046 Part 24.232 (c) Part 27.50 (c)(10) Part 27.50 (d)(4) Part 22.913 (a)(2)	Pass*
Peak-to-Average Ratio	Part 24.232 (d)	Pass*
Modulation Characteristics	Part 2.1047	Pass*
99% & -26 dB Occupied Bandwidth	Part 2.1049 Part 24.238 Part 27.53(g) Part 27.53(h) Part 22.917(b)	Pass*
Spurious Emissions at Antenna Terminal	Part 2.1051 Part 24.238 (a) Part 27.53 (g) Part 27.53 (h) Part 22.917(a)	Pass*
Field Strength of Spurious Radiation	Part 2.1053 Part 24.238 (a) Part 27.53 (g) Part 27.53 (h) Part 22.917(a)	Pass
Out of band emission, Band Edge	Part 24.238 (a) Part 27.53 (g) Part 27.53 (h) Part 22.917(a)	Pass*
Frequency stability vs. temperature	Part 2.1055(a)(1)(b)	Pass*
Frequency stability vs. voltage	Part 2.1055(d)(1)(2)	Pass*

Pass: The EUT complies with the essential requirements in the standard.

Pass: The test data refer to FCC ID: QISME909U-523.*

5. General Information

5.1 Client Information

Applicant:	Shenzhen RodinBell Technology Co., Ltd.
Address of Applicant:	905#, Tower B, Xinghe WORLD, Wuhe Avenue, Longgang District, Shenzhen City, PRC
Manufacturer:	Shenzhen RodinBell Technology Co., Ltd.
Address of Manufacturer:	905#, Tower B, Xinghe WORLD, Wuhe Avenue, Longgang District, Shenzhen City, PRC

5.2 General Description of E.U.T.

Product Name:	ORCA-50 Handheld Data Terminal
Model No.:	ORCA-50
Operation Frequency range:	LTE Band 2: TX: 1850MHz-1910MHz, RX: 1930MHz-1990MHz LTE Band 4:TX: 1710MHz-1755MHz, RX: 2110MHz-2155MHz LTE Band 5:TX: 824MHz-849MHz, RX: 869MHz-894MHz LTE Band 17: TX: 704MHz -716MHz, RX: 734MHz-746MHz
Modulation type:	QPSK, 16QAM
Antenna type:	Internal Antenna
Antenna gain:	LTE Band 2: 0dBi LTE Band 4: 0dBi LTE Band 5: 0dBi LTE Band 17: 0dBi
AC adapter:	Model: HKC0115020-2B Input: AC100-240V 50/60Hz 0.5A Output: DC 5.0V, 2A
Power supply:	Rechargeable Li-ion Battery DC3.7V-6000mAh

Regards to the operating frequency range, the lowest frequency, the middle frequency, and the highest frequency of channel were selected to perform the test, and the selected channels as below:

LTE Band 2(1.4MHz)			LTE Band 2(3MHz)		
Channel		Frequency (MHz)	Channel		Frequency (MHz)
Lowest channel	18607	1850.70	Lowest channel	18615	1851.50
Middle channel	18900	1880.00	Middle channel	18900	1880.00
Highest channel	19193	1909.30	Highest channel	19185	1908.50
LTE Band 2(5MHz)			LTE Band 2(10MHz)		
Channel		Frequency (MHz)	Channel		Frequency (MHz)
Lowest channel	18625	1852.50	Lowest channel	18650	1855.00
Middle channel	18900	1880.00	Middle channel	18900	1880.00
Highest channel	19175	1907.50	Highest channel	19150	1905.00
LTE Band 2(15MHz)			LTE Band 2(20MHz)		
Channel		Frequency (MHz)	Channel		Frequency (MHz)
Lowest channel	18675	1857.50	Lowest channel	18700	1860.00
Middle channel	18900	1880.00	Middle channel	18900	1880.00
Highest channel	19125	1902.50	Highest channel	19100	1900.00

LTE Band 4(1.4MHz)			LTE Band 4(3MHz)		
Channel:		Frequency (MHz)	Channel		Frequency (MHz)
Lowest channel	19957	1710.70	Lowest channel	19965	1711.50
Middle channel	20175	1732.50	Middle channel	20175	1732.50
Highest channel	20393	1754.30	Highest channel	20385	1753.50
LTE Band 4(5MHz)			LTE Band 4(10MHz)		
Channel		Frequency (MHz)	Channel		Frequency (MHz)
Lowest channel	19975	1712.50	Lowest channel	20000	1715.00
Middle channel	20175	1732.50	Middle channel	20175	1732.50
Highest channel	20375	1752.50	Highest channel	20350	1750.00
LTE Band 4(15MHz)			LTE Band 4(20MHz)		
Channel		Frequency (MHz)	Channel		Frequency (MHz)
Lowest channel	20025	1717.50	Lowest channel	20050	1720.00
Middle channel	20175	1732.50	Middle channel	20175	1732.50
Highest channel	20325	1747.50	Highest channel	20300	1745.00

LTE Band 5(1.4MHz)			LTE Band 5(3MHz)		
Channel		Frequency (MHz)	Channel		Frequency (MHz)
Lowest channel	20407	824.70	Lowest channel	20415	825.50
Middle channel	20525	836.50	Middle channel	20525	836.50
Highest channel	20643	848.30	Highest channel	20635	847.50
LTE Band 5(5MHz)			LTE Band 5(10MHz)		
Channel		Frequency (MHz)	Channel		Frequency (MHz)
Lowest channel	20425	826.50	Lowest channel	20450	829.00
Middle channel	20525	836.50	Middle channel	20525	836.50
Highest channel	20625	846.50	Highest channel	20600	844.00

LTE Band 17(5MHz)			LTE Band 17(10MHz)		
Channel		Frequency (MHz)	Channel		Frequency (MHz)
Lowest channel	23755	706.50	Lowest channel	23780	709.00
Middle channel	23790	710.00	Middle channel	23790	710.00
Highest channel	23825	713.50	Highest channel	23800	711.00

5.3 Test modes

Data mode (LTE band 2(QPSK))	Keep the EUT in data communicating mode on LTE band 2(QPSK). *(LTE band2(1.4MHz), LTE band2(3MHz), LTE band2(5MHz), LTE band2(10MHz), LTE band2(15MHz), LTE band2(20MHz))*
Data mode (LTE band 2(16QAM))	Keep the EUT in data communicating mode on LTE band 2(16QAM). *(LTE band2(1.4MHz), LTE band2(3MHz), LTE band2(5MHz), LTE band2(10MHz), LTE band2(15MHz), LTE band2(20MHz))*
Data mode (LTE band 4(QPSK))	Keep the EUT in data communicating mode on LTE band 4(QPSK). *(LTE band 4(1.4MHz), LTE band 4(3MHz), LTE band 4(5MHz), LTE band 4(10MHz), LTE band 4(15MHz), LTE band 4(20MHz))*
Data mode (LTE band 4(16QAM))	Keep the EUT in data communicating mode on LTE band 4(16QAM). *(LTE band 4(1.4MHz), LTE band 4(3MHz), LTE band 4(5MHz), LTE band 4(10MHz), LTE band 4(15MHz), LTE band 4(20MHz))*
Data mode (LTE band 5(QPSK))	Keep the EUT in data communicating mode on LTE band 7(QPSK). *(LTE band7(5MHz), LTE band 7(10MHz), LTE band 7(15MHz), LTE band 7(20MHz))*
Data mode (LTE band 5(16QAM))	Keep the EUT in data communicating mode on LTE band 7(16QAM).*(LTE band7(5MHz), LTE band7(10MHz), LTE band 7(15MHz), LTE band 7(20MHz))*
Data mode (LTE band 17(QPSK))	Keep the EUT in data communicating mode on LTE band17(QPSK). *(LTE band17(5MHz), LTE band17(10MHz))*
Data mode (LTE band 17(16QAM))	Keep the EUT in data communicating mode on LTE band 17(16QAM).*(LTE band17(5MHz), LTE band17(10MHz))*
Remark :	Just the worst case data were shown in the report.

5.4 Related Submittal(s) / Grant (s)

This submittal(s) (test report) is filing to comply with Section Part 24 subpart E, Part 27 subpart L, Part 22 Subpart H, Part 27 subpart H and Part 90 subpart S of the FCC CFR 47 Rules.

5.5 Test Methodology

Both conducted and radiated testing were performed according to the procedures document on TIA/EIA 603 and FCC CFR 47clause 2.1046, 2.1047, 2.1049, 2.1051, 2.1053, 2.1055 and 2.1057

5.6 Laboratory Facility

The test facility is recognized, certified, or accredited by the following organizations:

●FCC - Registration No.: 817957

Shenzhen ZhongjianNanfang Testing Co., Ltd. EMC Laboratory has been registered and fully described in a report filed with the (FCC) Federal Communications Commission. The acceptance letter from the FCC is maintained in out files. Registration 817957, February 27, 2012.

●IC - Registration No.: 10106A-1

The 3m Semi-anechoic chamber of Shenzhen ZhongjianNanfang Testing Co., Ltd. has been Registered by Certification and Engineering Bureau of Industry Canada for radio equipment testing with Registration No.: 10106A-1.

●CNAS - Registration No.: CNAS L6048

Shenzhen ZhongjianNanfang Testing Co., Ltd. is accredited to ISO/IEC 17025:2005 General Requirements for the Competence of Testing and Calibration laboratories for the competence of testing. The Registration No. is CNAS L6048.

5.7 Laboratory Location

Shenzhen ZhongjianNanfang Testing Co., Ltd.
Address: No.B-C, 1/F., Building 2, Laodong No.2 Industrial Park, Xixiang Road,
Bao'an District, Shenzhen, Guangdong, China
Tel: +86-755-23118282
Fax: +86-755-23116366

5.8 Test Instruments list

Test Equipment	Manufacturer	Model No.	Inventory No.	Cal. Date (mm-dd-yy)	Cal. Due date (mm-dd-yy)
3m Semi- Anechoic Chamber	SAEMC	9(L)*6(W)* 6(H)	CCIS0001	08-23-2014	08-22-2017
BiConiLog Antenna	SCHWARZBECK MESS-ELEKTRONIK	VULB9163	CCIS0005	03-25-2016	03-25-2017
Double -ridged waveguide horn	SCHWARZBECK MESS-ELEKTRONIK	BBHA9120D	CCIS0006	03-25-2016	03-25-2017
EMI Test Software	AUDIX	E3	N/A	N/A	N/A
Amplifier (10kHz-1.3GHz)	HP	8447D	CCIS0003	04-01-2016	03-31-2017
Amplifier (1GHz-18GHz)	Compliance Direction Systems Inc.	PAP-1G18	CCIS0011	04-01-2016	03-31-2017
Pre-amplifier (18-26GHz)	Rohde & Schwarz	AFS33-18002 650-30-8P-44	GTS218	04-01-2016	03-31-2017
Horn Antenna	ETS-LINDGREN	3160	GTS217	04-01-2016	03-31-2017
Printer	HP	HP LaserJet P1007	N/A	N/A	N/A
Positioning Controller	UC	UC3000	CCIS0015	N/A	N/A
Spectrum analyzer 9k-30GHz	Rohde & Schwarz	FSP 30	CCIS0023	03-28-2016	03-28-2017
EMI Test Receiver	Rohde & Schwarz	ESPI	CCIS0022	03-28-2016	03-28-2017
EMI Test Receiver	Rohde & Schwarz	ESRP7	CCIS0167	03-24-2016	03-24-2017
Loop antenna	Laplace instrument	RF300	EMC0701	04-01-2016	03-31-2017
Universal radio communication tester	Rhode & Schwarz	CMU200	CCIS0069	03-28-2016	03-28-2017
Signal Analyzer	Rohde & Schwarz	FSIQ3	CCIS0088	04-08-2016	04-08-2017
DC Power Supply	Shenzhen XinNuoEr Technologies Co., Ltd.	WYK-10020K	CCIS0201	10-31-2015	10-30-2016
Temperature Humidity Chamber	Fo Shan HengPu Electronics Co., Ltd.	HPGDS-500	CCIS0240	11-18-2015	11-27-2016

6. System test configuration

6.1 EUT Configuration

The EUT configuration for testing is installed on RF field strength measurement to meet the commission's requirement and operating in a manner which intends to maximize its emission characteristics in a continuous normal application.

6.2 EUT Exercise

The EUT (Transmitter) was operated in the engineering mode to fix the Tx frequency which was for the purpose of the measurements.

6.3 Configuration of Tested System

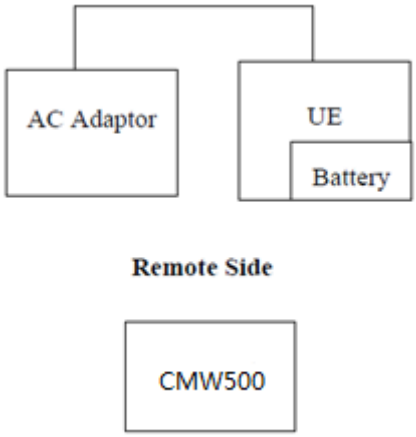

6.4 Description of Test Modes

The EUT has been tested under operating condition.
EUT staying in continuous transmitting mode. Channel Low, Mid and High for each type band with rated data rate were chosen for full testing.
The field strength of spurious radiation emission was measured as EUT stand-up position (H mode) and lie down position (E1, E2 mode) for three modes (LTE Band 2, LTE Band 4, LTE Band 5 and LTE Band 17) with power adaptor, earphone and Data cable. The worst-case H mode for LTE Band 2, LTE Band 4, LTE Band 5 and LTE Band 17.

6.5 Conducted Output Power

Test Requirement:	Part 24.232 (c), part 27.50(c), part 27.50(d), Part 22.913 (a)(2)
Test Method:	FCC part2.1046
Limit:	LTE Band 2: 2W LTE Band 4: 1W LTE Band 5: 7W LTE Band 17: 3W
Test setup:	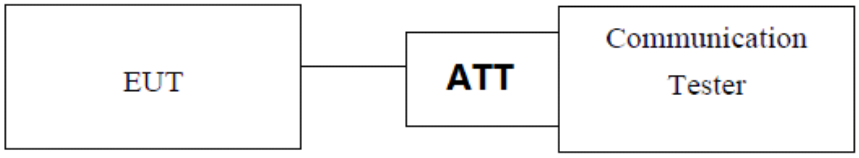 *Note: Measurement setup for testing on Antenna connector*
Test Procedure:	The transmitter output was connected to a calibrated attenuator, the other end of which was connected to the CMW500. Transmitter output power was read off in dBm.
Test Instruments:	Refer to section 5.8 for details
Test mode:	Refer to section 5.3 for details
Test results:	Refer to FCC ID: QISME909U-523

6.6 Peak-to-Average Ratio

Test Requirement:	FCC part 24.232(d)
Limit:	The peak-to-average ratio (PAR) of the transmission may not exceed 13 dB.
Test setup:	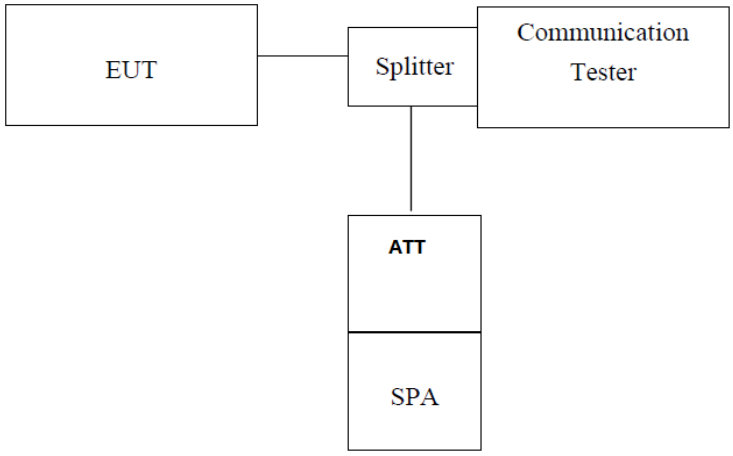 ***Note:*** *Measurement setup for testing on Antenna connector*
Test Procedure:	1 The RF output of the transceiver was connected to a spectrum analyzer through appropriate attenuation. 2 Set the CCDF option in spectrum analyzer, RBW ≥ OBW, 3 Set the EUT working in highest power level, measured and recorded the 0.1% as PAPR level. 4 Repeat step 1~3 at other frequency and modulations.
Test Instruments:	Refer to section 5.8 for details
Test mode:	Refer to section 5.3 for details
Test results:	Refer to FCC ID: QISME909U-523

6.7 Occupy Bandwidth

Test Requirement:	Part 24.238, part 27.53(g), part 27.53(h), Part 22.917(b)
Test Method:	FCC part2.1049
Test setup:	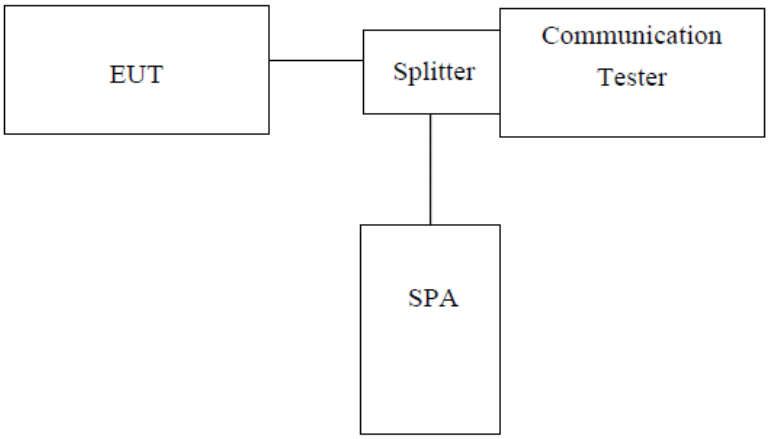 *Note: Measurement setup for testing on Antenna connector*
Test Procedure:	1. The EUT's output RF connector was connected with a short cable to the spectrum analyzer 2. RBW was set to about 1% ~ 5% of emission BW, VBW= 3 times RBW. 3. -26dBc display line was placed on the screen (or 99% bandwidth), the occupied bandwidth is the delta frequency between the two points where the display line intersects the signal trace.
Test Instruments:	Refer to section 5.8 for details
Test mode:	Refer to section 5.3 for details
Test results:	Refer to FCC ID: QISME909U-523

6.8 Modulation Characteristic

According to FCC § 2.1047(d), Part 24E & 27H & 27L & 22H there is no specific requirement for digital modulation, therefore modulation characteristic is not presented.

6.9 Out of band emission at antenna terminals

Test Requirement:	Part 24.238 (a), part 27.53(g), part 27.53(h), Part 22.917(a)
Test Method:	FCC part2.1051
Limit:	-13dBm
Test setup:	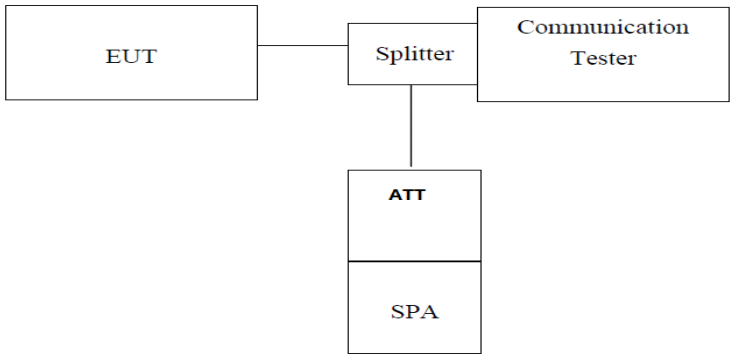 ***Note:*** *Measurement setup for testing on Antenna connector*
Test Procedure:	1 The RF output of the transceiver was connected to a spectrum analyzer through appropriate attenuation. 2 The resolution bandwidth of the spectrum analyzer was set at 100 kHz when below 1GHz, 1MHz when above 1 GHz; sufficient scans were taken to show the out of band Emissions if any up to 10th harmonic. 3 For the out of band: Set the RBW=100 kHz, VBW=300 kHz when below 1 GHz, RBW =1 MHz, VBW=3 MHz when above 1 GHz, Start=30MHz, Stop= 10th harmonic. 4 Band Edge Requirements: In the 1 MHz bands immediately outside and adjacent to the frequency block, a resolution bandwidth of at least 1 percent of the emission bandwidth of the fundamental emission of the transmitter may be employed to measure the out of band Emissions.
Test Instruments:	Refer to section 5.8 for details
Test mode:	Refer to section 5.3 for details
Test results:	Refer to FCC ID: QISME909U-523

6.10 ERP, EIRP Measurement

Test Requirement:	24.232 (c), part 27.50(c), part 27.50(d) , Part 22.917(a),
Test Method:	FCC part2.1046
Limit:	LTE Band 2: 2W EIRP LTE Band 4: 1W EIRP LTE Band 5: 7W ERP LTE Band 17: 3W ERP
Test setup:	Below 1GHz 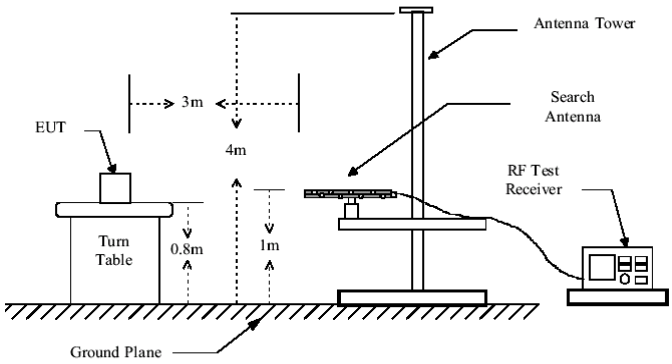 Above 1GHz 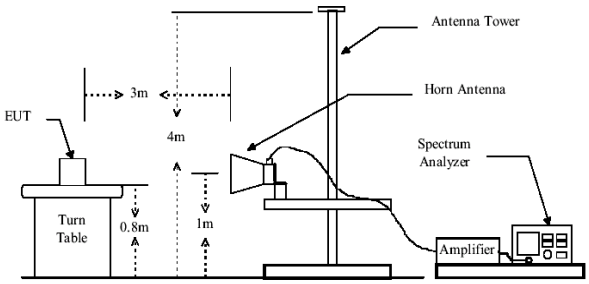 Substituted method: 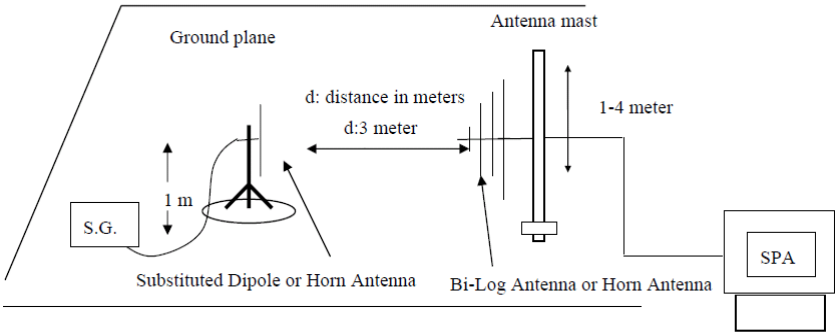

Test Procedure:	1. The EUT was placed on an non-conductive turntable using a non-conductive support. The radiated emission at the fundamental frequency was measured at 3 m with a test antenna and EMI spectrum analyzer. 2. During the measurement, the EUT was communication with the station. The highest emission was recorded with the rotation of the turntable and the lowering of the test antenna from 4m to 1m. The reading was recorded and the field strength (E in dBuV/m) was calculated. 3. ERP in frequency band below 1GHz were measured using a substitution method. The EUT was replaced by dipole antenna connected, the S.G. output was recorded and ERP was calculated as follows: ERP = S.G. output (dBm) + Antenna Gain (dBd) – Cable Loss (dB) 4. EIRP in frequency band above 1GHz were measured using a substitution method. The EUT was replaced by or horn antenna connected, the S.G. output was recorded and EIRP was calculated as follows: EIRP = S.G. output (dBm) + Antenna Gain (dBi) – Cable Loss (dB) 5. The worse case was relating to the conducted output power.
Test Instruments:	Refer to section 5.8 for details
Test mode:	Refer to section 5.3 for details
Test results:	Passed

Measurement Data (worst case):

LTE band 2 part

Lowest channel

Frequency (MHz)	UL Channel	Modulation	BW (MHz)	EUT Pol.	Antenna Pol.	EIRP(dBm)	Limit (dBm)	Result
1.4MHz(RB size 1 & RB offset 0)								
1850.70	18607	QPSK	1.4	H	V	17.01	33.00	Pass
					H	21.00		
1850.70	18607	16QAM	1.4	H	V	16.71		
					H	19.61		
1.4MHz(RB size 3 & RB offset 0)								
1850.70	18607	QPSK	1.4	H	V	17.03	33.00	Pass
					H	21.37		
1850.70	18607	16QAM	1.4	H	V	16.42		
					H	19.64		
1.4MHz(RB size 6 & RB offset 0)								
1850.70	18607	QPSK	1.4	H	V	17.56	33.00	Pass
					H	21.31		
1850.70	18607	16QAM	1.4	H	V	16.40		
					H	19.41		

Middle channel

Frequency (MHz)	UL Channel	Modulation	BW (MHz)	EUT Pol.	Antenna Pol.	EIRP(dBm)	Limit (dBm)	Result
1.4MHz(RB size 1 & RB offset 0)								
1880.00	18900	QPSK	1.4	H	V	17.41	33.00	Pass
					H	21.74		
1880.00	18900	16QAM	1.4	H	V	16.99		
					H	19.32		
1.4MHz(RB size 3 & RB offset 0)								
1880.00	18900	QPSK	1.4	H	V	17.12	33.00	Pass
					H	21.99		
1880.00	18900	16QAM	1.4	H	V	16.20		
					H	19.13		
1.4MHz(RB size 6 & RB offset 0)								
1880.00	18900	QPSK	1.40	H	V	17.57	33.00	Pass
					H	21.72		
1880.00	18900	16QAM	1.40	H	V	16.40		
					H	19.11		

Highest channel

Frequency (MHz)	UL Channel	Modulation	BW (MHz)	EUT Pol.	Antenna Pol.	EIRP(dBm)	Limit (dBm)	Result
1.4MHz(RB size 1 & RB offset 0)								
1909.30	19193	QPSK	1.4	H	V	17.41	33.00	Pass
					H	21.39		
1909.30	19193	16QAM	1.4	H	V	16.47		
					H	19.17		
1.4MHz(RB size 3 & RB offset 0)								
1909.30	19193	QPSK	1.4	H	V	17.74	33.00	Pass
					H	21.32		
1909.30	19193	16QAM	1.4	H	V	16.32		
					H	19.12		
1.4MHz(RB size 6 & RB offset 0)								
1909.30	19193	QPSK	1.4	H	V	17.64	33.00	Pass
					H	21.39		
1909.30	19193	16QAM	1.4	H	V	16.74		
					H	19.31		

Lowest channel

Frequency (MHz)	UL Channel	Modulation	BW (MHz)	EUT Pol.	Antenna Pol.	EIRP(dBm)	Limit (dBm)	Result
20MHz(RB size 1 & RB offset 0)								
1860.00	18700	QPSK	20	H	V	16.99	33.00	Pass
					H	19.90		
1860.00	18700	16QAM	20	H	V	16.81		
					H	19.84		
20MHz(RB size 50 & RB offset 0)								
1860.00	18700	QPSK	20	H	V	16.21	33.00	Pass
					H	19.18		
1860.00	18700	16QAM	20	H	V	16.21		
					H	19.19		
20MHz(RB size 100 & RB offset 0)								
1860.00	18700	QPSK	20	H	V	16.37	33.00	Pass
					H	19.19		
1860.00	18700	16QAM	20	H	V	16.39		
					H	19.17		

Middle channel

Frequency (MHz)	UL Channel	Modulation	BW (MHz)	EUT Pol.	Antenna Pol.	EIRP(dBm)	Limit (dBm)	Result
20MHz(RB size 1 & RB offset 0)								
1880.00	18900	QPSK	20	H	V	16.37	33.00	Pass
					H	19.74		
1880.00	18900	16QAM	20	H	V	16.38		
					H	19.12		
20MHz(RB size 50 & RB offset 0)								
1880.00	18900	QPSK	20	H	V	16.64	33.00	Pass
					H	19.41		
1880.00	18900	16QAM	20	H	V	16.44		
					H	19.28		
20MHz(RB size 100 & RB offset 0)								
1880.00	18900	QPSK	20	H	V	16.47	33.00	Pass
					H	19.44		
1880.00	18900	16QAM	20	H	V	16.31		
					H	19.56		

Highest channel

Frequency (MHz)	UL Channel	Modulation	BW (MHz)	EUT Pol.	Antenna Pol.	EIRP(dBm)	Limit (dBm)	Result
20MHz(RB size 1 & RB offset 0)								
1900.00	19100	QPSK	20	H	V	16.36	33.00	Pass
					H	19.65		
1900.00	19100	16QAM	20	H	V	16.24		
					H	19.28		
20MHz(RB size 50 & RB offset 0)								
1900.00	19100	QPSK	20	H	V	16.25	33.00	Pass
					H	19.36		
1900.00	19100	16QAM	20	H	V	16.57		
					H	19.57		
20MHz(RB size 100 & RB offset 0)								
1900.00	19100	QPSK	20	H	V	16.57	33.00	Pass
					H	19.31		
1900.00	19100	16QAM	20	H	V	16.47		
					H	19.63		

LTE band 4 part

Lowest channel

Frequency (MHz)	UL Channel	Modulation	BW (MHz)	EUT Pol.	Antenna Pol.	EIRP(dBm)	Limit (dBm)	Result
1.4MHz(RB size 1 & RB offset 0)								
1710.70	19957	QPSK	1.4	H	V	23.64	30.00	Pass
					H	16.74		
1710.70	19957	16QAM	1.4	H	V	22.65		
					H	15.80		
1.4MHz(RB size 3 & RB offset 0)								
1710.70	19957	QPSK	1.4	H	V	23.16	30.00	Pass
					H	16.64		
1710.70	19957	16QAM	1.4	H	V	22.46		
					H	15.69		
1.4MHz(RB size 6 & RB offset 0)								
1710.70	19957	QPSK	1.4	H	V	23.37	30.00	Pass
					H	16.54		
1710.70	19957	16QAM	1.4	H	V	22.37		
					H	15.39		

Middle channel

Frequency (MHz)	UL Channel	Modulation	BW (MHz)	EUT Pol.	Antenna Pol.	EIRP(dBm)	Limit (dBm)	Result
1.4MHz(RB size 1 & RB offset 0)								
1732.50	20175	QPSK	1.4	H	V	23.24	30.00	Pass
					H	16.37		
1732.50	20175	16QAM	1.4	H	V	22.41		
					H	15.37		
1.4MHz(RB size 3 & RB offset 0)								
1732.50	20175	QPSK	1.4	H	V	23.37	30.00	Pass
					H	16.41		
1732.50	20175	16QAM	1.4	H	V	22.37		
					H	15.91		
1.4MHz(RB size 6 & RB offset 0)								
1732.50	20175	QPSK	1.4	H	V	23.74	30.00	Pass
					H	16.29		
1732.50	20175	16QAM	1.4	H	V	22.48		
					H	15.45		

Highest channel

Frequency (MHz)	UL Channel	Modulation	BW (MHz)	EUT Pol.	Antenna Pol.	EIRP(dBm)	Limit (dBm)	Result
1.4MHz(RB size 1 & RB offset 0)								
1754.30	20393	QPSK	1.4	H	V	23.27	30.00	Pass
					H	16.75		
1754.30	20393	16QAM	1.4	H	V	22.12		
					H	15.99		
1.4MHz(RB size 3 & RB offset 0)								
1754.30	20393	QPSK	1.4	H	V	23.39	30.00	Pass
					H	16.74		
1754.30	20393	16QAM	1.4	H	V	22.54		
					H	15.99		
1.4MHz(RB size 6 & RB offset 0)								
1754.30	20393	QPSK	1.4	H	V	23.31	30.00	Pass
					H	16.40		
1754.30	20393	16QAM	1.4	H	V	22.41		
					H	15.29		

Lowest channel

Frequency (MHz)	UL Channel	Modulation	BW (MHz)	EUT Pol.	Antenna Pol.	EIRP(dBm)	Limit (dBm)	Result
20MHz(RB size 1 & RB offset 0)								
1720.00	20050	QPSK	20	H	V	23.16	30.00	Pass
					H	16.68		
1720.00	20050	16QAM	20	H	V	22.24		
					H	15.27		
20MHz(RB size 50 & RB offset 0)								
1720.00	20050	QPSK	20	H	V	23.33	30.00	Pass
					H	16.39		
1720.00	20050	16QAM	20	H	V	22.11		
					H	15.34		
20MHz(RB size 100 & RB offset 0)								
1720.00	20050	QPSK	20	H	V	23.34	30.00	Pass
					H	16.99		
1720.00	20050	16QAM	20	H	V	22.44		
					H	15.56		

Middle channel

Frequency (MHz)	UL Channel	Modulation	BW (MHz)	EUT Pol.	Antenna Pol.	EIRP(dBm)	Limit (dBm)	Result
20MHz(RB size 1 & RB offset 0)								
1732.50	20175	QPSK	20	H	V	23.25	30.00	Pass
					H	16.32		
1732.50	20175	16QAM	20	H	V	22.33		
					H	15.42		
20MHz(RB size 50 & RB offset 0)								
1732.50	20175	QPSK	20	H	V	23.31	30.00	Pass
					H	16.33		
1732.50	20175	16QAM	20	H	V	22.43		
					H	15.45		
20MHz(RB size 100 & RB offset 0)								
1732.50	20175	QPSK	20	H	V	23.64	30.00	Pass
					H	16.04		
1732.50	20175	16QAM	20	H	V	22.16		
					H	15.99		

High channel

Frequency (MHz)	UL Channel	Modulation	BW (MHz)	EUT Pol.	Antenna Pol.	EIRP(dBm)	Limit (dBm)	Result
20MHz(RB size 1 & RB offset 0)								
1745.00	20300	QPSK	20	H	V	23.32	30.00	Pass
					H	16.18		
1745.00	20300	16QAM	20	H	V	22.39		
					H	15.41		
20MHz(RB size 50 & RB offset 0)								
1745.00	20300	QPSK	20	H	V	23.56	30.00	Pass
					H	16.12		
1745.00	20300	16QAM	20	H	V	22.45		
					H	15.11		
20MHz(RB size 100 & RB offset 0)								
1745.00	20300	QPSK	20	H	V	23.43	30.00	Pass
					H	16.42		
1745.00	20300	16QAM	20	H	V	22.53		
					H	15.48		

LTE band 5 part

Lowest channel

Frequency (MHz)	UL Channel	Modulation	BW (MHz)	EUT Pol.	Antenna Pol.	ERP(dBm)	Limit (dBm)	Result
1.4MHz(RB size 1 & RB offset 0)								
824.70	20407	QPSK	1.4	H	V	16.05	38.45	Pass
					H	16.44		
824.70	20407	16QAM	1.4	H	V	14.93		
					H	16.34		
1.4MHz(RB size 3& RB offset 0)								
824.70	20407	QPSK	1.4	H	V	16.37	38.45	Pass
					H	16.70		
824.70	20407	16QAM	1.4	H	V	14.42		
					H	16.47		
1.4MHz(RB size 6& RB offset 0)								
824.70	20407	QPSK	1.4	H	V	16.41	38.45	Pass
					H	16.31		
824.70	20407	16QAM	1.4	H	V	14.51		
					H	16.47		

Middle channel

Frequency (MHz)	UL Channel	Modulation	BW (MHz)	EUT Pol.	Antenna Pol.	ERP(dBm)	Limit (dBm)	Result
1.4MHz(RB size 1 & RB offset 0)								
836.50	20525	QPSK	1.4	H	V	16.41	38.45	Pass
					H	16.68		
836.50	20525	16QAM	1.4	H	V	14.26		
					H	16.92		
1.4MHz(RB size 3& RB offset 0)								
836.50	20525	QPSK	1.4	H	V	16.51	38.45	Pass
					H	16.47		
836.50	20525	16QAM	1.4	H	V	14.31		
					H	16.16		
1.4MHz(RB size 6& RB offset 0)								
836.50	20525	QPSK	1.4	H	V	16.51	38.45	Pass
					H	16.42		
836.50	20525	16QAM	1.4	H	V	14.86		
					H	16.47		

Highest channel

Frequency (MHz)	UL Channel	Modulation	BW (MHz)	EUT Pol.	Antenna Pol.	ERP(dBm)	Limit (dBm)	Result
1.4MHz(RB size 1 & RB offset 0)								
848.30	20643	QPSK	1.4	H	V	16.92	38.45	Pass
					H	16.43		
848.30	20643	16QAM	1.4	H	V	14.72		
					H	16.42		
1.4MHz(RB size 3& RB offset 0)								
848.30	20643	QPSK	1.4	H	V	16.50	38.45	Pass
					H	16.47		
848.30	20643	16QAM	1.4	H	V	14.57		
					H	16.13		
1.4MHz(RB size 6& RB offset 0)								
848.30	20643	QPSK	1.4	H	V	16.58	38.45	Pass
					H	16.55		
848.30	20643	16QAM	1.4	H	V	14.26		
					H	16.51		

Lowest channel

Frequency (MHz)	UL Channel	Modulation	BW (MHz)	EUT Pol.	Antenna Pol.	ERP(dBm)	Limit (dBm)	Result
10MHz(RB size 1 & RB offset 0)								
829.00	20450	QPSK	10	H	V	16.17	38.45	Pass
					H	16.35		
829.00	20450	16QAM	10	H	V	14.47		
					H	16.19		
10MHz(RB size 25& RB offset 0)								
829.00	20450	QPSK	10	H	V	16.41	38.45	Pass
					H	16.42		
829.00	20450	16QAM	10	H	V	14.16		
					H	16.31		
10MHz(RB size 50& RB offset 0)								
829.00	20450	QPSK	10	H	V	16.94	38.45	Pass
					H	16.42		
829.00	20450	16QAM	10	H	V	14.12		
					H	16.99		

Middle channel

Frequency (MHz)	UL Channel	Modulation	BW (MHz)	EUT Pol.	Antenna Pol.	ERP(dBm)	Limit (dBm)	Result
10MHz(RB size 1 & RB offset 0)								
836.50	20525	QPSK	10	H	V	16.47	38.45	Pass
					H	16.59		
836.50	20525	16QAM	10	H	V	14.72		
					H	16.31		
10MHz(RB size 25& RB offset 0)								
836.50	20525	QPSK	10	H	V	16.28	38.45	Pass
					H	16.99		
836.50	20525	16QAM	10	H	V	14.18		
					H	16.99		
10MHz(RB size 50 & RB offset 0)								
836.50	20525	QPSK	10	H	V	16.43	38.45	Pass
					H	16.47		
836.50	20525	16QAM	10	H	V	14.72		
					H	16.47		

High channel

Frequency (MHz)	UL Channel	Modulation	BW (MHz)	EUT Pol.	Antenna Pol.	ERP(dBm)	Limit (dBm)	Result
10MHz(RB size 1 & RB offset 0)								
844.00	20600	QPSK	10	H	V	16.41	38.45	Pass
					H	16.31		
844.00	20600	16QAM	10	H	V	14.29		
					H	16.99		
10MHz(RB size 25& RB offset 0)								
844.00	20600	QPSK	10	H	V	16.94	38.45	Pass
					H	16.61		
844.00	20600	16QAM	10	H	V	14.68		
					H	16.92		
10MHz(RB size 50 & RB offset 0)								
844.00	20600	QPSK	10	H	V	16.85	38.45	Pass
					H	16.99		
844.00	20600	16QAM	10	H	V	14.24		
					H	16.82		

LTE band 17 part
Lowest channel

Frequency (MHz)	UL Channel	Modulation	BW (MHz)	EUT Pol.	Antenna Pol.	ERP(dBm)	Limit (dBm)	Result
5MHz(RB size 1 & RB offset 0)								
706.50	23755	QPSK	5	H	V	16.76	34.77	Pass
					H	14.63		
706.50	23755	16QAM	5	H	V	16.62		
					H	13.47		
5MHz(RB size 12 & RB offset 0)								
706.50	23755	QPSK	5	H	V	16.34	34.77	Pass
					H	14.49		
706.50	23755	16QAM	5	H	V	16.98		
					H	13.87		
5MHz(RB size 25 & RB offset 0)								
706.50	23755	QPSK	5	H	V	16.73	34.77	Pass
					H	14.35		
706.50	23755	16QAM	5	H	V	16.53		
					H	13.38		

Middle channel

Frequency (MHz)	UL Channel	Modulation	BW (MHz)	EUT Pol.	Antenna Pol.	ERP(dBm)	Limit (dBm)	Result
5MHz(RB size 1 & RB offset 0)								
710.00	23790	QPSK	5	H	V	16.81	34.77	Pass
					H	14.14		
710.00	23790	16QAM	5	H	V	16.42		
					H	13.24		
5MHz(RB size 12 & RB offset 0)								
710.00	23790	QPSK	5	H	V	16.49	34.77	Pass
					H	14.95		
710.00	23790	16QAM	5	H	V	16.57		
					H	13.76		
5MHz(RB size 25 & RB offset 0)								
710.00	23790	QPSK	5	H	V	16.64	34.77	Pass
					H	14.41		
710.00	23790	16QAM	5	H	V	16.14		
					H	16.44		

Highest channel

Frequency (MHz)	UL Channel	Modulation	BW (MHz)	EUT Pol.	Antenna Pol.	ERP(dBm)	Limit (dBm)	Result
5MHz(RB size 1 & RB offset 0)								
713.50	23825	QPSK	5	H	V	16.43	34.77	Pass
					H	14.31		
713.50	23825	16QAM	5	H	V	16.30		
					H	13.13		
5MHz(RB size 12 & RB offset 0)								
713.50	23825	QPSK	5	H	V	16.52	34.77	Pass
					H	14.25		
713.50	23825	16QAM	5	H	V	16.57		
					H	13.76		
5MHz(RB size 25 & RB offset 0)								
713.50	23825	QPSK	5	H	V	16.66	34.77	Pass
					H	14.62		
713.50	23825	16QAM	5	H	V	16.23		
					H	16.38		

Lowest channel

Frequency (MHz)	UL Channel	Modulation	BW (MHz)	EUT Pol.	Antenna Pol.	ERP(dBm)	Limit (dBm)	Result
10MHz(RB size 1 & RB offset 0)								
709.00	23780	QPSK	10	H	V	16.38	34.77	Pass
					H	14.86		
709.00	23780	16QAM	10	H	V	16.64		
					H	13.44		
10MHz(RB size 25& RB offset 0)								
709.00	23780	QPSK	10	H	V	16.46	34.77	Pass
					H	14.69		
709.00	23780	16QAM	10	H	V	16.92		
					H	13.16		
10MHz(RB size 50& RB offset 0)								
709.00	23780	QPSK	10	H	V	16.50	34.77	Pass
					H	14.16		
709.00	23780	16QAM	10	H	V	16.84		
					H	13.97		

Middle channel

Frequency (MHz)	UL Channel	Modulation	BW (MHz)	EUT Pol.	Antenna Pol.	ERP(dBm)	Limit (dBm)	Result
10MHz(RB size 1 & RB offset 0)								
710.00	23790	QPSK	10	H	V	16.19	34.77	Pass
					H	14.35		
710.00	23790	16QAM	10	H	V	16.91		
					H	13.43		
10MHz(RB size 25& RB offset 0)								
710.00	23790	QPSK	10	H	V	16.14	34.77	Pass
					H	14.91		
710.00	23790	16QAM	10	H	V	16.35		
					H	13.97		
10MHz(RB size 50& RB offset 0)								
710.00	23790	QPSK	10	H	V	16.57	34.77	Pass
					H	14.41		
710.00	23790	16QAM	10	H	V	16.31		
					H	13.26		

Highest channel

Frequency (MHz)	UL Channel	Modulation	BW (MHz)	EUT Pol.	Antenna Pol.	ERP(dBm)	Limit (dBm)	Result
10MHz(RB size 1 & RB offset 0)								
711.00	23800	QPSK	10	H	V	16.21	34.77	Pass
					H	14.37		
711.00	23800	16QAM	10	H	V	16.35		
					H	13.87		
10MHz(RB size 25& RB offset 0)								
711.00	23800	QPSK	10	H	V	16.53	34.77	Pass
					H	14.34		
711.00	23800	16QAM	10	H	V	16.97		
					H	13.79		
10MHz(RB size 50& RB offset 0)								
711.00	23800	QPSK	10	H	V	16.41	34.77	Pass
					H	14.26		
711.00	23800	16QAM	10	H	V	16.91		
					H	13.35		

6.11 Field strength of spurious radiation measurement

Test Requirement:	Part 24.238 (a),Part 27.53(g), Part 22.917(a), Part 27.53(h)
Test Method:	FCC part2.1053
Limit:	LTE Band 2, LTE Band 4, LTE Band 5 ,LTE Band 17: -13dBm,
Test setup:	Below 1GHz 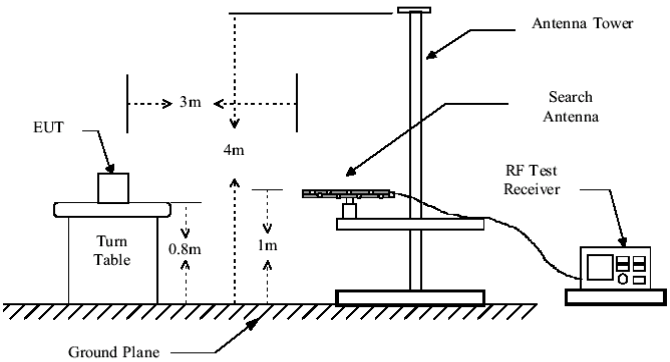 Above 1GHz 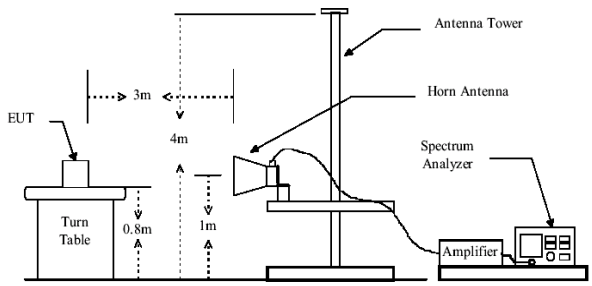 Substituted method: 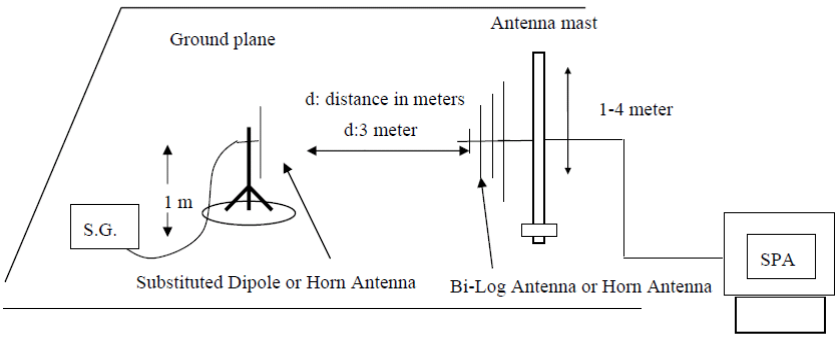
Test Procedure:	1. The EUT was placed on an non-conductive turntable using a non-conductive support. The radiated emission at the fundamental frequency was measured at 3 m with a test antenna and EMI spectrum analyzer. 2. During the tests, the antenna height and the EUT azimuth were varied in order to identify the maximum level of emissions from the EUT. This maximization process was repeated with the EUT positioned in each of its three orthogonal orientations. 3. The frequency range up to tenth harmonic was investigated for each of three fundamental frequency (low, middle and high channels). Once spurious emission was identified, the power of the emission

	was determined using the substitution method. 4. The spurious emissions attenuation was calculated as the difference between radiated power at the fundamental frequency and the spurious emissions frequency. ERP / EIRP = S.G. output (dBm) + Antenna Gain(dB/dBi) – Cable Loss (dB)
Test Instruments:	Refer to section 5.8 for details
Test mode:	Refer to section 5.3 for details.
Test results:	Passed

Measurement Data (worst case):

Below 1GHz:

The emission levels of below 1 GHz are 20 dB lower than the limit so not show in this report.

Above 1GHz
For above 1 GHz, all test modes were performed, and just the worst case shown in the report.

LTE band 2 part:

1.4MHz(RB size 1 & RB offset 0) for QPSK				
Frequency (MHz)	Spurious Emission		Limit (dBm)	Result
	Polarization	Level (dBm)		
Lowest				
3701.40	Vertical	-28.00	-13.00	Pass
5552.10	V	-31.16		
7402.00	V	-42.67		
3701.40	Horizontal	-29.37		
5552.10	H	-28.99		
7402.00	H	-42.37		
Middle				
3760.00	Vertical	-30.81	-13.00	Pass
5640.00	V	-32.01		
7520.00	V	-42.42		
3760.00	Horizontal	-32.99		
5640.00	H	-26.98		
7520.00	H	-42.32		
Highest				
3816.60	Vertical	-37.14	-13.00	Pass
5724.90	V	-33.90		
7633.20	V	-42.39		
3816.60	Horizontal	-35.17		
5724.90	H	-29.98		
7633.20	H	-42.76		

3MHz(RB size 1 & RB offset 0) for QPSK				
Frequency (MHz)	Spurious Emission		Limit (dBm)	Result
	Polarization	Level (dBm)		
Lowest				
3703.00	Vertical	-28.44	-13.00	Pass
5554.50	V	-31.57		
7406.00	V	-42.22		
3703.00	Horizontal	-29.42		
5554.50	H	-28.68		
7406.00	H	-42.13		
Middle				
3760.00	Vertical	-30.74	-13.00	Pass
5640.00	V	-32.46		
7520.00	V	-42.17		
3760.00	Horizontal	-32.46		
5640.00	H	-26.74		
7520.00	H	-42.67		
Highest				
3817.00	Vertical	-37.57	-13.00	Pass
5725.50	V	-33.74		
7634.00	V	-42.64		
3817.00	Horizontal	-35.75		
5725.50	H	-29.99		
7634.00	H	-42.14		

5MHz(RB size 1 & RB offset 0) for QPSK				
Frequency (MHz)	Spurious Emission		Limit (dBm)	Result
	Polarization	Level (dBm)		
Lowest				
3705.00	Vertical	-28.38	-13.00	Pass
5557.50	V	-31.85		
7410.00	V	-42.44		
3705.00	Horizontal	-29.37		
5557.50	H	-28.44		
7410.00	H	-42.33		
Middle				
3760.00	Vertical	-30.13	-13.00	Pass
5640.00	V	-32.64		
7520.00	V	-42.41		
3760.00	Horizontal	-32.24		
5640.00	H	-26.91		
7520.00	H	-42.68		
Highest				
3815.00	Vertical	-37.44	-13.00	Pass
5722.50	V	-33.46		
7630.00	V	-42.42		
3815.00	Horizontal	-35.68		
5722.50	H	-29.74		
7630.00	H	-42.79		

10MHz(RB size 1 & RB offset 0) for QPSK				
Frequency (MHz)	Spurious Emission		Limit (dBm)	Result
	Polarization	Level (dBm)		
Lowest				
3710.00	Vertical	-28.68	-13.00	Pass
5565.00	V	-31.23		
7420.00	V	-42.18		
3710.00	Horizontal	-29.47		
5565.00	H	-26.82		
7420.00	H	-42.41		
Middle				
3760.00	Vertical	-30.79	-13.00	Pass
5640.00	V	-32.41		
7520.00	V	-42.14		
3760.00	Horizontal	-32.22		
5640.00	H	-26.15		
7520.00	H	-42.37		
Highest				
3810.00	Vertical	-37.99	-13.00	Pass
5715.00	V	-33.15		
7620.00	V	-42.29		
3810.00	Horizontal	-35.91		
5715.00	H	-29.79		
7620.00	H	-42.42		

15MHz(RB size 1 & RB offset 0) for QPSK				
Frequency (MHz)	Spurious Emission		Limit (dBm)	Result
	Polarization	Level (dBm)		
Lowest				
3715.00	Vertical	-28.37	-13.00	Pass
5572.50	V	-31.14		
7430.00	V	-42.42		
3715.00	Horizontal	-29.68		
5572.50	H	-28.13		
7430.00	H	-42.99		
Middle				
3760.00	Vertical	-30.84	-13.00	Pass
5640.00	V	-32.76		
7520.00	V	-42.12		
3760.00	Horizontal	-32.29		
5640.00	H	-26.15		
7520.00	H	-42.41		
Highest				
3805.00	Vertical	-37.14	-13.00	Pass
5707.50	V	-33.41		
7610.00	V	-42.91		
3805.00	Horizontal	-35.19		
5707.50	H	-29.46		
7610.00	H	-42.13		

20MHz(RB size 1 & RB offset 0) for QPSK				
Frequency (MHz)	Spurious Emission		Limit (dBm)	Result
	Polarization	Level (dBm)		
Lowest				
3720.00	Vertical	-38.00	-13.00	Pass
5580.00	V	-31.42		
7440.00	V	-42.12		
3720.00	Horizontal	-29.90		
5580.00	H	-26.18		
7440.00	H	-42.99		
Middle				
3760.00	Vertical	-30.74	-13.00	Pass
5640.00	V	-32.41		
7520.00	V	-42.12		
3760.00	Horizontal	-32.81		
5640.00	H	-26.71		
7520.00	H	-42.21		
Highest				
3800.00	Vertical	-37.89	-13.00	Pass
5700.00	V	-33.92		
7600.00	V	-42.88		
3800.00	Horizontal	-35.62		
5700.00	H	-29.31		
7600.00	H	-42.81		

LTE Band 4 Part:

1.4MHz(RB size 1 & RB offset 0) for QPSK				
Frequency (MHz)	Spurious Emission		Limit (dBm)	Result
	Polarization	Level (dBm)		
Lowest				
3421.40	Vertical	-30.08	-13.00	Pass
5132.10	V	-30.14		
6842.80	V	-40.37		
3421.40	Horizontal	-30.91		
5132.10	H	-32.93		
6842.80	H	-42.37		
Middle				
3465.00	Vertical	-33.64	-13.00	Pass
5197.50	V	-29.21		
6930.00	V	-42.36		
3465.00	Horizontal	-34.88		
5197.50	H	-30.88		
6930.00	H	-42.41		
Highest				
3508.60	Vertical	-31.30	-13.00	Pass
5262.90	V	-26.56		
7017.20	V	-37.64		
3508.60	Horizontal	-36.35		
5262.90	H	-29.83		
7017.20	H	-41.12		

3MHz(RB size 1 & RB offset 0) for QPSK				
Frequency (MHz)	Spurious Emission		Limit (dBm)	Result
	Polarization	Level (dBm)		
Lowest				
3423.00	Vertical	-30.52	-13.00	Pass
5134.50	V	-30.25		
6846.00	V	-40.43		
3423.00	Horizontal	-30.57		
5134.50	H	-32.66		
6846.00	H	-42.42		
Middle				
3465.00	Vertical	-30.43	-13.00	Pass
5197.50	V	-29.73		
6930.00	V	-42.42		
3465.00	Horizontal	-34.57		
5197.50	H	-30.42		
6930.00	H	-42.69		
Highest				
3507.00	Vertical	-34.44	-13.00	Pass
5260.50	V	-26.83		
7014.00	V	-37.12		
3507.00	Horizontal	-36.36		
5260.50	H	-29.12		
7014.00	H	-41.23		

5MHz(RB size 1 & RB offset 0) for QPSK				
Frequency (MHz)	Spurious Emission		Limit (dBm)	Result
	Polarization	Level (dBm)		
Lowest				
3425.00	Vertical	-30.42	-13.00	Pass
5137.50	V	-30.16		
6850.00	V	-40.57		
3425.00	Horizontal	-30.41		
5137.50	H	-32.16		
6850.00	H	-42.34		
Middle				
3465.00	Vertical	-33.49	-13.00	Pass
5197.50	V	-29.98		
6930.00	V	-42.73		
3465.00	Horizontal	-34.87		
5197.50	H	-30.73		
6930.00	H	-42.43		
Highest				
3505.00	Vertical	-31.54	-13.00	Pass
5257.50	V	-26.43		
7010.00	V	-37.42		
3505.00	Horizontal	-36.16		
5257.50	H	-29.57		
7010.00	H	-41.44		

10MHz(RB size 1 & RB offset 0) for QPSK				
Frequency (MHz)	Spurious Emission		Limit (dBm)	Result
	Polarization	Level (dBm)		
Lowest				
3430.00	Vertical	-30.66	-13.00	Pass
5145.00	V	-30.79		
6860.00	V	-40.29		
3430.00	Horizontal	-30.12		
5145.00	H	-32.36		
6860.00	H	-42.16		
Middle				
3465.00	Vertical	-30.36	-13.00	Pass
5197.50	V	-29.63		
6930.00	V	-42.21		
3465.00	Horizontal	-34.99		
5197.50	H	-30.16		
6930.00	H	-42.92		
Highest				
3500.00	Vertical	-34.91	-13.00	Pass
5250.00	V	-26.41		
7000.00	V	-37.49		
3500.00	Horizontal	-36.29		
5250.00	H	-29.12		
7000.00	H	-41.23		

15MHz(RB size 1 & RB offset 0) for QPSK				
Frequency (MHz)	Spurious Emission		Limit (dBm)	Result
	Polarization	Level (dBm)		
Lowest				
3435.00	Vertical	-30.57	-13.00	Pass
5152.50	V	-30.12		
6870.00	V	-40.23		
3435.00	Horizontal	-30.36		
5152.50	H	-32.84		
6870.00	H	-42.12		
Middle				
3465.00	Vertical	-33.41	-13.00	Pass
5197.50	V	-29.44		
6930.00	V	-42.36		
3465.00	Horizontal	-34.35		
5197.50	H	-30.66		
6930.00	H	-42.42		
Highest				
3495.00	Vertical	-31.52	-13.00	Pass
5242.50	V	-26.41		
6990.00	V	-37.33		
3495.00	Horizontal	-36.63		
5242.50	H	-29.46		
6990.00	H	-41.14		

20MHz(RB size 1 & RB offset 0) for QPSK				
Frequency (MHz)	Spurious Emission		Limit (dBm)	Result
	Polarization	Level (dBm)		
Lowest				
3440.00	Vertical	-30.23	-13.00	Pass
5160.00	V	-30.36		
6880.00	V	-40.84		
3440.00	Horizontal	-30.44		
5160.00	H	-30.29		
6880.00	H	-42.41		
Middle				
3465.00	Vertical	-30.49	-13.00	Pass
5197.50	V	-29.41		
6930.00	V	-42.36		
3465.00	Horizontal	-34.12		
5197.50	H	-30.49		
6930.00	H	-42.57		
Highest				
3490.00	Vertical	-34.42	-13.00	Pass
5235.00	V	-26.57		
6980.00	V	-37.35		
3490.00	Horizontal	-36.42		
5235.00	H	-29.46		
6980.00	H	-41.91		

LTE Band 5 Part:

1.4MHz(RB size 1 & RB offset 0) for QPSK				
Frequency (MHz)	Spurious Emission		Limit (dBm)	Result
	Polarization	Level (dBm)		
Lowest				
1649.40	Vertical	-30.33	-13	Pass
2474.10	V	-36.84		
3298.80	V	-43.49		
1649.40	Horizontal	-37.73		
2474.10	H	-27.41		
3298.80	H	-49.36		
Middle				
1673.00	Vertical	-31.86	-13	Pass
2509.50	V	-37.54		
3346.00	V	-44.99		
1673.00	Horizontal	-35.54		
2509.50	H	-31.12		
3346.00	H	-46.61		
Highest				
1696.60	Vertical	-30.37	-13	Pass
2544.90	V	-35.41		
3393.20	V	-44.54		
1696.60	Horizontal	-34.42		
2544.90	H	-28.99		
3393.20	H	-34.29		

3MHz(RB size 1 & RB offset 0) for QPSK				
Frequency (MHz)	Spurious Emission		Limit (dBm)	Result
	Polarization	Level (dBm)		
Lowest				
1651.00	Vertical	-33.30	-13	Pass
2476.50	V	-36.06		
3302.00	V	-43.39		
1651.00	Horizontal	-37.40		
2476.50	H	-27.50		
3302.00	H	-49.24		
Middle				
1673.00	Vertical	-31.61	-13	Pass
2509.50	V	-37.13		
3346.00	V	-44.66		
1673.00	Horizontal	-35.75		
2509.50	H	-31.72		
3346.00	H	-46.79		
Highest				
1695.00	Vertical	-30.54	-13	Pass
2542.50	V	-35.90		
3390.00	V	-42.94		
1695.00	Horizontal	-34.99		
2542.50	H	-28.97		
3390.00	H	-44.16		

5MHz(RB size 1 & RB offset 0) for QPSK				
Frequency (MHz)	Spurious Emission		Limit (dBm)	Result
	Polarization	Level (dBm)		
Lowest				
1653.00	Vertical	-30.33	-13	Pass
2479.50	V	-36.73		
3306.00	V	-43.41		
1653.00	Horizontal	-37.54		
2479.50	H	-27.99		
3306.00	H	-49.35		
Middle				
1673.00	Vertical	-31.95	-13	Pass
2509.50	V	-37.95		
3346.00	V	-44.54		
1673.00	Horizontal	-35.42		
2509.50	H	-31.17		
3346.00	H	-46.55		
Highest				
1693.00	Vertical	-30.33	-13	Pass
2539.50	V	-35.11		
3386.00	V	-44.54		
1693.00	Horizontal	-34.41		
2539.50	H	-28.35		
3386.00	H	-34.49		

10MHz(RB size 1 & RB offset 0) for QPSK				
Frequency (MHz)	Spurious Emission		Limit (dBm)	Result
	Polarization	Level (dBm)		
Lowest				
1658.00	Vertical	-33.16	-13	Pass
2487.00	V	-36.25		
3316.00	V	-43.37		
1658.00	Horizontal	-37.39		
2487.00	H	-27.34		
3316.00	H	-49.12		
Middle				
1673.00	Vertical	-31.12	-13	Pass
2509.50	V	-37.11		
3346.00	V	-44.17		
1673.00	Horizontal	-35.54		
2509.50	H	-31.35		
3346.00	H	-46.12		
Highest				
1688.00	Vertical	-30.52	-13	Pass
2532.00	V	-35.37		
3376.00	V	-42.33		
1688.00	Horizontal	-34.52		
2532.00	H	-28.33		
3376.00	H	-44.89		

LTE Band 17 Part:

5MHz(RB size 1 & RB offset 0) for QPSK				
Frequency (MHz)	Spurious Emission		Limit (dBm)	Result
	Polarization	Level (dBm)		
Lowest				
1413.00	Vertical	-35.19	-13.00	Pass
2119.50	V	-42.05		
2826.00	V	-50.26		
1413.00	Horizontal	-38.17		
2119.50	H	-42.36		
2826.00	H	-49.98		
Middle				
1420.00	Vertical	-37.75	-13.00	Pass
2130.00	V	-41.77		
2840.00	V	-50.39		
1420.00	Horizontal	-40.86		
2130.00	H	-45.60		
2840.00	H	-53.56		
Highest				
1427.00	Vertical	-39.09	-13.00	Pass
2140.50	V	-42.40		
2854.00	V	-45.87		
1427.00	Horizontal	-41.22		
2140.50	H	-45.96		
2854.00	H	-50.14		

10MHz(RB size 1 & RB offset 0) for QPSK				
Frequency (MHz)	Spurious Emission		Limit (dBm)	Result
	Polarization	Level (dBm)		
Lowest				
1418.00	Vertical	-35.14	-13.00	Pass
2127.00	V	-42.20		
2836.00	V	-50.36		
1418.00	Horizontal	-38.36		
2127.00	H	-42.39		
2836.00	H	-49.42		
Middle				
1420.00	Vertical	-37.50	-13.00	Pass
2130.00	V	-41.36		
2840.00	V	-50.42		
1420.00	Horizontal	-40.41		
2130.00	H	-45.44		
2840.00	H	-53.53		
Highest				
1422.00	Vertical	-39.36	-13.00	Pass
2133.00	V	-42.41		
2844.00	V	-45.58		
1422.00	Horizontal	-41.50		
2133.00	H	-45.68		
2844.00	H	-50.14		

6.12 Frequency stability V.S. Temperature measurement

Test Requirement:	FCC Part2.1055(a)(1)(b)
Test Method:	FCC Part2.1055(a)(1)(b)
Limit:	±2.5ppm
Test setup:	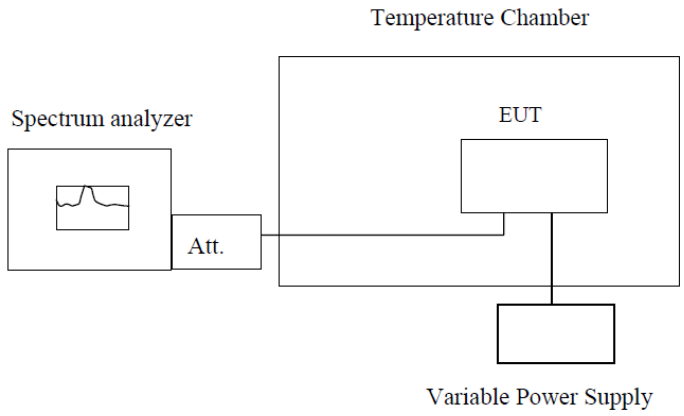 **Note :** Measurement setup for testing on Antenna connector
Test procedure:	1. The equipment under test was connected to an external DC power supply and input rated voltage. 2. RF output was connected to a frequency counter or spectrum analyzer via feed through attenuators. 3. The EUT was placed inside the temperature chamber. 4. Set the spectrum analyzer RBW low enough to obtain the desired frequency resolution and measure EUT 25℃ operating frequency as reference frequency. 5. Turn EUT off and set the chamber temperature to –30℃. After the temperature stabilized for approximately 30 minutes recorded the frequency. 6. Repeat step measure with 10℃ increased per stage until the highest temperature of +50℃ reached
Test Instruments:	Refer to section 5.8 for details
Test mode:	Refer to section 5.3 for details
Test results:	Refer to FCC ID: QISME909U-523
Remark:	All three channels of all modulations have been tested, but only the worst channel and the worst modulation show in this test item.

6.13 Frequency stability V.S. Voltage measurement

Test Requirement:	FCC Part2.1055(d)(1)(2)
Test Method:	FCC Part2.1055(d)(1)(2)
Limit:	2.5ppm
Test setup:	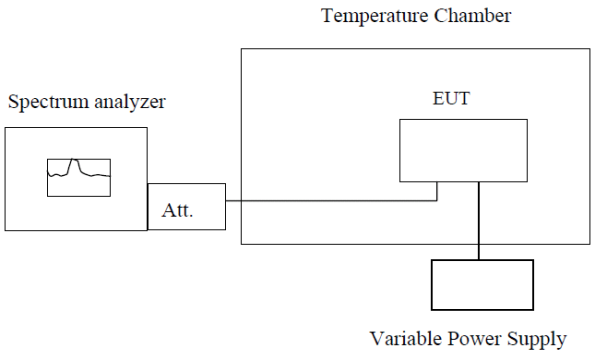 **Note :** Measurement setup for testing on Antenna connector
Test procedure:	1. Set chamber temperature to 25℃. Use a variable DC power source to power the EUT and set the voltage to rated voltage. 2. Set the spectrum analyzer RBW low enough to obtain the desired frequency resolution and recorded the frequency. 3. Reduce the input voltage to specify extreme voltage variation (+/-15%) and endpoint, record the maximum frequency change.
Test Instruments:	Refer to section 5.8 for details
Test mode:	Refer to section 5.3 for details, and all channels have been tested, only shows the worst channel data in this report.
Test results:	Refer to FCC ID: QISME909U-523