DATE	REV.	REVISION DESCRIPTION	DRAW
17-01-06	1	1: add word	

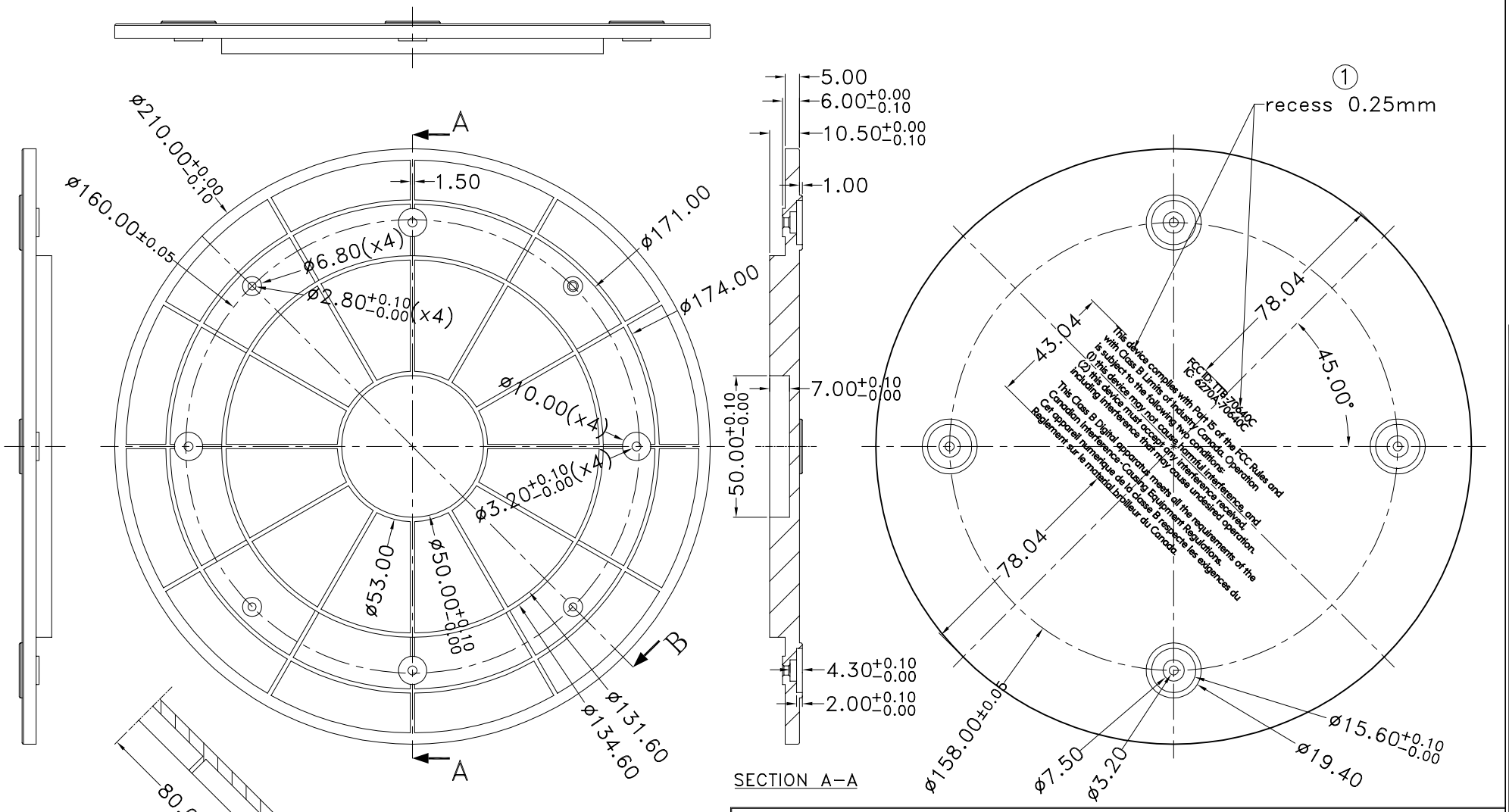

NATIONAL ELECTRONICS & WATCH CO.,Ltd.			
TITLE	MODEL	PART NO.	REV.
BASIC_COVER	CONE	05-044-3311-1	1
METERIAL: ABS	FINISH:		FILE: BASIC_COVER

DRAW	CHECK	APPROVE	REMARKS	SCALE 1 : 1
WAI				SHEET SIZE A2
25-08-05				SHEET 1 OF 1

LINEAR UNIT	MM	GENERAL TOLERANCE	_+0.05	GENERAL RAD/FILLET	R0.20
ANGULAR UNIT	DEGREE	GENERAL TOLERANCE	_+1/2°	GENERAL DRAFT	1° MAX

The enclosed design is proprietary intellectual property owned by National Electronics & Watch Co., Ltd. and it may NOT be used, copied or distributed except with authorization in writing from National Electronics & Watch Co., Ltd.