DOC.NO:

NOTE:OPEN THE DOOR

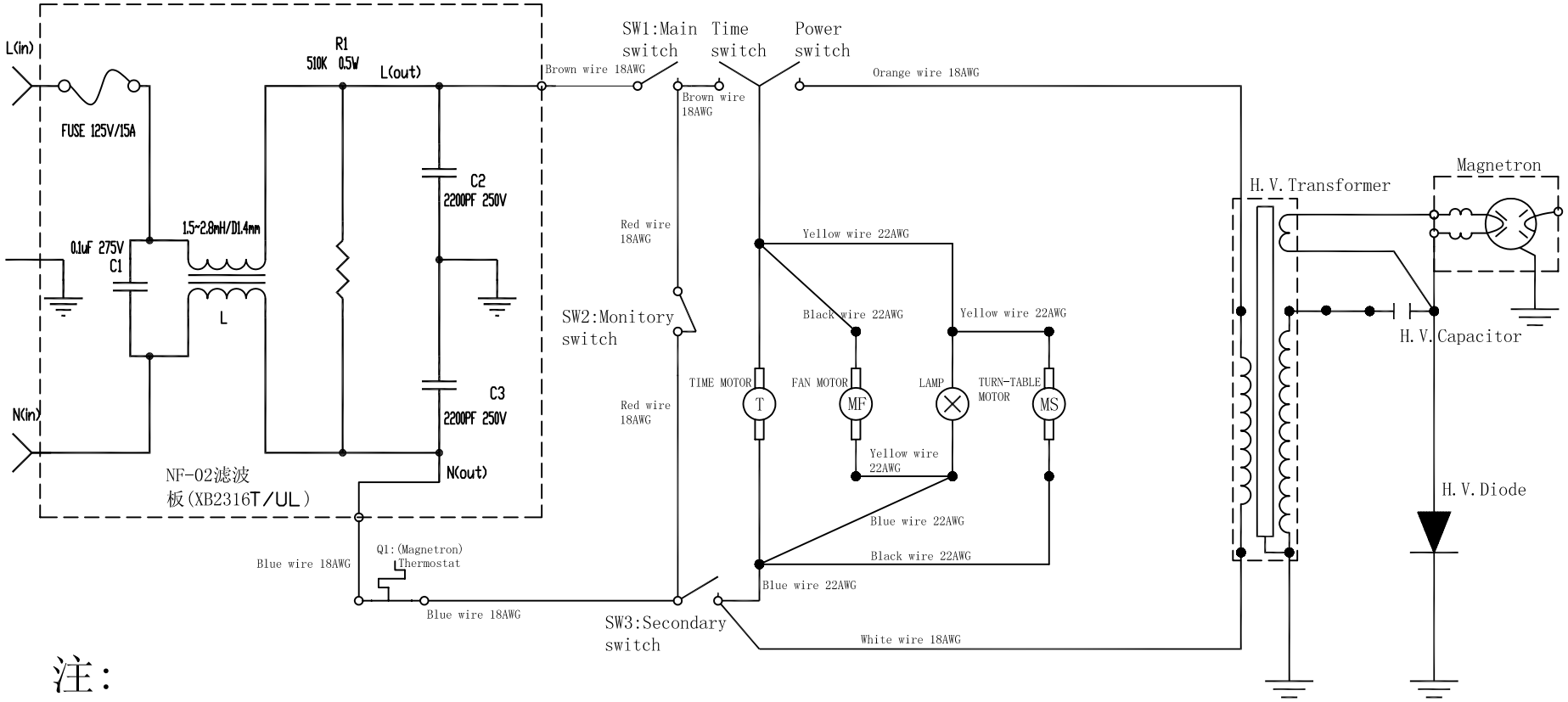

注:

此电路图适用于以下型号:

XB23**;MO23**系列机械式微波炉

CODE:	DESCRIPTION:	BY:	DATE:
GUANGDONG DONGLING KITCHEN ENTERPRISE GROUP			
MODEL: XB2316 MICROWAVE OVEN(UL/CSA)		PART.NO:	
TITLE: SCHEMATIC CIRCUIT		DWG.NO: XB2316-00-30(UL)	REV: B
MAT'L:		PREPARED BY:	DATE:
QTY:	SCALE:	CHECKED BY:	DATE:
	SHEET: 1 OF 1	STANDARD BY:	DATE:
	UNITS: mm	REVIEWED BY:	DATE:
	FRAME: A4	APPROVED BY:	DATE:

Form No. 01-165-C