Underwriters Laboratories Inc.

www.ul.com/emc
www.ulk.co.kr

Project:	**11CA49640**
File:	**TC8316**
Report:	**08CA48859-FCCP15B-A1**
Date:	**Nov. 15, 2011**
Model:	**XT DUAL**

FCC Test Report

Sat/GSM Mobile Hand Held Terminal
Model : XT DUAL

For

Asia Pacific Satellite Industries Co., Ltd.

9FL, Lotte IT Castle 2-Dong,
#550-1,Gasan-Dong, GeumCheon-Gu,
Seoul, Korea, 153-768

Copyright © 2005 Underwriters Laboratories Inc.

Underwriters Laboratories Inc. authorizes the above-named company to reproduce this Report provided it is reproduced in its entirety.

Only those products bearing the UL Mark should be considered as being covered by UL.

UL Korea, Ltd
33rd FL, Gangnam Finance Center, 737
Yeoksam-dong, Gangnam-gu, Seoul
135-984 Korea
Tel: +82.2.2009.9000, Fax:+82.2.2009.9405

A not-for-profit organization dedicated
to public safety and committed to
quality service for over 100 years

Report Directory

TEST REPORT DETAILS **3**

SUMMARY OF TESTING **4**

1 GENERAL PRODUCT INFORMATION **5**

1.1 EQUIPMENT DESCRIPTION 5
1.2 DETAILS OF TEST EQUIPMENT (EUT) 5
1.3 EQUIPMENT MARKING PLATE 7

2 TEST SPECIFICATION **7**

3 TEST CONDITIONS **8**

3.1 EQUIPMENT USED DURING TEST 8
3.2 INPUT/OUTPUT PORTS 8
3.3 POWER INTERFACE 8
3.4 EUT OPERATION MODES 9
3.5 ENVIRONMENT CONDITIONS 9
3.6 TEST CONFIGURATIONS 10

4 OVERVIEW OF TECHNICAL REQUIREMENTS **11**

4.1 CONDUCTED EMISSIONS 11
4.2 RADIATED EMISSIONS 11

5 TEST RESULTS **12**

5.1 CONDUCTED EMISSIONS TEST 12
5.2 RADIATED EMISSIONS TEST 18

Test Report Details

Tests Performed By:	UL Korea Ltd. 33rd FL. GFC Center, 737 Yeoksam-dong, Kangnam-ku, Seoul, 135-984, Korea
Test Site:	Chungbuk Technopark EMC Center 685-3 Yangcheong-ri, Ochang-eub, Cheongwon-kun, Chungbuk-province, Republic of Korea.
Applicant:	Asia Pacific Satellite Industries Co., Ltd. 9FL, Lotte IT Castle 2-Dong, #550-1,Gasan-Dong, GeumCheon-Gu, Seoul, Korea, 153-768
Applicant Contact:	WonJae Jung
Title:	Manager of R&D Center
Phone:	+82 2-2026-7780
Fax:	+82 2-2026-7771
E-mail:	jwjung@apsat.co.kr
Equipment Class:	TNE - Licensed Non-Broadcast Transmitter Held to Ear
Product Type:	Sat/GSM Mobile Hand Held Terminal
FCC ID:	TZ5XTDUAL
Model Number:	XT DUAL
Test standards:	FCC 47 CFR Part 15 : Radio Frequency devices Subpart B Unintentional Radiators_Oct. 1, 2007
Sample Serial Number:	Prototype
Sample Receive Date:	2008-08-20
Testing Date:	2008-08-20 ~ 09-25
Test Report Date:	2009-04-02
Test Report Reissue Date:	2011-11-15
Overall Results:	Pass

UL Korea as an affiliate of Underwriters Laboratories Inc. EMC report apply only to the specific test samples and test results submitted for UL's review. All samples tested were in good operating condition throughout the entire test program. It is the manufacturer's responsibility to assure that additional production units of this model are manufactured with identical electrical and mechanical components. UL Korea Ltd. shall have no liability for any deductions, inferences or generalizations drawn by the client or others from UL Korea Ltd. issued reports. This report shall not be used to claim, constitute or imply product certification, approval, or any agency of the National Authorities. This report may contain test results that are not covered by the NVLAP or KOLAS accreditation.

Summary of Testing

The following tests were performed on a sample submitted for evaluation of compliance with 47 CFR Part 25_ 2007 Satellite Communications - Portable Earth Station Transceiver in the 1,5/1,6 GHz bands

No.	47 CFR Part 2, Part 15 and Part 25 Technical Requirements	Result	Remark
1	Conducted Emissions - §15.107(a)	Complied	
2	Radiated Emissions - §15.109(a)	Complied	

Conclusion:

The tests listed in the Summary of Testing section of this report have been performed and the results recorded by UL Korea Ltd. in accordance with the procedures stated in each test requirement and specification. The test list was determined by the Applicant as being applicable to the Equipment Under Test. As a result, the subject product has been verified to comply or not comply as noted in the Summary of Testing with each test specification. The test results relate only to the items tested.

Tested by
Sung Hoon Baek, Project Engineer
Conformity Assessment Services – 3014ASEO
UL Korea Ltd.

Reviewed by
Jeawoon, Choi, Senior Project Engineer
Conformity Assessment Services – 3014ASEO
UL Korea Ltd.

1 General Product Information

1.1 Equipment Description

XT is the **Satellite Mobile Hand Held Terminal** for Thuraya satellite mobile communication service based on GMR-1 and GMPRS-1. It supports various services such as voice, circuit data, packet data and fax etc.

1.2 Details of Test Equipment (EUT)

- Equipment Type : Sat/GSM Mobile Hand Held Terminal
- Model No. : XT DUAL
- Trade name : Thuraya
- Type of test Equipment : Portable Equipment
- Operating characteristic : MES(Mobile Earth Station) used in the Satellite Communication Services
- Manufacturer : Asia Pacific Satellite Industries Co., Ltd.
  9FL, Lotte IT Castle 2-Dong, #550-1,
  Gasan-dong, Geumcheon-gu, Seoul, Korea, 153-768

Equipment Configuration

The EUT is consisted of the following component provided by the manufacturer.

No.	Product Type	Manufacturer	Model	Comments
1	Satellite Mobile Terminal	Asia Pacific Satellite Industries Co., Ltd.	XT DUAL	EUT
2	Travel Charger	Phihong Technology Co Ltd.	PSC11R-050	EUT
3	Ear Set	Cresyin	EMB-ATS 106TKA	EUT

Equipment Type :

☐ Radio and ancillary equipment for fixed or semi-fixed use
☐ Radio and ancillary equipment for vehicular mounted use
☒ Radio and ancillary equipment for portable or handheld use

☒ Stand alone ☒ Host connected

☒ Self contained single unit ☐ Module with associated connection or interface

Technical descriptions and documents

The following documents was provided by the manufacturer.

No.	Document Title and Description
1	APSI, Sat/GSM Hand Held Terminal Technical Description.doc
2	APSI, Type Approval Block Diagram & Feature
3	APSI, CMF declaration.doc
4	APSI, XT Antenna.doc

1.3 Equipment Marking Plate

2 Test Specification

The following test specifications and standards have been applied and used for testing.

FCC 47 CFR Part 15: Radio frequency devices

§15.107(a) Conducted limits
§15.109(a) Radiated emission limits

3 Test Conditions

3.1 Equipment Used During Test

Use*	Product Type	Manufacturer	Model	Comments
EUT	Satellite Phone	Asia Pacific Satellite Industries Co., Ltd.	XT DUAL	
EUT	AC Adapter	Phihong Technology Co Ltd.	PSC11R-050	
SIM	Satellite Emulator	National Instruments	PXI-1042	Satellite Signal generator
AE	Monitor	Top Victory Electronics	ELM-728	2925CJA021461
AE	Notebook	FUJITSU	C1410	

Note:
* Use = EUT - Equipment Under Test,
AE - Auxiliary/Associated Equipment, or
SIM - Simulator (Not Subjected to Test)

3.2 Input/Output Ports

Port #	Name	Type*	Cable Max. >3m	Cable Shielded	Comments
0	Enclosure	-	-	-	Non-metal enclosure
1	DC Input port	DC	< 3m	Unshield	Connected to Charger
2	UDC port	I/O	< 3m	Shield	Connected to Satellite simulator
3	Ear set	I/O	< 3m	Unshield	Connected to Mono Ear set

Note :
-. All the interface cables and Power Cable have been provided by the manufacturer
-. UDC port is not user interface port for data download purpose only.

3.3 Power Interface

Mode #	Voltage (V)	Current (A)	Power (W)	Frequency (DC/AC-Hz)	Phases (#)	Comments
Rated	3.7 V	-	-	DC	-	Internal Battery Rating
1	3.7 V	-	-	DC	-	Normal operating voltage
2	3.5 V	-	-	DC	-	Battery End Point
3	4.2 V	-	-	DC	-	Battery Full charged voltage
4	110 V	0.3	-	AC 60 Hz	1	External ac adapter

3.4 EUT Operation Modes

Mode #	Description
1	Data download mode : Mobile phone is connected to the Host PC to download or upload the data with host.
Note : N/A	

3.5 Environment Conditions

Parameters	Normal condition	Extreme condition
Temperature	+ 15℃ ~ +35℃	-20℃ / +60℃
Humidity	20% ~ 75%	No excessive condensation occur
Supply voltage	3.7Vdc (Rated nominal voltage)	3.5 Vdc / 4.2 Vdc

Note ;
-. The extreme condition is applied to the boundary limits of the declared operational environmental condition by the manufacturer.
-. The operating condition for humidity requirement has not been declared in the manufacturer's specification.

3.6 Test Configurations

Mode #	Description
1	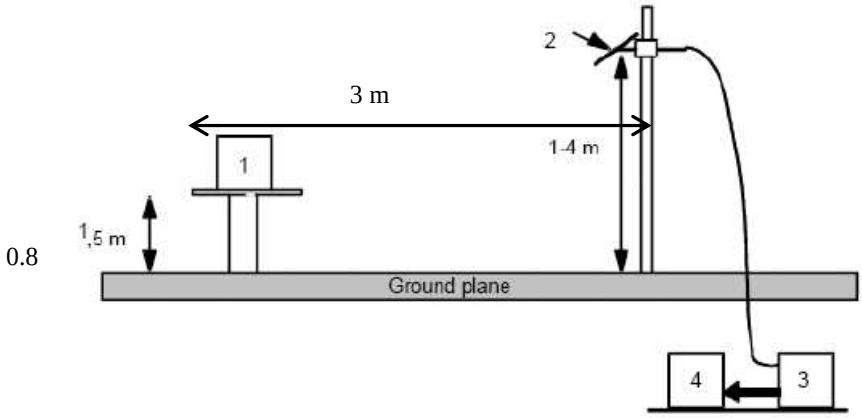 1) equipment under test; 2) test antenna; 3) high pass filter (if necessary); 4) spectrum analyser or measuring receiver. Test Configuration of Radiated Measurement
	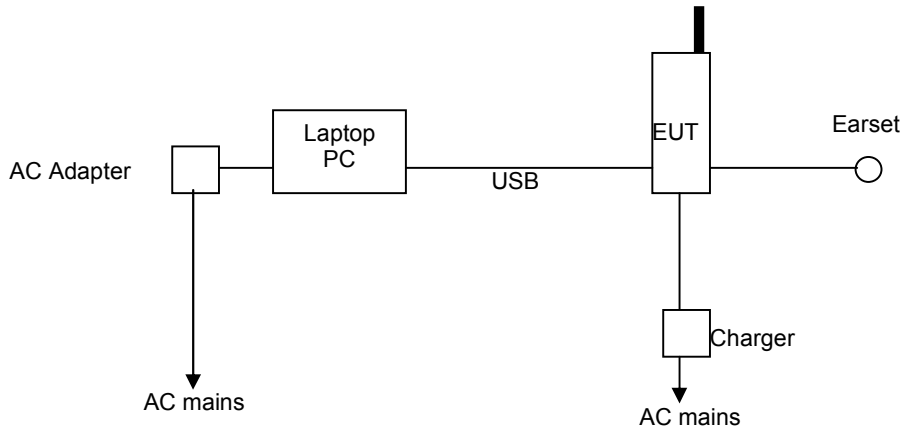

4 Overview of Technical requirements

The following test items show that the correspondence of test items and the performance of output power and its spectrum transmission are in accordance to the technical description.

The test results shows

☒ No deviations to the technical requirements were ascertained during the tests performed.

☐ Deviations as specified in this report were ascertained during the tests performed.

4.1 Conducted Emissions

Reference : FCC 47 CFR Part 15 Radio Frequency devices _Sep. 20, 2007
Clause : Section 15.107 Conducted limits

Technical requirements

An intentional radiator that is designed to be connected to the public utility (AC) power line, the radio frequency voltage that is conducted back onto the AC power line on any frequency or frequencies within the band 150 kHz to 30 MHz shall not exceed the limits in the section §15.107 (a) .

Result of test

☒ Pass

☐ Fail

☐ Already tested(refer to test report no._____)

☐ Not applicable

Remarks : None

4.2 Radiated Emissions

Reference : FCC 47 CFR Part 15 Radio Frequency devices_ Sep. 20, 2007
Clause : Section 15.109 Radiated emission limits

Technical requirements

The emissions from an intentional radiator shall not exceed the field strength levels specified in the table of §15.109 (a).

Result of test

☒ Pass

☐ Fail

☐ Already tested(refer to test report no._____)

☐ Not applicable

Remarks : None

5 Test Results

5.1 Conducted Emissions Test

1	**TEST:** Limits of mains terminal disturbance voltage	
Method	Measurements were made on a ground plane that extends 1-meter minimum beyond all sides of the system under test. All power was connected to the system through Artificial Mains Network (AMN). Conducted voltage measurements on mains lines were made at the output of the AMN.	—

Basic Standard	ANSI C63.4:2003 , Section 15.107(a)	
Parameters required prior to the test	Laboratory Ambient Temperature	10 to 40 °C
	Relative Humidity	10 to 90 %
Parameters recorded during the test	Laboratory Ambient Temperature	24.0°C
	Relative Humidity	45.0%
	Frequency range on each side of line	Measurement Point
Fully configured sample scanned over the following frequency range	150kHz to 30MHz	AC Input – LI , N

Limits - Class A

Frequency (MHz)	Limit (dBµV)			
	Quasi-Peak	Result	Average	Result
0.15 to 0.50	79	N/A	66	N/A
0.50 to 30	73	N/A	60	N/A

Limits – FCC 47 CFR Part 15 §15.107 (a)

Frequency (MHz)	Limit (dBµV)			
	Quasi-Peak	Result	Average	Result
0.15 to 0.50	66 to 56	**PASS**	56 to 46	**PASS**
0.50 to 5	56	**PASS**	46	**PASS**
5 to 30	60	**PASS**	50	**PASS**

Supplementary information: Pre test with Peak and final measurement with Quasi-peak and Average detectors.

Conducted Emissions EUT Configuration Settings

Power Interface Mode # (See Section 3.3)	EUT Configurations Mode # (See Section 3.6)	EUT Operation Mode # (See 3.4)
4	1	1
Supplementary information:		

Conducted Emissions Test Equipment

Description	Manufacturer	Model	Identifier	Cal. Due
Test Receiver	Rohde & Schwarz	ESIB26	100359	2009.05.26
LISN	Rohde & Schwarz	ESH2-Z5	100146	2009.03.28

Figure 1. Test Setup for Conducted Emissions

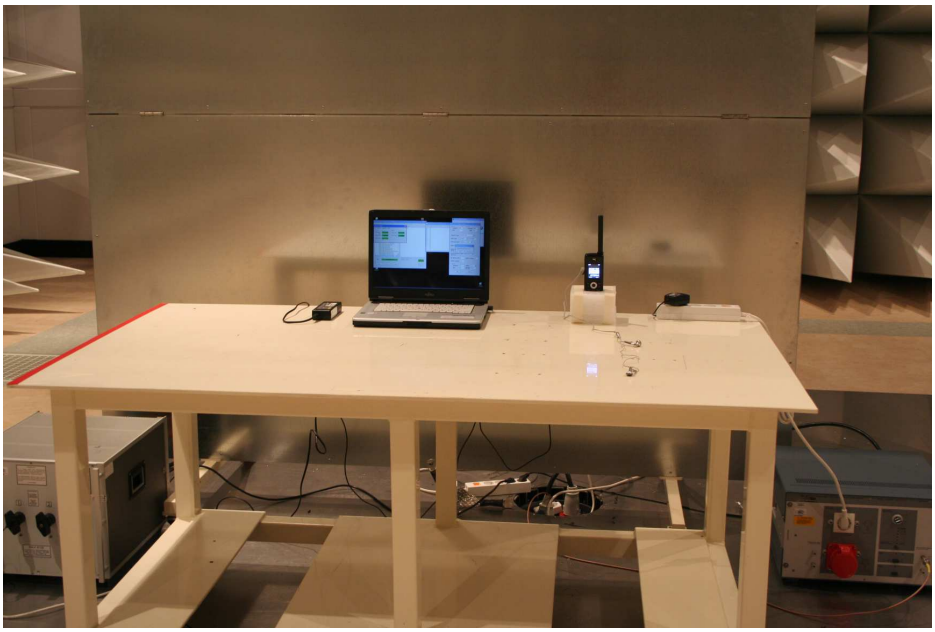

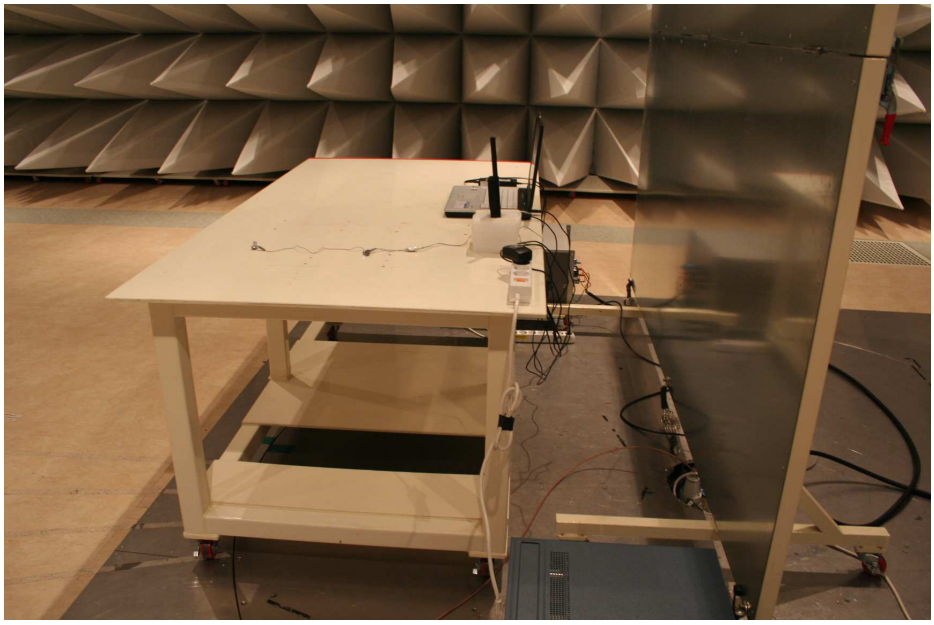

Figure 2-1. Conducted Emissions Graph

Conducted Emission Test_ Line : L1

Scan Setup: Voltage with ESH3-Z5 fin [EMI conducted]

Hardware Setup: Voltage with ESH3-Z5

Level Unit: dBuìV

Subrange	Detectors	IF Bandwidth	Meas. Time	Receiver
9kHz - 150kHz	QuasiPeak; Average	200Hz	1s	Receiver
150kHz - 30MHz	QuasiPeak; Average	9kHz	3s	Receiver

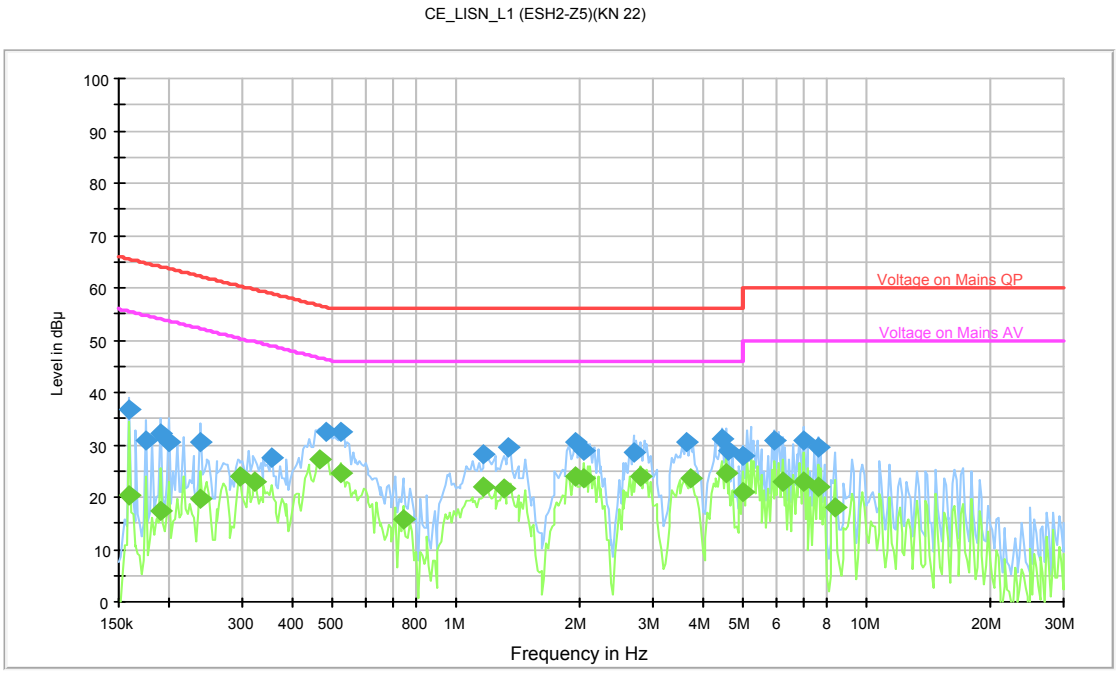

Figure 2-2. Conducted Emissions Graph

Conducted Emission Test_Line : Neutral

Scan Setup: Voltage with ESH3-Z5 fin [EMI conducted]

Hardware Setup: Voltage with ESH3-Z5
Level Unit: dBuìV

Subrange	Detectors	IF Bandwidth	Meas. Time	Receiver
9kHz - 150kHz	QuasiPeak; Average	200Hz	1s	Receiver
150kHz - 30MHz	QuasiPeak; Average	9kHz	3s	Receiver

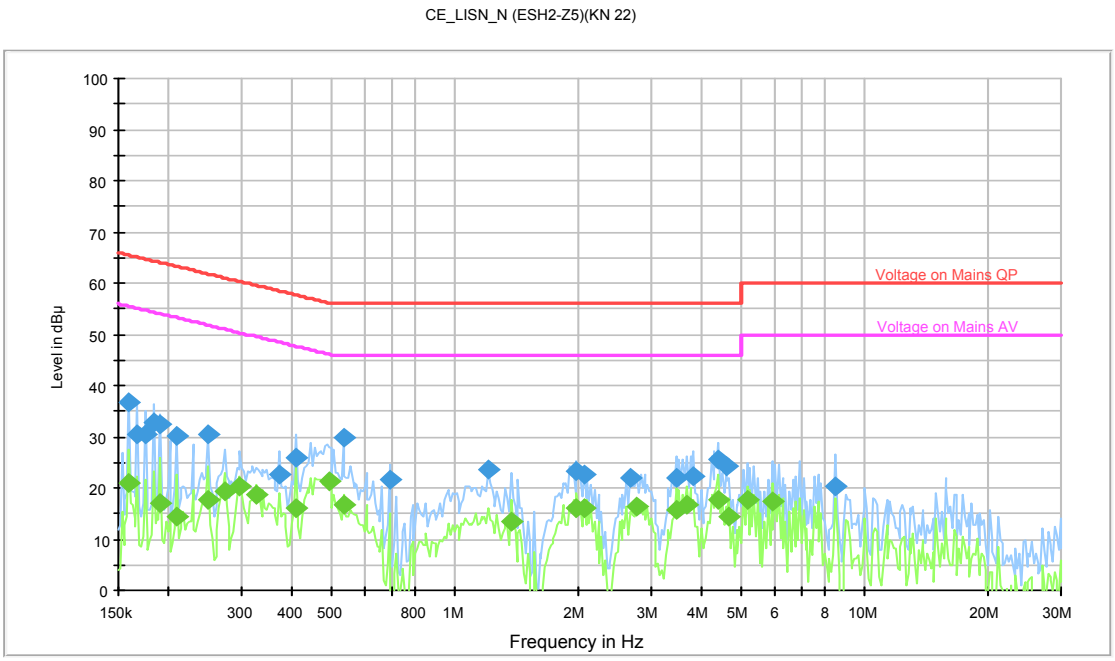

Table 1. Conducted Emissions Data Table

Communication link mode : Center channel of the SAT. Tx band

Test Frequency (MHz)	Correction Factor		Reading value (dBuV)		Line	Level (dBuV)		Limit (dBuV)		Margin (dB)	
	Cable	LISN	QP	AV		QP	AV	QP	AV	QP	AV
0.16	10.06	0.08	28.76	10.96	N	38.90	21.10	65.30	55.30	26.40	34.20
0.20	10.06	0.08	26.76	9.86	N	36.90	20.00	63.80	53.80	26.90	33.80
0.21	10.06	0.08	24.06	8.66	N	34.20	18.80	63.00	53.00	28.80	34.20
0.23	10.07	0.08	25.45	14.55	L1	35.60	24.70	62.40	52.40	26.80	27.70
1.84	10.16	0.12	24.22	15.22	L1	34.50	25.50	56.00	46.00	21.50	20.50
2.61	10.21	0.14	23.35	15.75	L1	33.70	26.10	56.00	46.00	22.30	19.90
4.88	10.29	0.14	22.57	15.77	L1	33.00	26.20	56.00	46.00	23.00	19.80
5.72	10.33	0.19	21.88	14.38	L1	32.40	24.90	60.00	50.00	27.60	25.10
6.20	10.34	0.19	23.87	15.77	L1	34.40	26.30	60.00	50.00	25.60	23.70
7.27	10.36	0.24	19.80	10.96	N	38.90	21.10	65.30	55.30	34.90	34.20

Note:
1. If no frequencies are specified in the tables, measurement for quasi-peak or average was not necessary.

5.2 Radiated Emissions Test

	TEST: Limits for Radiated emissions	
Method	Measurements were made in a 10-meter semi-anechoic chamber that complies to CISPR 16/ANSI C63.4. Preliminary (peak) measurements were performed at an antenna to EUT separation distance of 3meter. The EUT was rotated 360° about its azimuth with the receive antenna located at 1, 2, 3 and 4 meter heights in both horizontal and vertical polarities. Final measurements (quasi-peak or average as noted) were then performed by rotating the EUT 360° and adjusting the receive antenna height from 1 to 4-meters. All frequencies were investigated in both horizontal and vertical antenna polarity, where applicable.	

Basic Standards	ANSI C63.4:2003 , Section 15.209	
Parameters required prior to the test	Laboratory Ambient Temperature	10 to 40 °C
	Relative Humidity	10 to 90 %
Parameters recorded during the test	Laboratory Ambient Temperature	23.0°C
	Relative Humidity	47.0 %
	Frequency range	Measurement Point
Fully configured sample scanned over the following frequency range	30MHz – 1GHz	3 meter distance

Limits – Section 15.109(a)

Frequency (MHz)	Limit	
	Quasi-Peak(uV/m)	Quasi-Peak(dBuV/m)
30–88	100	40.0
88–216	150	43.5
216–960	200	46.0
Above 960	500	54.0

EUT Configuration Settings

Power Interface Mode # (See Section 3.3)	EUT Configurations Mode # (See Section 3.6)	EUT Operation Mode # (See 3.4)
4	1	1
Supplementary information:		

Radiated Emissions Test Equipment

Description	Manufacturer	Model	Identifier	Cal. Due
Test Receiver	Rohde & Schwarz	ESIB26	100359	2009.05.26
BiconiLog ANT	CBL6112D	Schaffner	21784	2010.04.21
Horn Antenna	EMCO	3115	00056768	2010.03.24
Position controller	Inn-co	CO 2000	11261105/L	-
Antenna Mast	Inn-co	MA 4000	-	-
Turntable	Inn-co	DT 3000	-	-

Figure 3. Test Setup for Radiated Emission

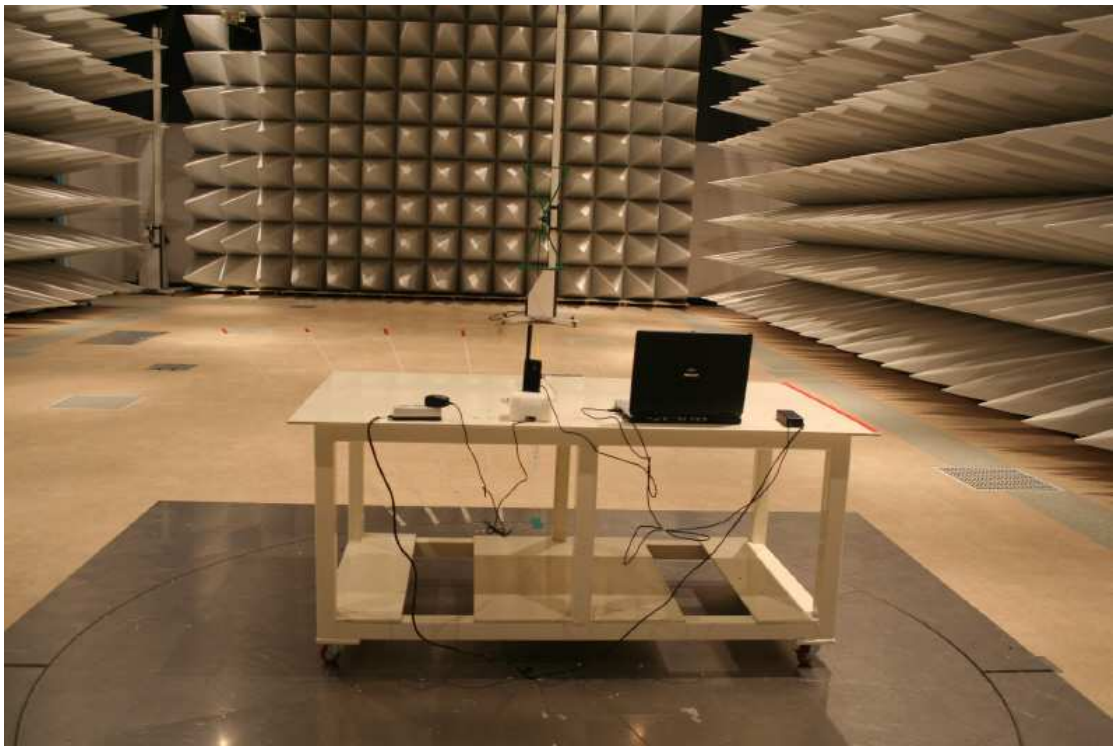

Table 2. Radiated emissions data

Scan Setup: Electric Field Strength

Hardware Setup: Communication link at center channel
Level Unit: dBuìV/m

Subrange	**Detectors**	**IF Bandwidth**	**Meas. Time**	**Receiver**
30MHz - 1GHz	QuasiPeak	120kHz	1s	Receiver
1 GHz - 18 GHz	Average	1 MHz	1s	Receiver

Communication link at Tx center channel

Frequency Reading (MHz)	Reading (dBuV/m)	Polarization	Ant. Factor (dB)	Cable Loss (dB)	Limit (dBuV/m)	Emission Level (dBuV/m)	Margin (dB)
144.69	4.70	H	10.90	1.80	30.00	17.40	12.60
193.55	9.70	H	8.60	2.20	30.00	20.50	9.50
206.89	15.80	V	8.80	2.30	30.00	26.90	3.10
246.00	19.10	V	11.40	2.50	37.00	33.00	4.00

Supplementary information:

-. The correction value has been included the Emission level measured value with offset
-. Correction = Cable loss + Antenna Factor
-. No emissions more than 20 dB below to the limit were reported.
-. The EUT was positioned to 3 axis on the table and Front vertical (X-axis) was the worst case position and reported