FCC Test Report

FCC ID	**:**	**U28OMSTREAMER**
Equipment	**:**	**Audio Streaming Module XM**
Model No.	**:**	**Audio Streaming Module XM**
Applicant	**:**	**Oticon A/S**
Address	**:**	**Kongebakken 9 DK-2765 Smoerum, Denmark**
Standard	**:**	**47 CFR FCC Part 15.223**
Received Date	**:**	**Nov. 13, 2018**
Tested Date	**:**	**Nov. 13, 2018 ~ Mar. 13, 2019**

We, International Certification Corp., would like to declare that the tested sample has been evaluated and in compliance with the requirement of the above standards. The test results contained in this report refer exclusively to the product. It may be duplicated completely for legal use with the approval of the applicant. It shall not be reproduced except in full without the written approval of our laboratory.

Reviewed by: **Approved by:**

Along Chen / Assistant Manager **Gary Chang / Manager**

Testing Laboratory 2732

Table of Contents

1 GENERAL DESCRIPTION 5

1.1 Information 5
1.2 Local Support Equipment List 6
1.3 Test Setup Chart 6
1.4 The Equipment List 8
1.5 Test Standards 11
1.6 Deviation from Test Standard and Measurement Procedure 11
1.7 Measurement Uncertainty 11

2 TEST CONFIGURATION 12

2.1 Testing Condition 12
2.2 The Worst Test Modes and Channel Details 12

3 TRANSMITTER TEST RESULTS 13

3.1 Conducted Emissions 13
3.2 6dB and Occupied Bandwidth 16
3.3 Radiated Emissions 18

4 TEST LABORATORY INFORMATION 32

Release Record

Report No.	Version	Description	Issued Date
FR8N1301	Rev. 01	Initial issue	Feb. 11, 2019
FR8N1301	Rev. 02	1. Update to the data from radiated emissions 2. Added Conducted Emissions data	Mar. 14, 2019

Summary of Test Results

FCC Rules	Test Items	Measured	Result
15.207	Conducted Emissions	Meet the requirement of limit	Pass
15.223(a)(b)	Radiated Emissions	Meet the requirement of limit	Pass
15.223(a)	6dB Bandwidth	Meet the requirement of limit	Pass
15.203	Antenna Requirement	Meet the requirement of limit	Pass

Declaration of Conformity:
The test results with all measurement uncertainty excluded are presented in accordance with the regulation limits or requirements declared by manufacturers.
Comments and Explanations:
The declared values of gain for EUT presented in the report are provided by the manufacturer, and the manufacturer takes all the responsibilities for the accuracy of the gain.

1 General Description

1.1 Information

1.1.1 Specification of the Equipment under Test (EUT)

RF General Information			
Frequency Range (MHz)	**Modulation**	**Ch. Frequency (MHz)**	**Channel Number**
3.84	ASK	3.84	1

1.1.2 Antenna Details

Ant. No.	Type	Gain (dBi)	Connector	Remark
1	Ferrite coil antenna	---	---	---
2	Neckloop antenna	---	---	---

1.1.3 EUT Operational Condition

Supply Voltage	3.7Vdc from battery		
Operational Voltage	☒ Vnom (3.7 V)	☒ Vmax (4.1 V)	☒ Vmin (3.45 V)

1.1.4 Accessories

Accessories		
No.	**Equipment**	**Description**
1	AC Adapter	Brand: PHIHONG Model: AM05E-050A Power Rating: I/P: 100-240Vac, 50/60Hz, 0.2A O/P: 5Vdc, 1A Power Line: 1.8m non-shielded cable without core
2	Battery	Brand: ZHUHAI COSLIGHT BATTERY CO., LTD Model: CA422258 Power Rating: I/P: 3.7Vdc, 520mAh
3	USB charger cable	1.2m shielded without core
4	3.5mm mini jack stereo cable	1m non-shielded without core
5	3.5mm headset splitter cable	0.14m non-shielded without core
6	Neck loop-long	0.81m non-shielded without core
7	Neck loop-medium	0.66m non-shielded without core

1.2 Local Support Equipment List

Support Equipment List					
No.	**Equipment**	**Brand**	**Model**	**FCC ID**	**Remarks**
1	IPAD	Apple	A1446	JF0GT	---

1.3 Test Setup Chart

Test Setup Diagram (Ferrite coil antenna, battery mode)

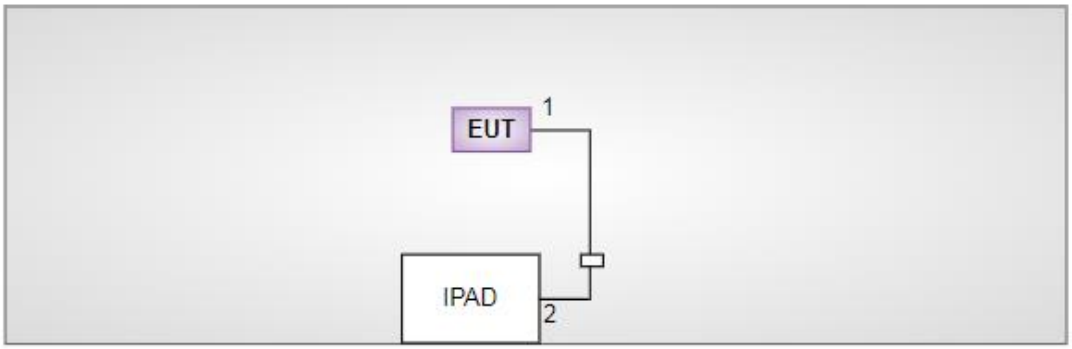

No.	Signal cable / Length (m)
1	3.5mm mini jack stereo cable, 1m non-shielded.
2	3.5mm headset splitter cable, 0.14m non-shielded.

Test Setup Diagram (Neckloop antenna, battery mode)

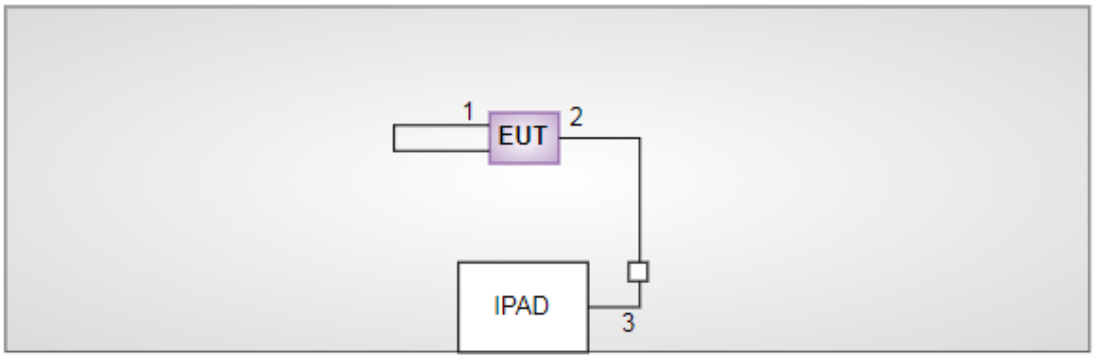

No.	Signal cable / Length (m)
1	Neck loop- long, 0.81m non-shielded.
2	3.5mm mini jack stereo cable, 1m non-shielded.
3	3.5mm headset splitter cable, 0.14m non-shielded.

Test Setup Diagram (Ferrite coil antenna, adapter mode)	

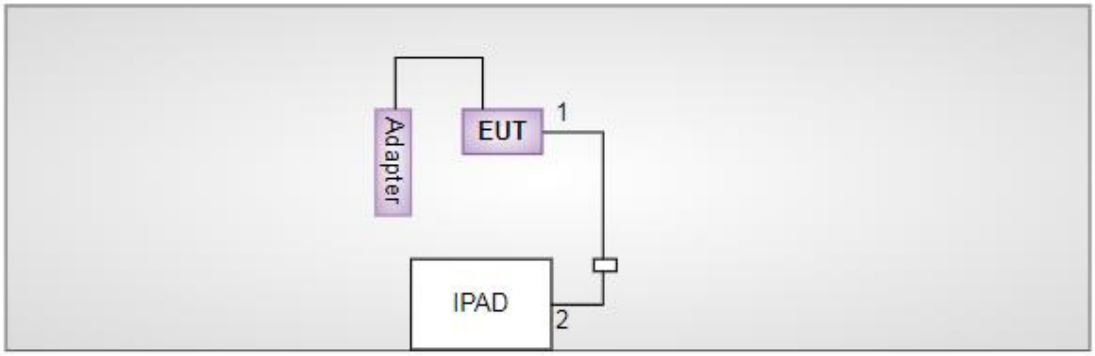

No.	Signal cable / Length (m)
1	3.5mm mini jack stereo cable, 1m non-shielded.
2	3.5mm headset splitter cable, 0.14m non-shielded.

Test Setup Diagram (Neckloop antenna, adapter mode)	

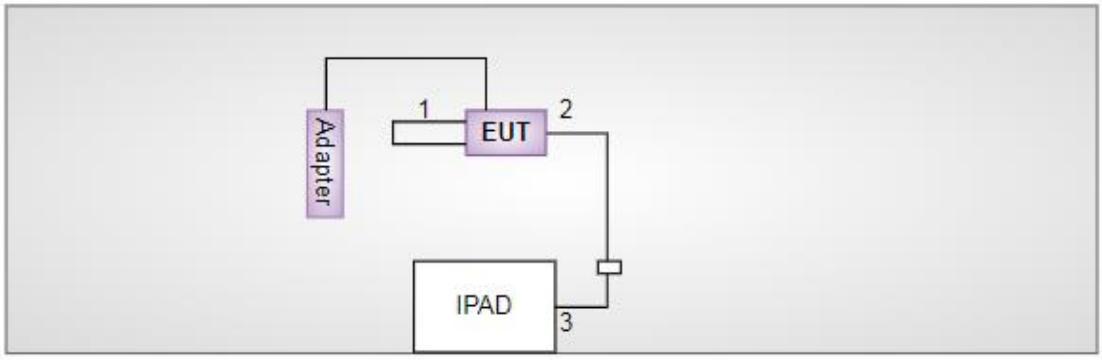

No.	Signal cable / Length (m)
1	Neck loop- long, 0.81m non-shielded.
2	3.5mm mini jack stereo cable, 1m non-shielded.
3	3.5mm headset splitter cable, 0.14m non-shielded.

1.4 The Equipment List

Test Item	Conducted Emission				
Test Site	Conduction room 1 / (CO01-WS)				
Tested Date	Mar. 11, 2019				
Instrument	**Manufacturer**	**Model No.**	**Serial No.**	**Calibration Date**	**Calibration Until**
Receiver	R&S	ESR3	101657	Jan. 08, 2019	Jan. 07, 2020
LISN	SCHWARZBECK	Schwarzbeck 8127	8127-667	Nov. 05, 2018	Nov. 04, 2019
RF Cable-CON	Woken	CFD200-NL	CFD200-NL-001	Oct. 23, 2018	Oct. 23, 2019
Measurement Software	AUDIX	e3	6.120210k	NA	NA
Note: Calibration Interval of instruments listed above is one year.					

Test Item	Radiated Emission				
Test Site	966 chamber 3 / (03CH03-WS)				
Tested Date	Jan. 28 ~ Mar. 05, 2019				
Instrument	**Manufacturer**	**Model No.**	**Serial No.**	**Calibration Date**	**Calibration Until**
Spectrum Analyzer	R&S	FSV40	101499	Jan. 07, 2019	Jan. 06, 2020
Receiver	R&S	ESR3	101658	Dec. 11, 2018	Dec. 10, 2019
Bilog Antenna	SCHWARZBECK	VULB9168	VULB9168-685	Apr. 19, 2018	Apr. 18, 2019
Horn Antenna 1G-18G	SCHWARZBECK	BBHA 9120 D	BBHA 9120 D 1206	Jan. 07, 2019	Jan. 06, 2020
Horn Antenna 18G-40G	SCHWARZBECK	BBHA 9170	BBHA 9170517	Nov. 15, 2018	Nov. 14, 2019
Loop Antenna	R&S	HFH2-Z2	100330	Nov. 09, 2018	Nov. 08, 2019
Loop Antenna Cable	KOAX KABEL	101354-BW	101354-BW	Oct. 08, 2018	Oct. 07, 2019
Preamplifier	EMC	EMC02325	980187	Aug. 24, 2018	Aug. 23, 2019
Preamplifier	Agilent	83017A	MY53270014	Aug. 09, 2018	Aug. 08, 2019
Preamplifier	EMC	EMC184045B	980192	Aug. 09, 2018	Aug. 08, 2019
RF cable-3M	HUBER+SUHNER	SUCOFLEX104	MY22620/**4**	Oct. 01, 2018	Sep. 30, 2019
RF cable-8M	EMC	EMC104-SM-SM-8000	181107	Oct. 01, 2018	Sep. 30, 2019
RF cable-1M	HUBER+SUHNER	SUCOFLEX104	MY22624/4	Oct. 01, 2018	Sep. 30, 2019
LF cable-0.8M	EMC	EMC8D-NM-NM-800	EMC8D-NM-NM-800-001	Oct. 01, 2018	Sep. 30, 2019
LF cable-3M	EMC	EMC8D-NM-NM-3000	131103	Oct. 01, 2018	Sep. 30, 2019
LF cable-13M	EMC	EMC8D-NM-NM-13000	131104	Oct. 01, 2018	Sep. 30, 2019
Measurement Software	AUDIX	e3	6.120210g	NA	NA
Note: Calibration Interval of instruments listed above is one year.					

Test Item	Radiated Emissions				
Test Site	(10CH01-HY)				
Tested Date	Mar. 13, 2019				
Instrument	**Manufacturer**	**Model No.**	**Serial No.**	**Calibration Date**	**Calibration Until**
Turn Table	EM Electronics	EM 1000	060546	NA	NA
Receiver	R&S	ESR3	101658	Dec. 11, 2018	Dec. 10, 2019
Loop Antenna	R&S	HFH2-Z2	100330	Nov. 09, 2018	Nov. 08, 2019
Loop Antenna Cable	KOAX KABEL	101354-BW	101354-BW	Oct. 08, 2018	Oct. 07, 2019
Software	AUDIX	e3	6.120210g	NA	NA
Note: Calibration Interval of instruments listed above is one year.					

Test Item	Radiated Emission				
Test Site	966 chamber 3 / (03CH03-WS)				
Tested Date	Nov. 13, 2018				
Instrument	**Manufacturer**	**Model No.**	**Serial No.**	**Calibration Date**	**Calibration Until**
Spectrum Analyzer	R&S	FSV40	101499	Jan. 03, 2018	Jan. 02, 2019
Receiver	R&S	ESR3	101658	Nov. 20, 2017	Nov. 19, 2018
Bilog Antenna	SCHWARZBECK	VULB9168	VULB9168-685	Apr. 19, 2018	Apr. 18, 2019
Horn Antenna 1G-18G	SCHWARZBECK	BBHA 9120 D	BBHA 9120 D 1206	Jan. 18, 2018	Jan. 17, 2019
Horn Antenna 18G-40G	SCHWARZBECK	BBHA 9170	BBHA 9170517	Nov. 23, 2017	Nov. 22, 2018
Loop Antenna	R&S	HFH2-Z2	100330	Nov. 09, 2018	Nov. 08, 2019
Loop Antenna Cable	KOAX KABEL	101354-BW	101354-BW	Dec. 07, 2017	Dec. 06, 2018
Preamplifier	EMC	EMC02325	980187	Aug. 24, 2018	Aug. 23, 2019
Preamplifier	Agilent	83017A	MY53270014	Aug. 09, 2018	Aug. 08, 2019
Preamplifier	EMC	EMC184045B	980192	Aug. 09, 2018	Aug. 08, 2019
RF cable-3M	EMC	EMC104-SM-SM-8000	181107	Oct. 30, 2018	Oct. 29, 2019
RF cable-8M	HUBER+SUHNER	SUCOFLEX104	MY32487/4	Oct. 30, 2018	Oct. 29, 2019
RF cable-1M	HUBER+SUHNER	SUCOFLEX104	MY22624/4	Oct. 30, 2018	Oct. 29, 2019
LF cable-0.8M	EMC	EMC8D-NM-NM-800	EMC8D-NM-NM-800-001	Oct. 30, 2018	Oct. 29, 2019
LF cable-3M	EMC	EMC8D-NM-NM-3000	131103	Oct. 30, 2018	Oct. 29, 2019
LF cable-13M	EMC	EMC8D-NM-NM-13000	131104	Oct. 30, 2018	Oct. 29, 2019
Measurement Software	AUDIX	e3	6.120210g	NA	NA
Bluetooth Tester	R&S	CBT	100959	Sep. 24, 2018	Sep. 23, 2019
Note: Calibration Interval of instruments listed above is one year.					

Test Item	RF Conducted				
Test Site	(TH01-WS)				
Tested Date	Nov. 13, 2018				
Instrument	**Manufacturer**	**Model No.**	**Serial No.**	**Calibration Date**	**Calibration Until**
Spectrum Analyzer	R&S	FSV40	101063	Apr. 16, 2018	Apr. 15, 2019
Power Meter	Anritsu	ML2495A	1241002	Oct. 09, 2018	Oct. 08, 2019
Power Sensor	Anritsu	MA2411B	1207366	Oct. 09, 2018	Oct. 08, 2019
Bluetooth Tester	R&S	CBT	100959	Sep. 24, 2018	Sep. 23, 2019
DC POWER SOURCE	GW INSTEK	GPC-6030D	EM892433	Oct. 25, 2018	Oct. 24, 2019
Measurement Software	Sporton	Sporton_1	1.3.30	NA	NA
Note: Calibration Interval of instruments listed above is one year.					

Test Item	Radiated Emissions				
Test Site	(10CH02-HY)				
Tested Date	Nov. 14, 2018				
Instrument	**Manufacturer**	**Model No.**	**Serial No.**	**Calibration Date**	**Calibration Until**
Turn Table	EM Electronics	EM 1000	060546	NA	NA
Receiver	R&S	ESR3	102051	May 03, 2018	May 02, 2019
Loop Antenna	R&S	HFH2-Z2	100330	Nov. 09, 2018	Nov. 08, 2019
RF Cable-R10m	HUBER+SUHNER	RG223/U + RG8/U	CB026-DOOR	Nov. 11, 2018	Nov. 10, 2019
Software	AUDIX	e3	6.120210g	NA	NA
Note: Calibration Interval of instruments listed above is one year.					

1.5 Test Standards

According to the specification of EUT, the EUT must comply with following standards and KDB documents.

47 CFR FCC Part 15.223
ANSI C63.10-2013

1.6 Deviation from Test Standard and Measurement Procedure

None

1.7 Measurement Uncertainty

ISO/IEC 17025 requires that an estimate of the measurement uncertainties associated with the emissions test results be included in the report. The measurement uncertainties given below are based on a 95% confidence level (based on a coverage factor (k=2)

Measurement Uncertainty	
Parameters	**Uncertainty**
Bandwidth	±34.134 Hz
Conducted power	±0.808 dB
AC conducted emission	±2.92 dB
Radiated emission ≤ 1GHz	±3.66 dB
Radiated emission > 1GHz	±5.67 dB

2 Test Configuration

2.1 Testing Condition

Testing Location			
☒	ICC Lab	ADD :	No.3-1, Lane 6, Wen San 3rd St., Kwei Shan District, Tao Yuan City 333, Taiwan (R.O.C.)
		TEL :	886-3-271-8666 FAX : 886-3-318-0155
☒	Sporton Lab	ADD :	No. 52, Huaya 1st Rd., Guishan Dist., Taoyuan City, Taiwan (R.O.C.)
		TEL :	886-3-327-3456 FAX : 886-3-327-0973

Test Item	Test Site	Ambient Condition	Tested By
AC Conduction	CO01-WS	24°C / 64%	Alex Tsai
Radiated Emission > 30 MHz	03CH03-WS	24°C / 63-64% 24°C / 63%	Aska Huang Roger Lu
RF Conducted	TH01-WS	24°C / 62%	Roger Lu
Radiated Emission ≤ 30 MHz	10CH02-HY*	24°C / 62%	Jack Li
Radiated Emission ≤ 30 MHz	10CH01-HY*	24°C / 62%	Jack Li

- FCC Designation No.: TW0009
- FCC site registration No.: 207696
- IC site registration No.: 10807A-1

Note: * ICC lab subcontracts this test item to Sporton Lab (TAF:1190).
Sporton Lab is a TAF accreditation test firm and also is an approved provider of ICC lab.

2.2 The Worst Test Modes and Channel Details

Test item	Mode	Test Frequency (MHz)	Test Configuration
Conducted Emissions	ASK	3.84	4
Radiated Emissions	ASK	3.84	1, 2, 3, 4
6dB bandwidth	ASK	3.84	2

1) The EUT was pretested with 3 orientations placed on the table for the radiated emission measurement – X, Y, and Z-plane. The **Z-plane** results were found as the worst case and were shown in this report.
2) Two antennas are used for 3.84 MHz. The antennas are selected to perform radiated emission test with Bluetooth antenna as below test configurations.

Configuration 1 :Ferrite coil antenna: 3.84 MHz / Inverted F: Bluetooth, battery mode

Configuration 2 : Neckloop antenna 0.81m: 3.84 MHz / Inverted F: Bluetooth, battery mode

Configuration 3 :Ferrite coil antenna: 3.84 MHz / Inverted F: Bluetooth, adapter mode

Configuration 4 : Neckloop antenna 0.81m: 3.84 MHz / Inverted F: Bluetooth, adapter mode

3 Transmitter Test Results

3.1 Conducted Emissions

3.1.1 Limit of Conducted Emissions

Conducted Emissions Limit		
Frequency Emission (MHz)	**Quasi-Peak**	**Average**
0.15-0.5	66 - 56 *	56 - 46 *
0.5-5	56	46
5-30	60	50
Note 1: * Decreases with the logarithm of the frequency.		

3.1.2 Test Procedures

1. The device is placed on a test table, raised 80 cm above the reference ground plane. The vertical conducting plane is located 40 cm to the rear of the device.
2. The device is connected to line impedance stabilization network (LISN) and other accessories are connected to other LISN. Measured levels of AC power line conducted emission are across the 50 Ω LISN port.
3. AC conducted emission measurements is made over frequency range from 150 kHz to 30 MHz.
4. This measurement was performed with AC 120V / 60Hz.

3.1.3 Test Setup

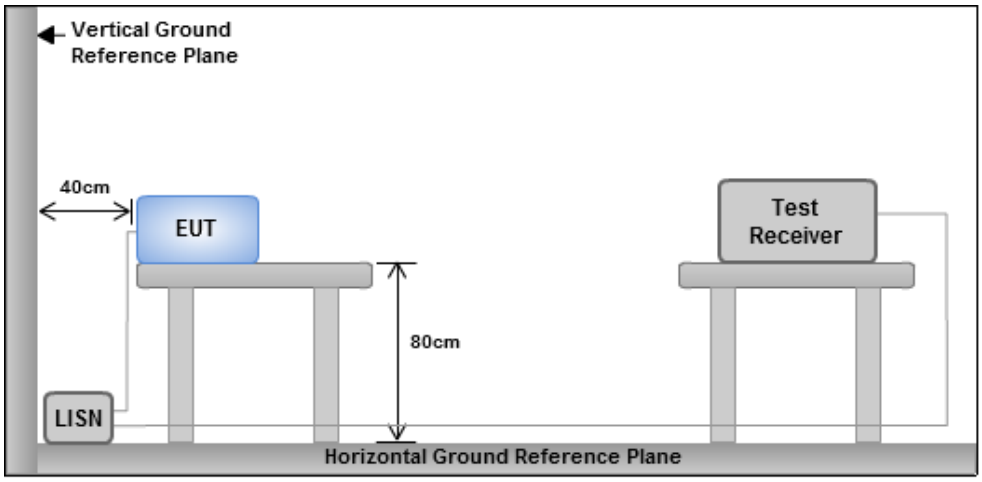

Note: 1. Support units were connected to second LISN.
2. Both of LISNs (AMN) are 80 cm from EUT and at least 80 cm from other units and other metal planes

3.1.4 Test Result of Conducted Emissions

Power Phase	Line	Test Freq. (MHz)	3.84

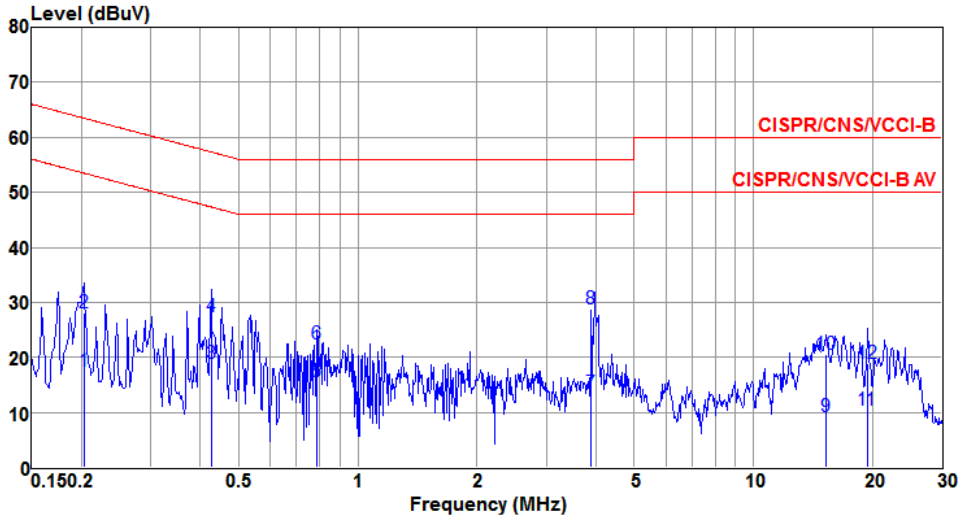

	Freq MHz	Level dBuV	Limit Line dBuV	Over Limit dB	Read Level dBuV	LISN factor dB	cable loss dB	Remark
1	0.203	17.44	53.49	-36.05	17.12	0.06	0.07	Average
2	0.203	28.02	63.49	-35.47	27.70	0.06	0.07	QP
3	0.426	18.98	47.33	-28.35	18.58	0.06	0.08	Average
4	0.426	27.28	57.33	-30.05	26.88	0.06	0.08	QP
5	0.788	15.48	46.00	-30.52	15.03	0.07	0.09	Average
6	0.788	22.54	56.00	-33.46	22.09	0.07	0.09	QP
7	3.897	13.38	46.00	-32.62	12.62	0.11	0.27	Average
8*	3.897	28.71	56.00	-27.29	27.95	0.11	0.27	QP
9	15.226	9.25	50.00	-40.75	8.01	0.22	0.56	Average
10	15.226	20.55	60.00	-39.45	19.31	0.22	0.56	QP
11	19.428	10.36	50.00	-39.64	8.92	0.24	0.60	Average
12	19.428	18.95	60.00	-41.05	17.51	0.24	0.60	QP

Note 1: Level (dBuV) = Read Level (dBuV) + LISN Factor (dB) + Cable Loss (dB).
2: Over Limit (dB) = Level (dBuV) – Limit Line (dBuV).

Power Phase	Neutral	Test Freq. (MHz)	3.84

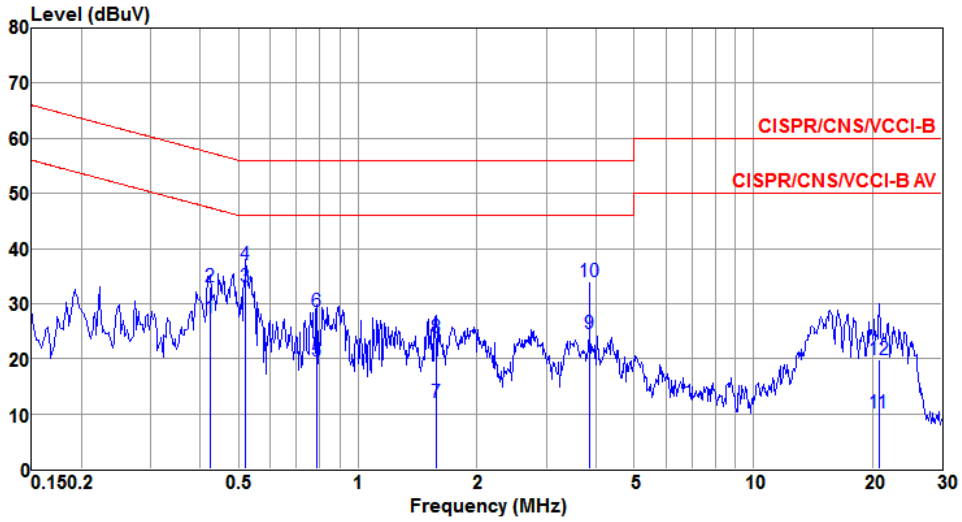

	Freq MHz	Level dBuV	Limit Line dBuV	Over Limit dB	Read Level dBuV	LISN factor dB	cable loss dB	Remark
1	0.424	27.45	47.37	-19.92	27.19	0.05	0.08	Average
2	0.424	32.97	57.37	-24.40	32.71	0.05	0.08	QP
3*	0.521	33.01	46.00	-12.99	32.72	0.05	0.09	Average
4	0.521	37.10	56.00	-18.90	36.81	0.05	0.09	QP
5	0.788	19.50	46.00	-26.50	19.15	0.06	0.09	Average
6	0.788	28.56	56.00	-27.44	28.21	0.06	0.09	QP
7	1.577	12.12	46.00	-33.88	11.67	0.07	0.14	Average
8	1.577	23.90	56.00	-32.10	23.45	0.07	0.14	QP
9	3.840	24.51	46.00	-21.49	23.89	0.09	0.27	Average
10	3.840	34.11	56.00	-21.89	33.49	0.09	0.27	QP
11	20.814	10.24	50.00	-39.76	8.87	0.27	0.61	Average
12	20.814	19.79	60.00	-40.21	18.42	0.27	0.61	QP

Note 1: Level (dBuV) = Read Level (dBuV) + LISN Factor (dB) + Cable Loss (dB).
2: Over Limit (dB) = Level (dBuV) – Limit Line (dBuV).

3.2 6dB and Occupied Bandwidth

3.2.1 Test Procedures

6dB Bandwidth

1. Set resolution bandwidth (RBW) = 2 kHz, Video bandwidth = 10 kHz.
2. Detector = Peak, Trace mode = max hold.
3. Sweep = auto couple, Allow the trace to stabilize.
4. Measure the maximum width of the emission that is constrained by the frequencies associated with the two outermost amplitude points (upper and lower) that are attenuated by 6dB relative to the maximum level measured in the fundamental emission.

Occupied Bandwidth

1. Set resolution bandwidth (RBW) = 1% ~ 5 % of OBW, Video bandwidth = 3 x RBW
2. Detector = Sample, Trace mode = max hold.
3 Sweep = auto couple, Allow the trace to stabilize.
4. Use the OBW measurement function of spectrum analyzer to measure the occupied bandwidth.

3.2.2 Test Setup

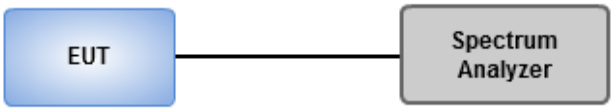

3.2.3 Test Result of 6dB and Occupied Bandwidth

Freq. (MHz)	6dB Bandwidth (kHz)	99% Occupied Bandwidth (kHz)
3.84	162.00	387.12

6dB Bandwidth	99% Occupied Bandwidth
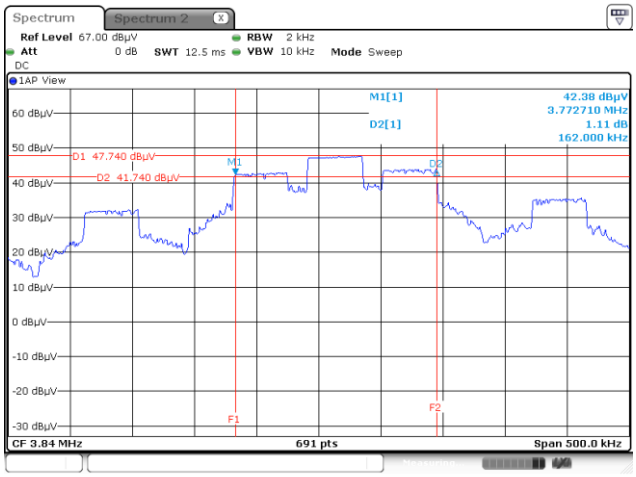	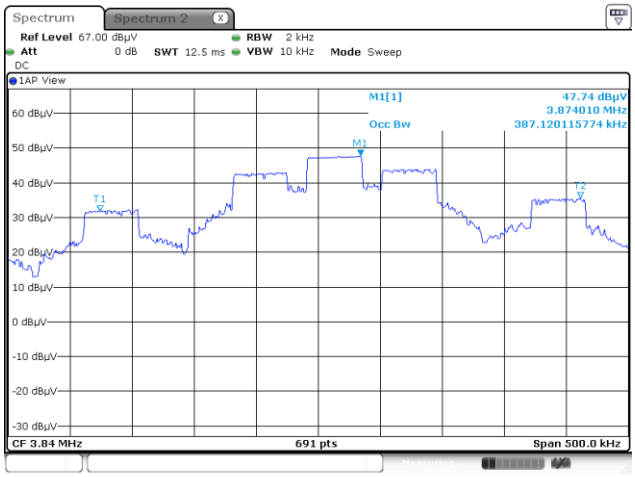

3.3 Radiated Emissions

3.3.1 Limit of Radiated Emissions

Emission within the band 1.705-10.0 MHz

☐	The field strength of any emission within the band 1.705-10.0 MHz shall not exceed 100 microvolts/meter at a distance of 30 meters
☒	If the bandwidth of the emission is less than 10% of the center frequency, the field strength shall not exceed 15 microvolts/meter or (the bandwidth of the device in kHz) divided by (the center frequency of the device in MHz) microvolts/meter at a distance of 30 meters, whichever is the higher level.

Emissions outside of the band 1.705-10.0 MHz
The field strength of emissions outside of the band 1.705-10.0 MHz shall not exceed the general radiated emission limits as below.

Restricted Band Emissions Limit			
Frequency Range (MHz)	**Field Strength (uV/m)**	**Field Strength (dBuV/m)**	**Measure Distance (m)**
0.009~0.490	2400/F(kHz)	48.5 - 13.8	300
0.490~1.705	24000/F(kHz)	33.8 - 23	30
1.705~30.0	30	29.54	30
30~88	100	40	3
88~216	150	43.5	3
216~960	200	46	3
Above 960	500	54	3

Note 1:
Qusai-Peak value is measured for frequency below 1GHz except for 9–90 kHz, 110–490 kHz frequency band. Peak and average value are measured for frequency above 1GHz. The limit on average radio frequency emission is as above table. The limit on peak radio frequency emissions is 20 dB above the maximum permitted average emission limit
Note 2:
Measurements may be performed at a distance other than what is specified provided. When performing measurements at a distance other than that specified, the results shall be extrapolated to the specified distance using an extrapolation factor as below, Frequency at or above 30 MHz: 20 dB/decade Frequency below 30 MHz: 40 dB/decade.

Limit Extrapolation

Measurement distance below 30 MHz is not at 30 meters thus the limit is extrapolated as below formula

$$FS_{\text{limit}} = FS_{\max} - 40\log\left(\frac{d_{\text{near field}}}{d_{\text{measure}}}\right) - 20\log\left(\frac{d_{\text{limit}}}{d_{\text{near field}}}\right)$$

FS_{limit} is the calculation of field strength at the limit distance, expressed in dBμV/m

$FS_{\max}$ is the measured field strength, expressed in dBμV/m

$d_{\text{near field}}$ is the λ/2π distance

d_{measure} is the distance of the measurement point from the EUT

d_{limit} is the reference limit distance

3.3.2 Test Procedures

1. Measurement is made at a semi-anechoic chamber that incorporates a turntable allowing a EUT rotation of 360°. A continuously-rotating, remotely-controlled turntable is installed at the test site to support the EUT and facilitate determination of the direction of maximum radiation for each EUT emission frequency. The EUT is placed at a height of 0.8 m test table above the ground plane.
2. Measurement is made with the antenna positioned in both the horizontal and vertical planes of polarization. The measurement antenna is varied in height (1m ~ 4m) above the reference ground plane to obtain the maximum signal strength. Distance between EUT and antenna is 3 m or 10 m.
3. This investigation is performed with the EUT rotated 360°, the antenna height scanned between 1 m and 4 m, and the antenna rotated to repeat the measurements for both the horizontal and vertical antenna polarizations.

Note:

1. 120kHz measurement bandwidth of test receiver and Quasi-peak detector is for radiated emission below 1GHz.

3.3.3 Test Setup

Radiated Emissions below 30MHz

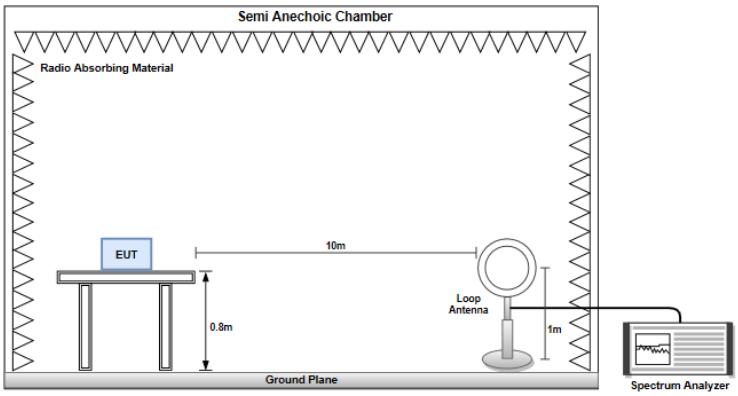

Radiated Emissions below 1 GHz

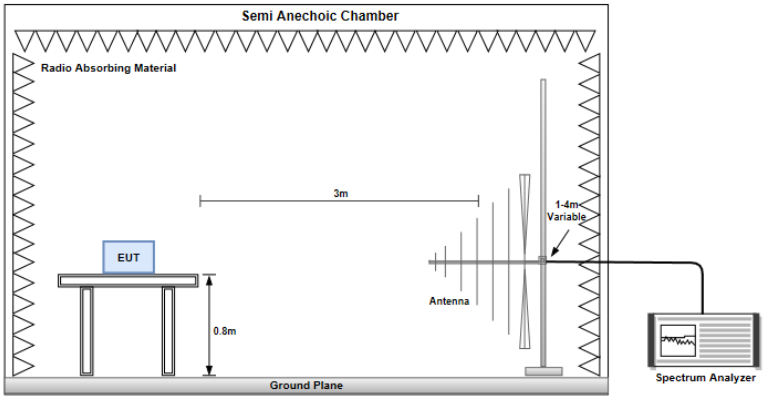

3.3.4 Transmitter Radiated Unwanted Emissions (Below 30MHz)

Test Configuration 1: Ferrite coil antenna, battery mode

Main frequency - Loop Pol. open						
Emission Freq. (MHz)	Emission Level (dBuV/m)	FS max Limit (dBuV/m)	Margin (dB)	SA Reading (dBuV)	Factor	Remark
3.84	21.34	43.94	-22.6	0.76	20.58	Average
3.84	32.81	63.94	-31.13	12.23	20.58	Peak

Main frequency - Loop Pol. close						
Emission Freq. (MHz)	Emission Level (dBuV/m)	FS max Limit (dBuV/m)	Margin (dB)	SA Reading (dBuV)	Factor	Remark
3.84	20.17	43.94	-23.77	-0.41	20.58	Average
3.84	29.69	63.94	-34.25	9.11	20.58	Peak

FCC Emission - Loop Pol. open						
Emission Freq. (MHz)	Emission Level (dBuV/m)	FS max Limit (dBuV/m)	Margin (dB)	SA Reading (dBuV)	Factor	Remark
7.68	23.02	39.08	-16.06	1.26	21.76	QP
11.52	25.68	39.08	-13.4	2.64	23.04	QP

FCC Emission - Loop Pol. close						
Emission Freq. (MHz)	Emission Level (dBuV/m)	FS max Limit (dBuV/m)	Margin (dB)	SA Reading (dBuV)	Factor	Remark
7.68	22.95	39.08	-16.13	1.19	21.76	QP
11.52	25.83	39.08	-13.25	2.79	23.04	QP

Test Configuration 2: Neckloop antenna, battery mode

Main frequency - Loop Pol. open						
Emission Freq. (MHz)	**Emission Level (dBuV/m)**	**FS max Limit (dBuV/m)**	**Margin (dB)**	**SA Reading (dBuV)**	**Factor**	**Remark**
3.84	33.71	43.94	-10.23	13.12	20.59	Average
3.84	39.47	63.94	-24.47	18.88	20.59	Peak

Main frequency - Loop Pol. close						
Emission Freq. (MHz)	**Emission Level (dBuV/m)**	**FS max Limit (dBuV/m)**	**Margin (dB)**	**SA Reading (dBuV)**	**Factor**	**Remark**
3.84	35.4	43.94	-8.54	14.81	20.59	Average
3.84	40.85	63.94	-23.09	20.26	20.59	Peak

FCC Emission - Loop Pol. open						
Emission Freq. (MHz)	**Emission Level (dBuV/m)**	**FS max Limit (dBuV/m)**	**Margin (dB)**	**SA Reading (dBuV)**	**Factor**	**Remark**
7.68	22.89	39.08	-16.19	1.12	21.77	QP
11.52	25.31	39.08	-13.77	2.26	23.05	QP

FCC Emission - Loop Pol. close						
Emission Freq. (MHz)	**Emission Level (dBuV/m)**	**FS max Limit (dBuV/m)**	**Margin (dB)**	**SA Reading (dBuV)**	**Factor**	**Remark**
7.68	22.84	39.08	-16.24	1.07	21.77	QP
11.52	25.58	39.08	-13.5	2.53	23.05	QP

Test Configuration 3: Ferrite coil antenna, adapter mode

Main frequency - Loop Pol. open						
Emission Freq. (MHz)	**Emission Level (dBuV/m)**	**FS max Limit (dBuV/m)**	**Margin (dB)**	**SA Reading (dBuV)**	**Factor**	**Remark**
3.84	21.54	43.94	-22.4	0.96	20.58	Average
3.84	33.16	63.94	-30.78	12.58	20.58	Peak

Main frequency - Loop Pol. close						
Emission Freq. (MHz)	**Emission Level (dBuV/m)**	**FS max Limit (dBuV/m)**	**Margin (dB)**	**SA Reading (dBuV)**	**Factor**	**Remark**
3.84	20.26	43.94	-23.68	-0.32	20.58	Average
3.84	30.22	63.94	-33.72	9.64	20.58	Peak

FCC Emission - Loop Pol. open						
Emission Freq. (MHz)	**Emission Level (dBuV/m)**	**FS max Limit (dBuV/m)**	**Margin (dB)**	**SA Reading (dBuV)**	**Factor**	**Remark**
7.68	23.14	39.08	-15.94	1.38	21.76	QP
11.52	25.77	39.08	-13.31	2.73	23.04	QP

FCC Emission - Loop Pol. close						
Emission Freq. (MHz)	**Emission Level (dBuV/m)**	**FS max Limit (dBuV/m)**	**Margin (dB)**	**SA Reading (dBuV)**	**Factor**	**Remark**
7.68	22.91	39.08	-16.17	1.15	21.76	QP
11.52	25.85	39.08	-13.23	2.81	23.04	QP

Test Configuration 4: Neckloop antenna, adapter mode

Main frequency - Loop Pol. open						
Emission Freq. (MHz)	**Emission Level (dBuV/m)**	**FS max Limit (dBuV/m)**	**Margin (dB)**	**SA Reading (dBuV)**	**Factor**	**Remark**
3.84	33.85	43.94	-10.09	13.26	20.59	Average
3.84	39.72	63.94	-24.22	19.13	20.59	Peak

Main frequency - Loop Pol. close						
Emission Freq. (MHz)	**Emission Level (dBuV/m)**	**FS max Limit (dBuV/m)**	**Margin (dB)**	**SA Reading (dBuV)**	**Factor**	**Remark**
3.84	35.58	43.94	-8.36	14.99	20.59	Average
3.84	40.97	63.94	-22.97	20.38	20.59	Peak

FCC Emission - Loop Pol. open						
Emission Freq. (MHz)	**Emission Level (dBuV/m)**	**FS max Limit (dBuV/m)**	**Margin (dB)**	**SA Reading (dBuV)**	**Factor**	**Remark**
7.68	23.53	39.08	-15.55	1.76	21.77	QP
11.52	26	39.08	-13.08	2.95	23.05	QP

FCC Emission - Loop Pol. close						
Emission Freq. (MHz)	**Emission Level (dBuV/m)**	**FS max Limit (dBuV/m)**	**Margin (dB)**	**SA Reading (dBuV)**	**Factor**	**Remark**
7.68	23.15	39.08	-15.93	1.38	21.77	QP
11.52	25.56	39.08	-13.52	2.51	23.05	QP

3.3.5 Transmitter Radiated Unwanted Emissions (Above 30MHz)

Polarization	Horizontal	**Test Freq. (MHz)**	3.84
Test Configuration	1		

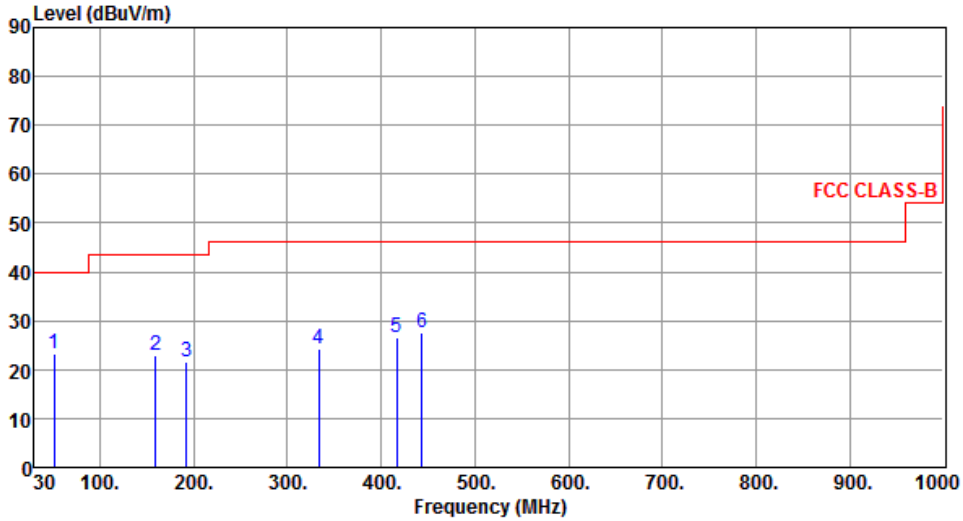

	Freq. MHz	Emission level dBuV/m	Limit dBuV/m	Margin dB	SA reading dBuV	Factor dB	Remark	ANT High cm	Turn Table deg
1	51.34	23.18	40.00	-16.82	31.19	-8.01	Peak	---	---
2	159.01	22.99	43.50	-20.51	31.30	-8.31	Peak	---	---
3	191.99	21.53	43.50	-21.97	32.35	-10.82	Peak	---	---
4	333.61	24.18	46.00	-21.82	30.94	-6.76	Peak	---	---
5	417.03	26.62	46.00	-19.38	31.11	-4.49	Peak	---	---
6	443.22	27.61	46.00	-18.39	31.42	-3.81	Peak	---	---

Note 1: Emission Level (dBuV/m) = SA Reading (dBuV/m) + Factor* (dB)
*Factor includes antenna factor , cable loss and amplifier gain
Note 2: Margin (dB) = Emission level (dBuV/m) – Limit (dBuV/m)

Polarization	Vertical	Test Freq. (MHz)	3.84
Test Configuration	1		

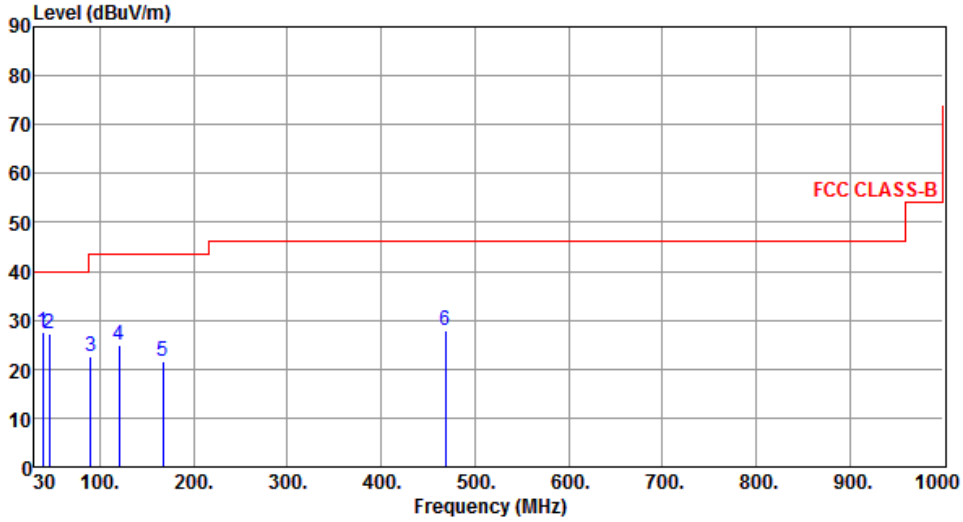

	Freq. MHz	Emission level dBuV/m	Limit dBuV/m	Margin dB	SA reading dBuV	Factor dB	Remark	ANT High cm	Turn Table deg
1	38.73	27.62	40.00	-12.38	36.24	-8.62	Peak	---	---
2	45.52	27.38	40.00	-12.62	35.47	-8.09	Peak	---	---
3	90.14	22.59	43.50	-20.91	37.06	-14.47	Peak	---	---
4	120.21	24.75	43.50	-18.75	35.63	-10.88	Peak	---	---
5	166.77	21.48	43.50	-22.02	29.96	-8.48	Peak	---	---
6	468.44	27.81	46.00	-18.19	31.13	-3.32	Peak	---	---

Note 1: Emission Level (dBuV/m) = SA Reading (dBuV/m) + Factor* (dB)
*Factor includes antenna factor , cable loss and amplifier gain
Note 2: Margin (dB) = Emission level (dBuV/m) – Limit (dBuV/m)

Polarization	Horizontal	Test Freq. (MHz)	3.84
Test Configuration	2		

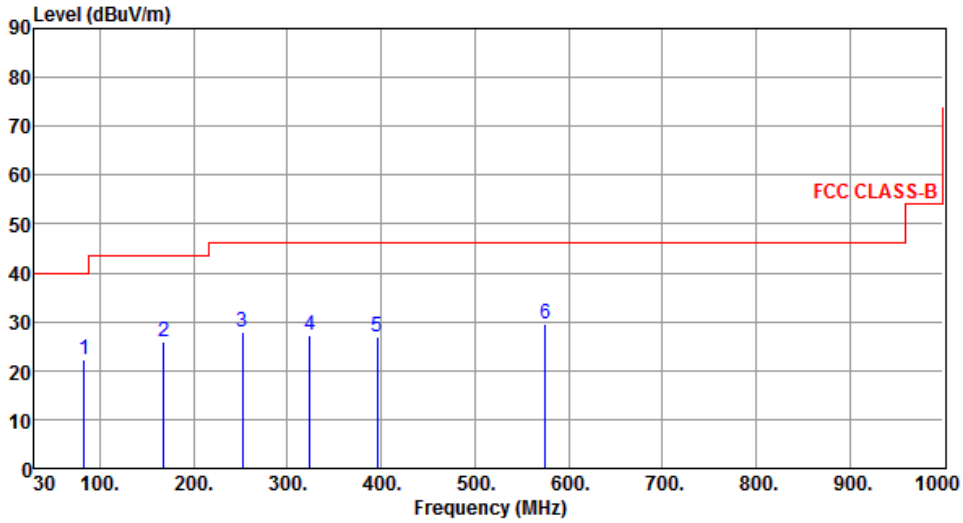

	Freq. MHz	Emission level dBuV/m	Limit dBuV/m	Margin dB	SA reading dBuV	Factor dB	Remark	ANT High cm	Turn Table deg
1	83.35	22.10	40.00	-17.90	35.55	-13.45	Peak	---	---
2	167.74	26.00	43.50	-17.50	34.43	-8.43	Peak	---	---
3	252.13	28.02	46.00	-17.98	37.24	-9.22	Peak	---	---
4	323.91	27.40	46.00	-18.60	34.46	-7.06	Peak	---	---
5	395.69	27.06	46.00	-18.94	32.16	-5.10	Peak	---	---
6	575.14	29.46	46.00	-16.54	30.60	-1.14	Peak	---	---

Note 1: Emission Level (dBuV/m) = SA Reading (dBuV/m) + Factor* (dB)
*Factor includes antenna factor , cable loss and amplifier gain
Note 2: Margin (dB) = Emission level (dBuV/m) – Limit (dBuV/m)

Polarization	Vertical	Test Freq. (MHz)	3.84
Test Configuration	2		

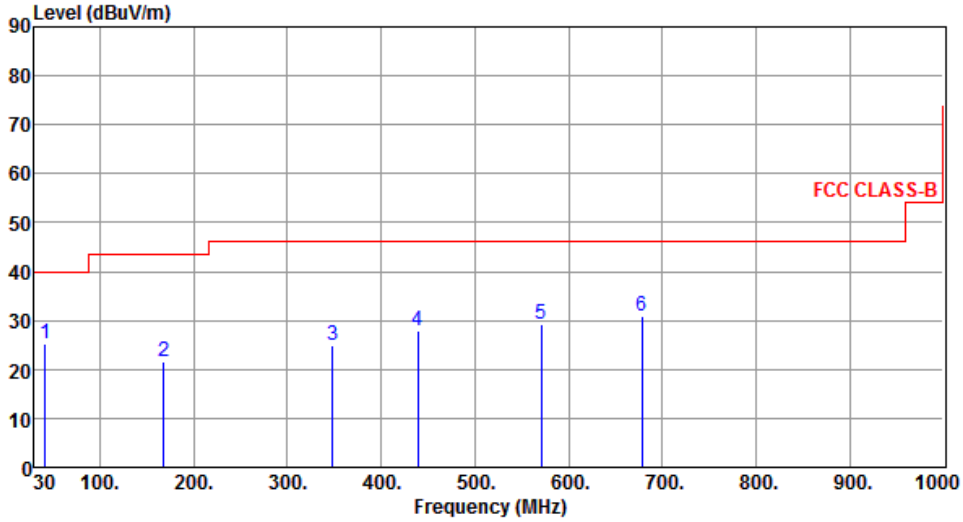

	Freq. MHz	Emission level dBuV/m	Limit dBuV/m	Margin dB	SA reading dBuV	Factor dB	Remark	ANT High cm	Turn Table deg
1	41.64	25.19	40.00	-14.81	33.53	-8.34	Peak	---	---
2	167.74	21.67	43.50	-21.83	30.10	-8.43	Peak	---	---
3	348.16	24.83	46.00	-21.17	31.25	-6.42	Peak	---	---
4	439.34	27.97	46.00	-18.03	31.94	-3.97	Peak	---	---
5	571.26	29.34	46.00	-16.66	30.59	-1.25	Peak	---	---
6	677.96	30.73	46.00	-15.27	29.95	0.78	Peak	---	---

Note 1: Emission Level (dBuV/m) = SA Reading (dBuV/m) + Factor* (dB)
*Factor includes antenna factor , cable loss and amplifier gain
Note 2: Margin (dB) = Emission level (dBuV/m) – Limit (dBuV/m)

Polarization	Horizontal	Test Freq. (MHz)	3.84
Test Configuration	3		

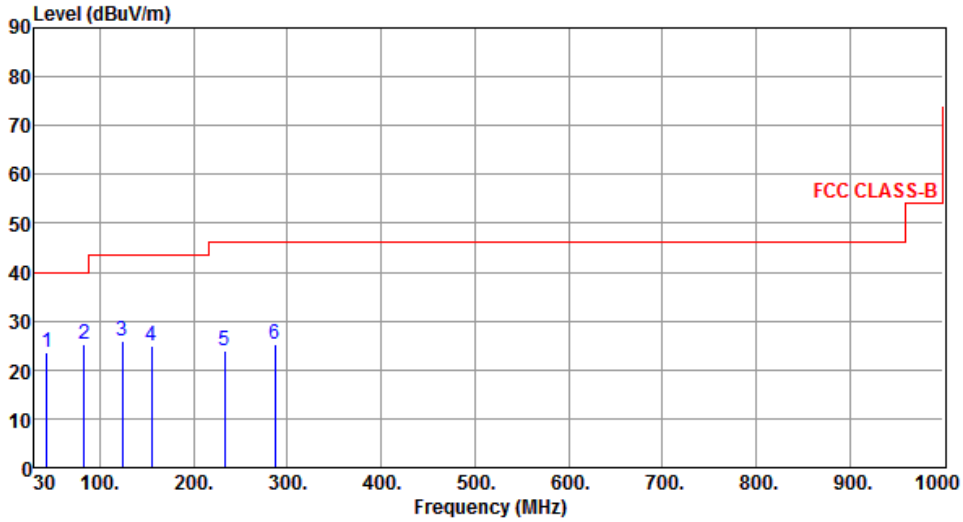

	Freq. MHz	Emission level dBuV/m	Limit dBuV/m	Margin dB	SA reading dBuV	Factor dB	Remark	ANT High cm	Turn Table deg
1	43.58	23.69	40.00	-16.31	31.90	-8.21	Peak	---	---
2	83.35	25.10	40.00	-14.90	38.49	-13.39	Peak	---	---
3	124.09	25.78	43.50	-17.72	36.22	-10.44	Peak	---	---
4	155.13	24.99	43.50	-18.51	33.31	-8.32	Peak	---	---
5	232.73	24.04	46.00	-21.96	34.08	-10.04	Peak	---	---
6	287.05	25.27	46.00	-20.73	33.25	-7.98	Peak	---	---

Note 1: Emission Level (dBuV/m) = SA Reading (dBuV/m) + Factor* (dB)
*Factor includes antenna factor , cable loss and amplifier gain
Note 2: Margin (dB) = Emission level (dBuV/m) – Limit (dBuV/m)

Polarization	Vertical	Test Freq. (MHz)	3.84
Test Configuration	3		

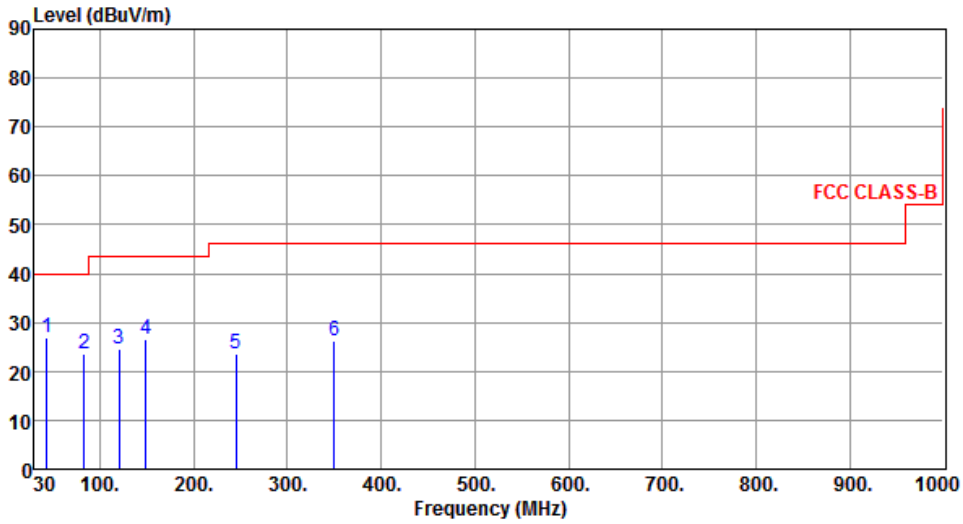

	Freq. MHz	Emission level dBuV/m	Limit dBuV/m	Margin dB	SA reading dBuV	Factor dB	Remark	ANT High cm	Turn Table deg
1	43.58	26.94	40.00	-13.06	35.15	-8.21	Peak	---	---
2	83.35	23.50	40.00	-16.50	36.89	-13.39	Peak	---	---
3	120.21	24.54	43.50	-18.96	35.42	-10.88	Peak	---	---
4	149.31	26.64	43.50	-16.86	35.00	-8.36	Peak	---	---
5	245.34	23.43	46.00	-22.57	32.80	-9.37	Peak	---	---
6	350.10	26.19	46.00	-19.81	32.52	-6.33	Peak	---	---

Note 1: Emission Level (dBuV/m) = SA Reading (dBuV/m) + Factor* (dB)
*Factor includes antenna factor , cable loss and amplifier gain
Note 2: Margin (dB) = Emission level (dBuV/m) – Limit (dBuV/m)

Polarization	Horizontal	Test Freq. (MHz)	3.84
Test Configuration	4		

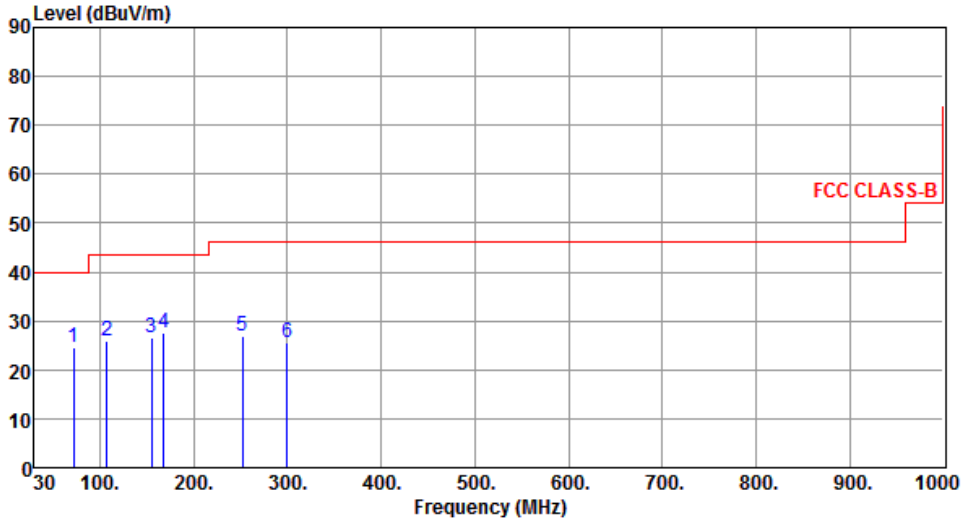

	Freq. MHz	Emission level dBuV/m	Limit dBuV/m	Margin dB	SA reading dBuV	Factor dB	Remark	ANT High cm	Turn Table deg
1	71.71	24.72	40.00	-15.28	35.64	-10.92	Peak	---	---
2	107.60	25.99	43.50	-17.51	38.26	-12.27	Peak	---	---
3	155.13	26.44	43.50	-17.06	34.76	-8.32	Peak	---	---
4	167.74	27.52	43.50	-15.98	36.02	-8.50	Peak	---	---
5	252.13	26.98	46.00	-19.02	36.20	-9.22	Peak	---	---
6	299.66	25.50	46.00	-20.50	33.18	-7.68	Peak	---	---

Note 1: Emission Level (dBuV/m) = SA Reading (dBuV/m) + Factor* (dB)
*Factor includes antenna factor , cable loss and amplifier gain
Note 2: Margin (dB) = Emission level (dBuV/m) – Limit (dBuV/m)

Polarization	Vertical	Test Freq. (MHz)	3.84
Test Configuration	4		

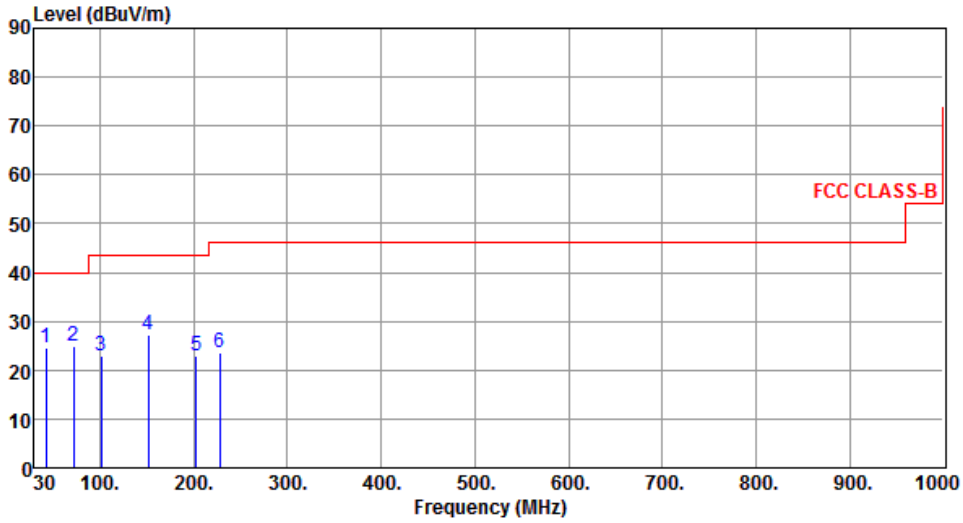

	Freq. MHz	Emission level dBuV/m	Limit dBuV/m	Margin dB	SA reading dBuV	Factor dB	Remark	ANT High cm	Turn Table deg
1	42.61	24.61	40.00	-15.39	32.89	-8.28	Peak	---	---
2	71.71	24.78	40.00	-15.22	35.70	-10.92	Peak	---	---
3	101.78	23.02	43.50	-20.48	36.30	-13.28	Peak	---	---
4	151.25	27.29	43.50	-16.21	35.61	-8.32	Peak	---	---
5	202.66	22.95	43.50	-20.55	33.98	-11.03	Peak	---	---
6	227.88	23.64	46.00	-22.36	34.04	-10.40	Peak	---	---

Note 1: Emission Level (dBuV/m) = SA Reading (dBuV/m) + Factor* (dB)
*Factor includes antenna factor , cable loss and amplifier gain
Note 2: Margin (dB) = Emission level (dBuV/m) – Limit (dBuV/m)

4 Test laboratory information

Established in 2012, ICC provides foremost EMC & RF Testing and advisory consultation services by our skilled engineers and technicians. Our services employ a wide variety of advanced edge test equipment and one of the widest certification extents in the business.

International Certification Corp (EMC and Wireless Communication Laboratory), it is our definitive objective is to institute long term, trust-based associations with our clients. The expectation we set up with our clients is based on outstanding service, practical expertise and devotion to a certified value structure. Our passion is to grant our clients with best EMC / RF services by oriented knowledgeable and accommodating staff.

Our Test sites are located at Linkou District and Kwei Shan District. Location map can be found on our website http://www.icertifi.com.tw.

Linkou	**Kwei Shan**	**Kwei Shan Site II**
Tel: 886-2-2601-1640	Tel: 886-3-271-8666	Tel: 886-3-271-8640
No. 30-2, Ding Fwu Tsuen, Lin Kou District, New Taipei City, Taiwan, R.O.C.	No. 3-1, Lane 6, Wen San 3rd St., Kwei Shan District, Tao Yuan City 333, Taiwan, R.O.C.	No. 14-1, Lane 19, Wen San 3rd St., Kwei Shan District, Tao Yuan City 333, Taiwan, R.O.C.

If you have any suggestion, please feel free to contact us as below information.

Tel: 886-3-271-8666
Fax: 886-3-318-0155
Email: ICC_Service@icertifi.com.tw

══END══