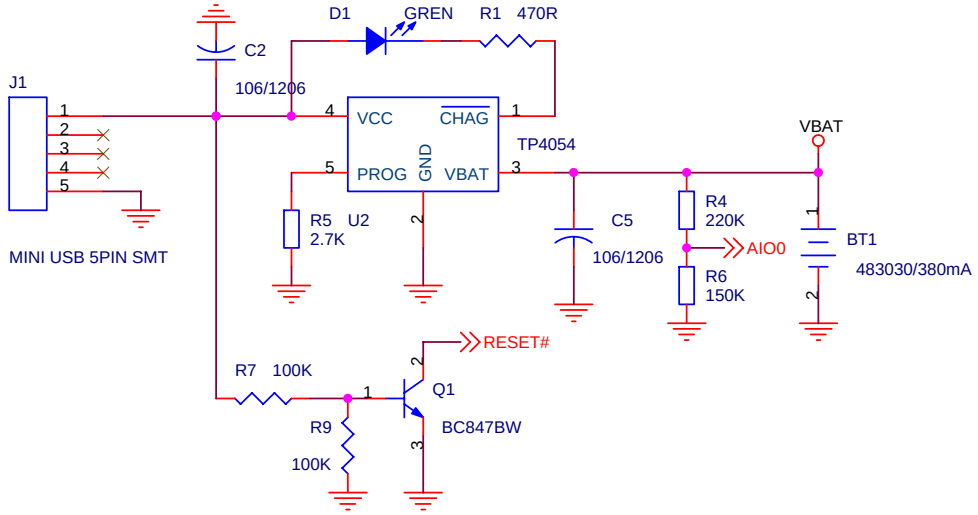

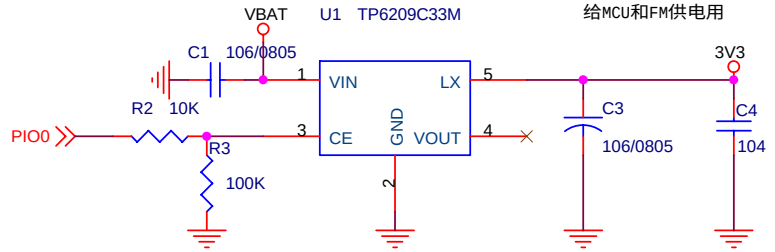

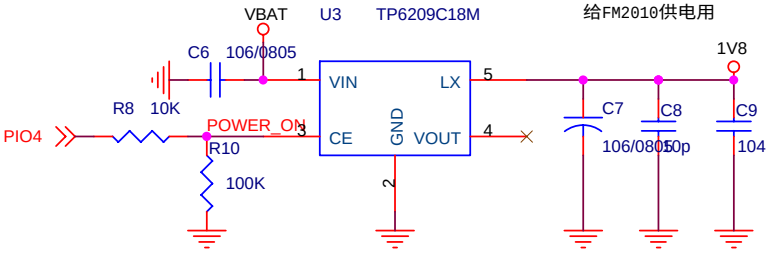

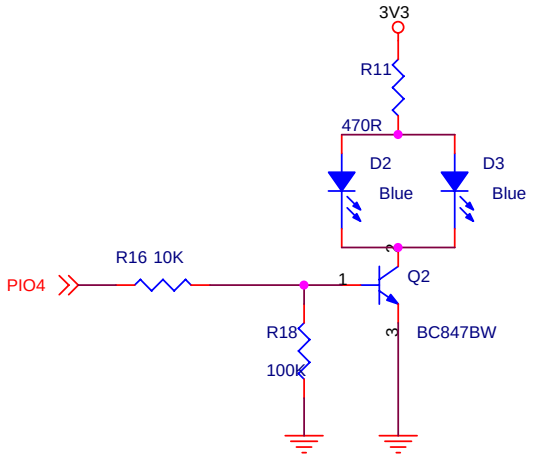

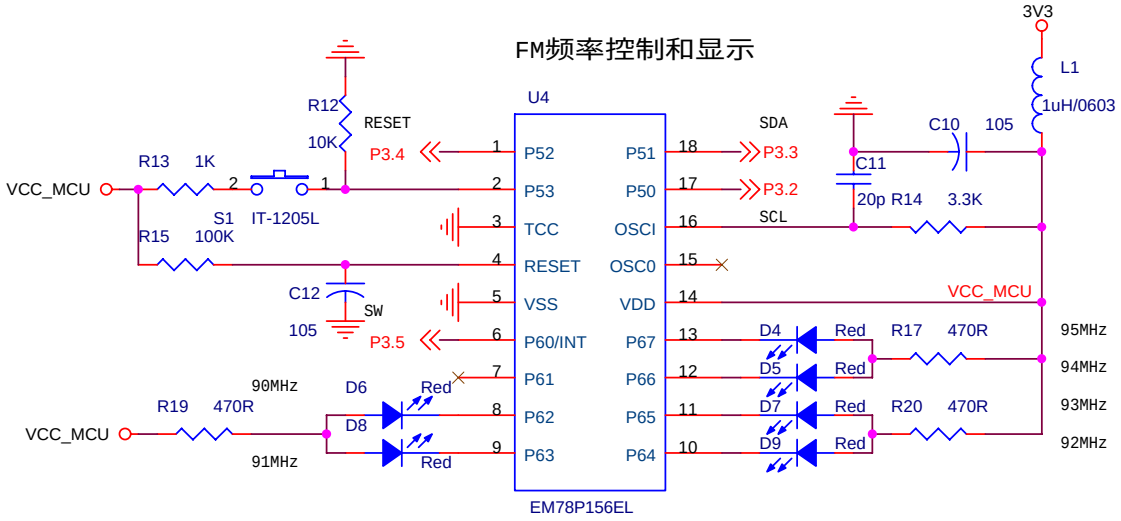

BCK03_V1.0_SCH		
Title: 1) POWER AND MCU		
Size: A4	Document Number: <Doc>	Rev: V1.0
Date: Friday, March 28, 2008	Sheet 1 of 5	

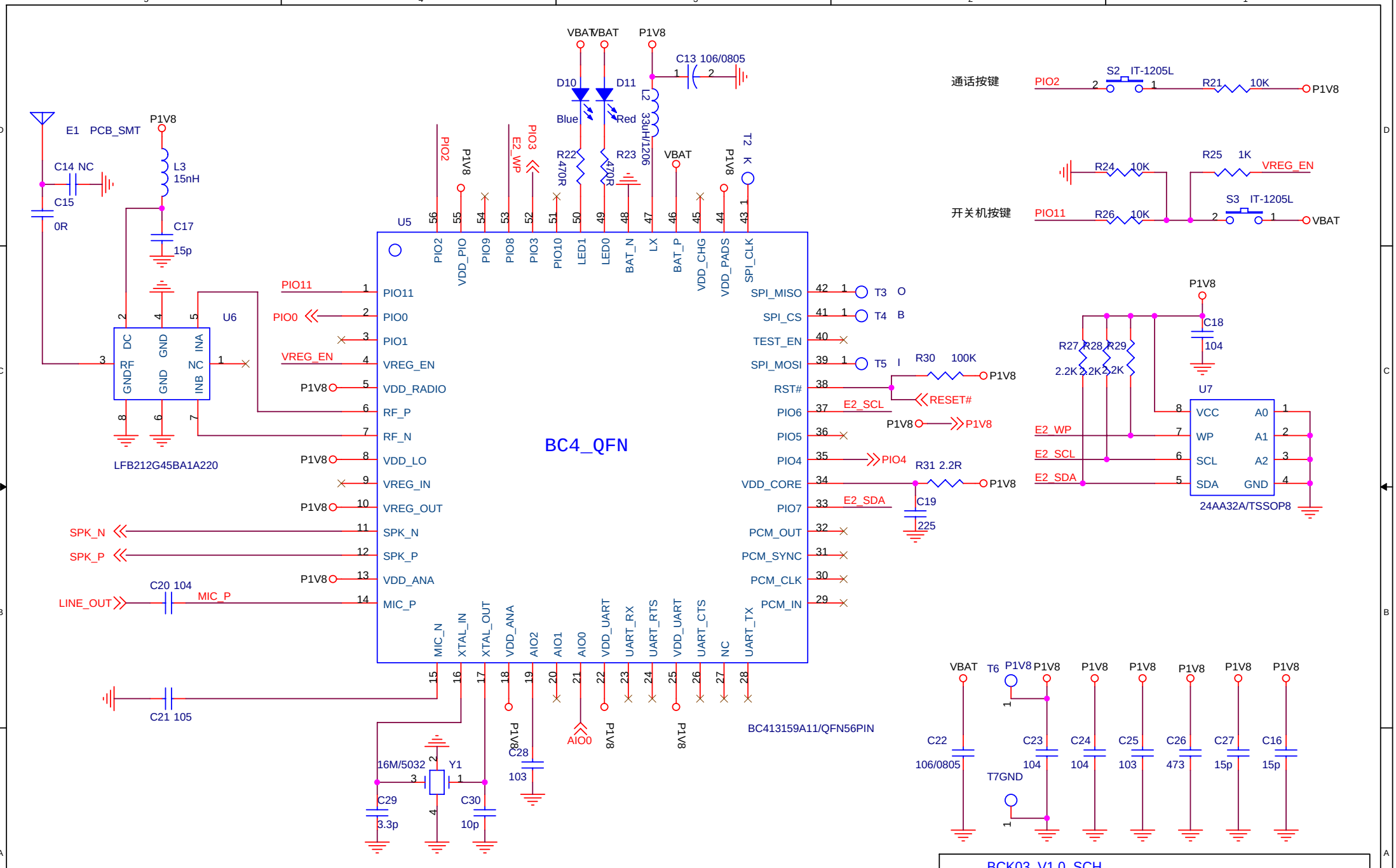

BCK03_V1.0_SCH		
Title	2) CSR_BC4_ROM	
Size A4	Document Number <Doc>	Rev V1.0
Date: Tuesday, April 01, 2008	Sheet 2 of 5	

CARKIT板上的FM电路部分

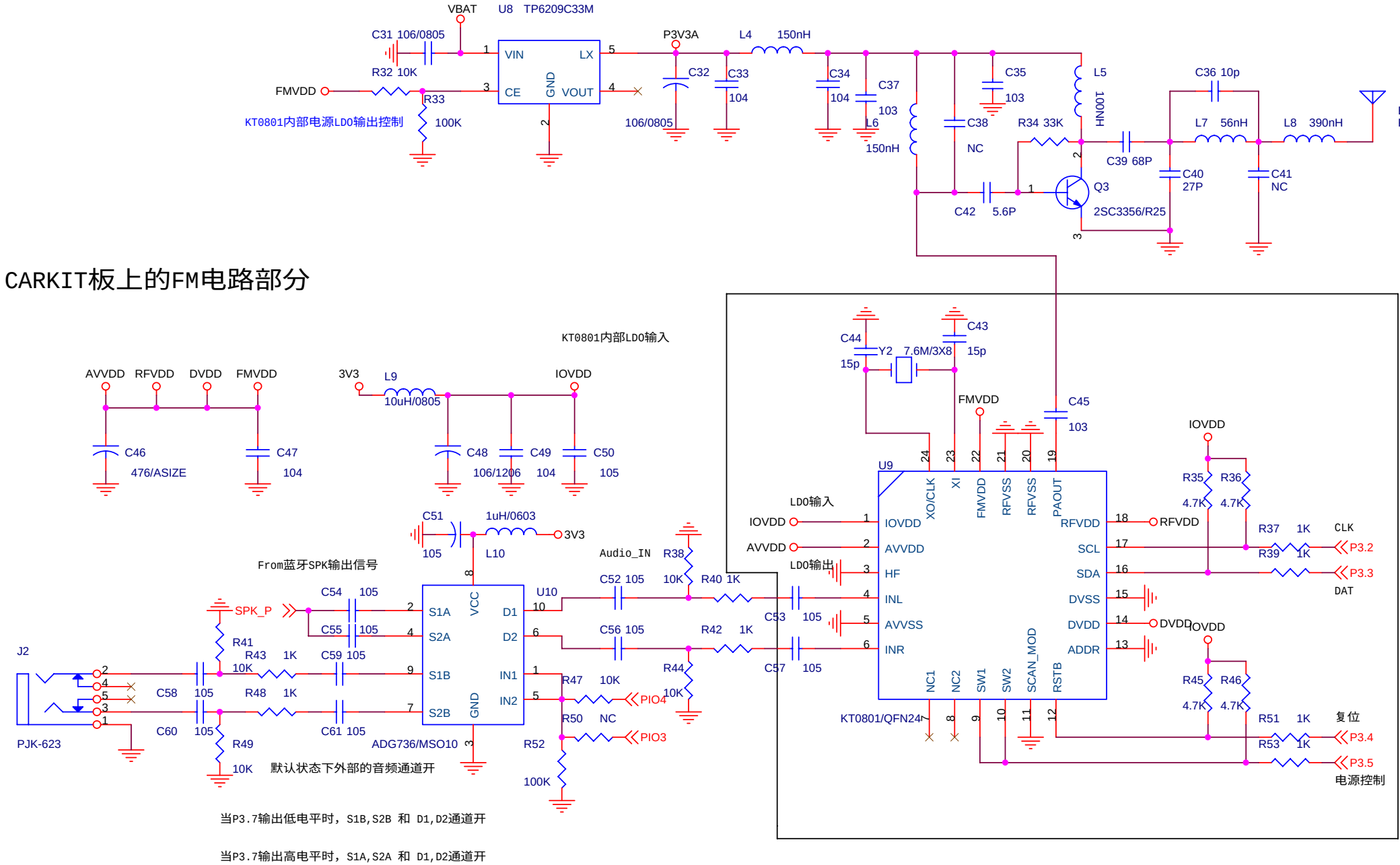

BCK03_V1.0_SCH		
Title: 3) KT0801 FM		
Size: A4	Document Number: <Doc>	Rev: V1.0
Date: Tuesday, April 01, 2008	Sheet 3 of 5	

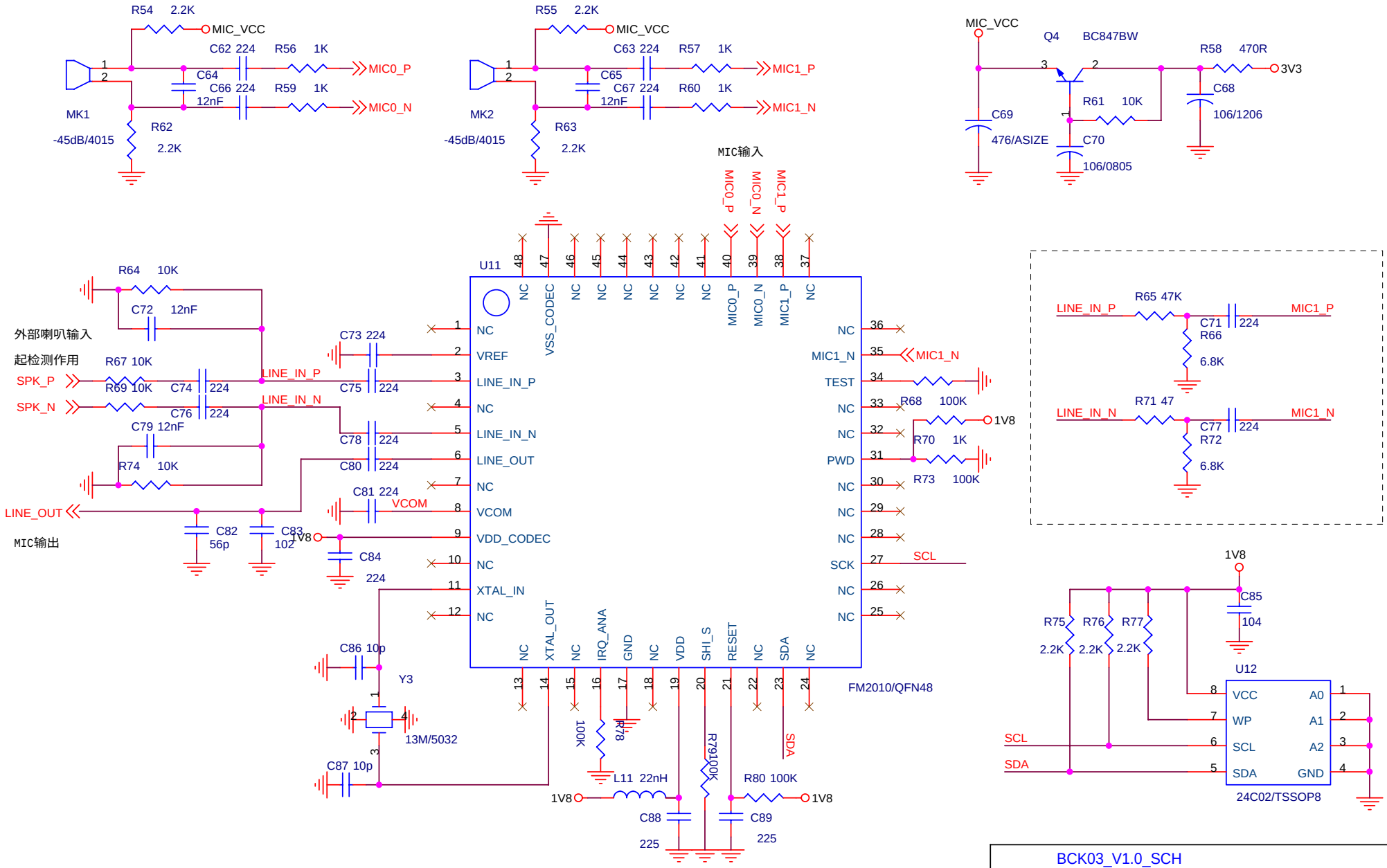

BCK03_V1.0_SCH		
Title: 4) Fortemedia FM2010		
Size: A4	Document Number: <Doc>	Rev: V1.0
Date: Tuesday, April 01, 2008	Sheet 4 of 5	