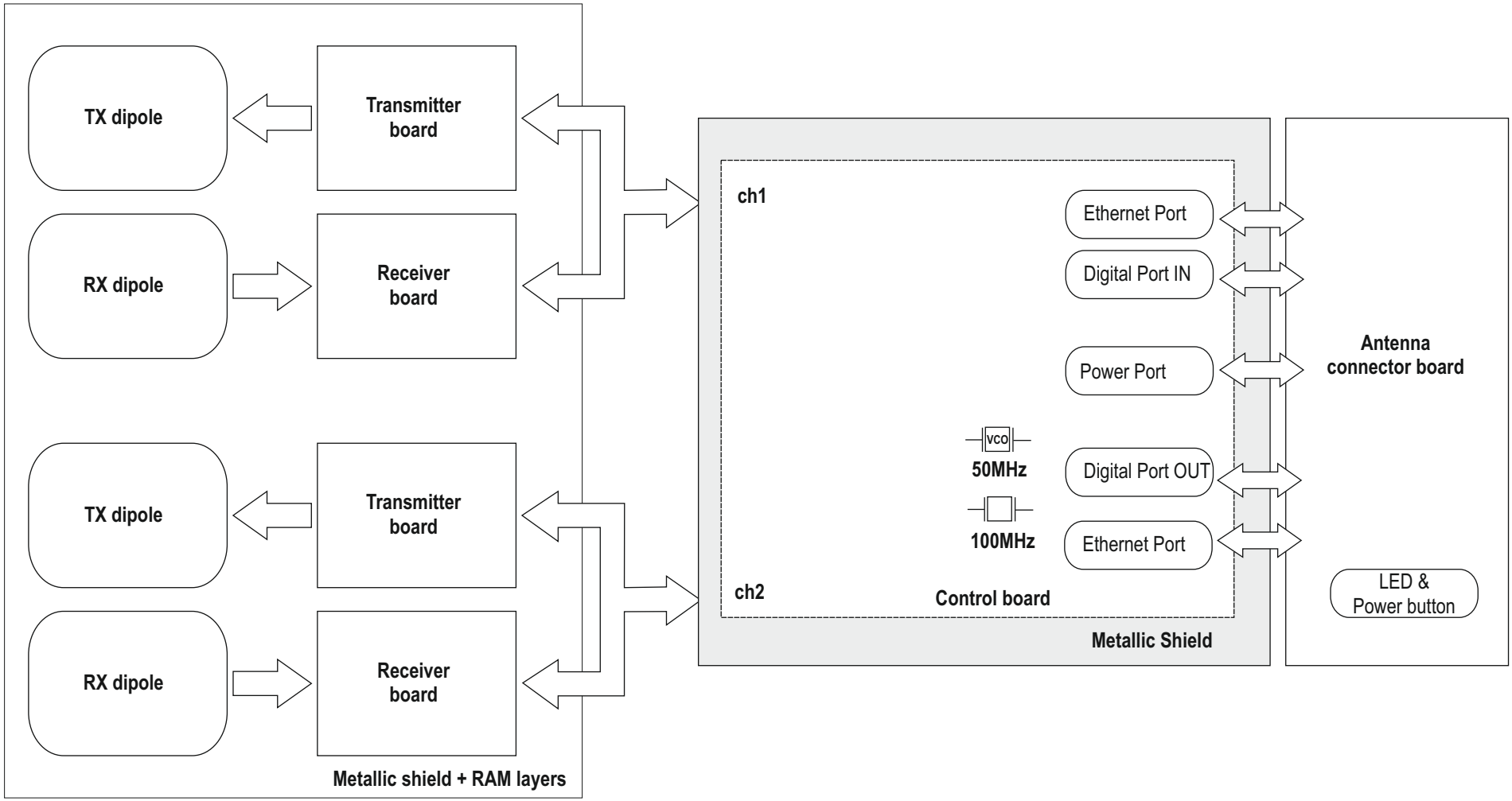
TX dipole
Transmitter board
RX dipole
Receiver board
TX dipole
Transmitter board
RX dipole
Receiver board
Metallic shield + RAM layers
ch1
Ethernet Port
Digital Port IN
Power Port
VCO
50MHz
Digital Port OUT
100MHz
Ethernet Port
ch2
Control board
Metallic Shield
Antenna connector board
LED & Power button