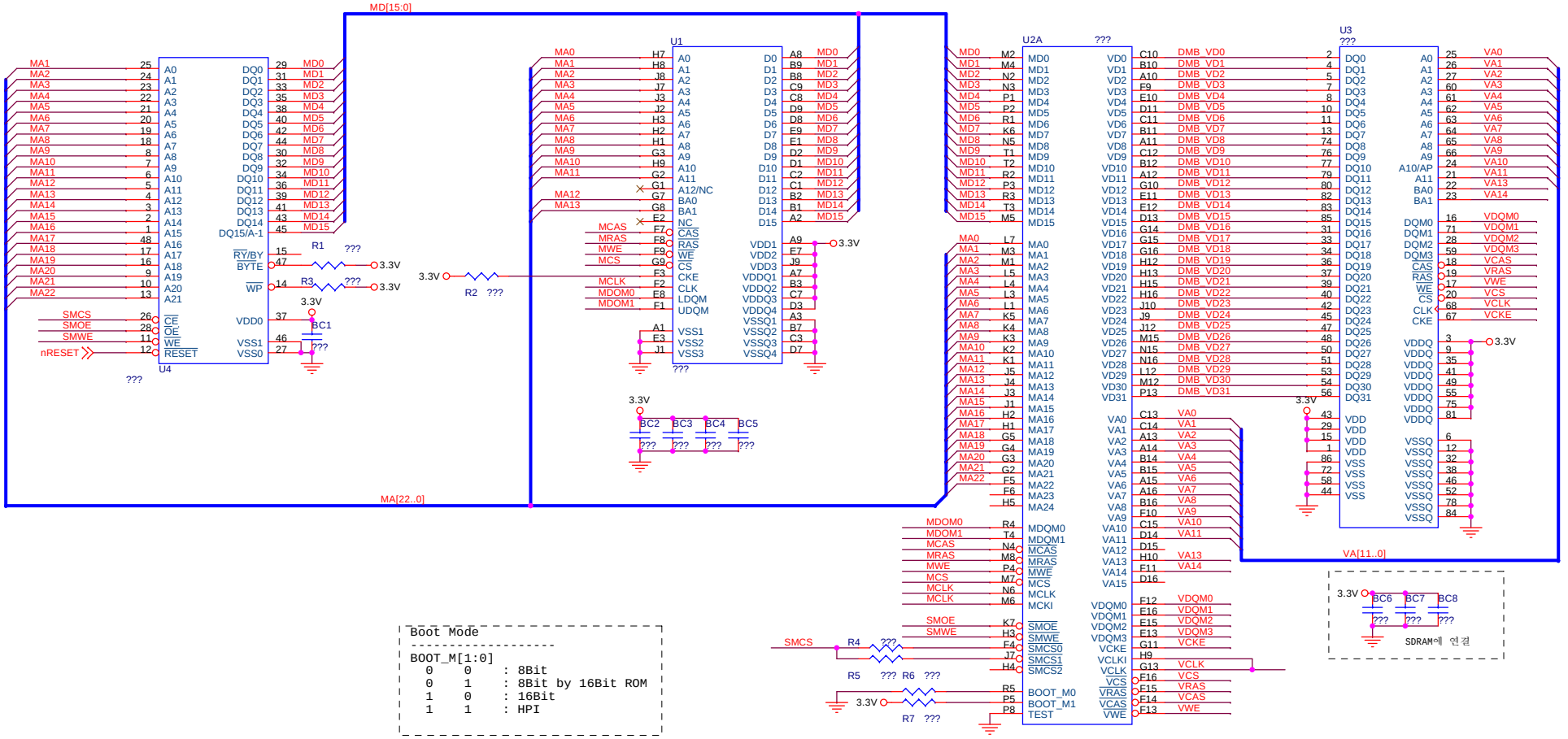


```
Boot Mode
-------------------
BOOT_M[1:0]
  0    0    : 8Bit
  0    1    : 8Bit by 16Bit ROM
  1    0    : 16Bit
  1    1    : HPI
```

Title	dbtek		
Size A3	Document Number ver 2.1		Rev <RevCode>
Date: Thursday, October 19, 2006		Sheet 1 of 14	

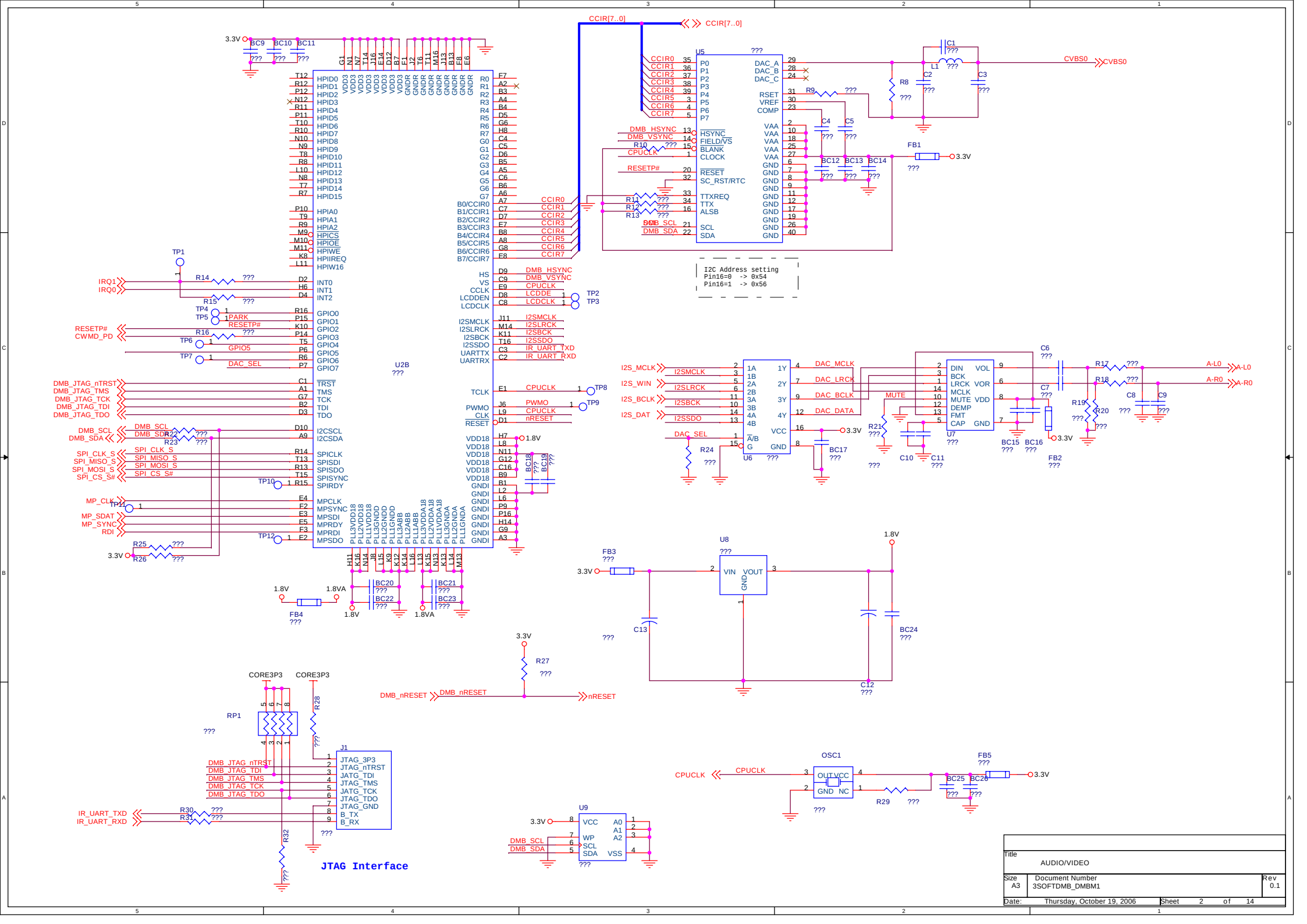
U2B
???
HPID0
HPID1
HPID2
HPID3
HPID4
HPID5
HPID6
HPID7
HPID8
HPID9
HPID10
HPID11
HPID12
HPID13
HPID14
HPID15
HPIA0
HPIA1
HPIA2
HPICS
HPIOE
HPIWE
HPIIREQ
HPIW16
INT0
INT1
INT2
GPIO0
GPIO1
GPIO2
GPIO3
GPIO4
GPIO5
GPIO6
GPIO7
TRST
TMS
TCK
TDI
TDO
I2CSCL
I2CSDA
SPICLK
SPISDI
SPISDO
SPISYNC
SPIRDY
MPCLK
MPSYNC
MPSDI
MPRDY
MPRDI
MPSDO
HS
VS
CCLK
LCDDEN
LCDCLK
I2SMCLK
I2SLRCK
I2SBCK
I2SSDO
UARTTX
UARTRX
TCLK
PWMO
CLK
RESET
CCIR[7..0]
DMB_HSYNC
DMB_VSYNC
CPUCLK
LCDDE
LCDCLK
I2SMCLK
I2SLRCK
I2SBCK
I2SSDO
IR_UART_TXD
IR_UART_RXD
CPUCLK
PWMO
CPUCLK
nRESET
U5
CCIR0
CCIR1
CCIR2
CCIR3
CCIR4
CCIR5
CCIR6
CCIR7
DMB_HSYNC
DMB_VSYNC
CPUCLK
RESETP#
DMB_SCL
DMB_SDA
P0
P1
P2
P3
P4
P5
P6
P7
HSYNC
FIELD/VS
BLANK
CLOCK
RESET
SC_RST/RTC
TTXREQ
TTX
ALSB
SCL
SDA
DAC_A
DAC_B
DAC_C
RSET
VREF
COMP
VAA
GND
I2C Address setting
Pin16=0 -> 0x54
Pin16=1 -> 0x56
CVBS0
FB1
3.3V
U6
I2S_MCLK
I2S_WIN
I2S_BCLK
I2S_DAT
DAC_SEL
I2SMCLK
I2SLRCK
I2SBCK
I2SSDO
DAC_MCLK
DAC_LRCK
DAC_BCLK
DAC_DATA
U7
DIN
BCK
LRCK
MCLK
MUTE
DEMP
FMT
CAP
VOL
VOR
VDD
GND
MUTE
A-L0
A-R0
U8
VIN
VOUT
GND
FB3
FB4
1.8V
1.8VA
U9
VCC
WP
SCL
SDA
A0
A1
A2
VSS
OSC1
OUT
VCC
GND
NC
FB5
FB2
RP1
CORE3P3
J1
JTAG_3P3
JTAG_nTRST
JATG_TDI
JTAG_TMS
JATG_TCK
JTAG_TDO
JTAG_GND
B_TX
B_RX
JTAG Interface
DMB_nRESET
nRESET
Title
AUDIO/VIDEO
Size
A3
Document Number
3SOFTDMB_DMBM1
Rev
0.1
Date:
Thursday, October 19, 2006
Sheet
2
of
14

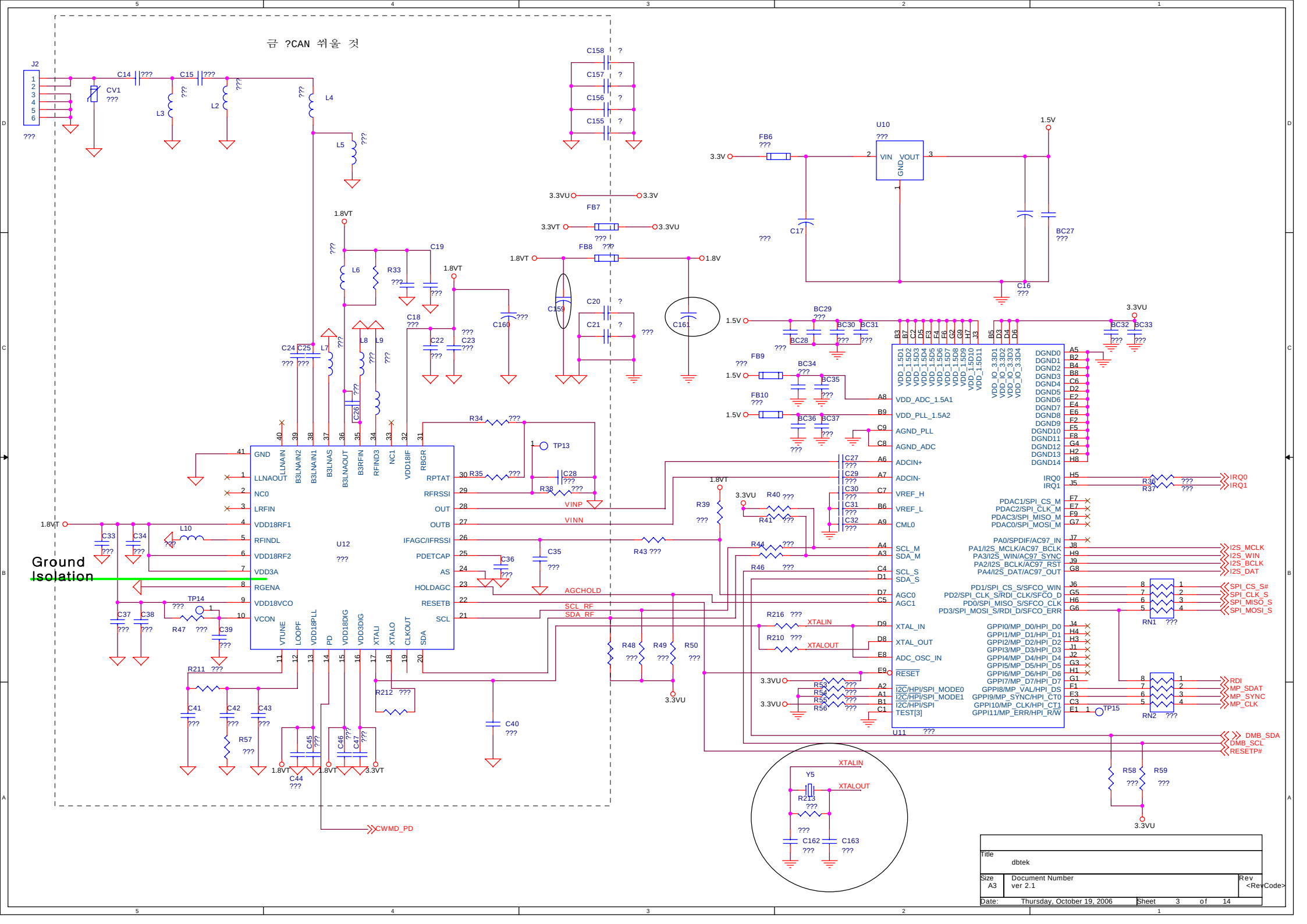

금 ?CAN 쒸울 것
Ground Isolation
U12
U11
U10
J2
CV1
L2
L3
L4
L5
L6
L7
L8
L9
L10
C14
C15
C16
C17
C18
C19
C20
C21
C22
C23
C24
C25
C26
C28
C33
C34
C35
C36
C37
C38
C39
C40
C41
C42
C43
C44
C45
C46
C47
C155
C156
C157
C158
C159
C160
C161
C162
C163
R33
R34
R35
R38
R39
R40
R41
R43
R44
R46
R47
R48
R49
R50
R57
R58
R59
R211
R212
R213
R216
R210
R36
R37
R53
R54
R55
R56
R58
R59
FB6
FB7
FB8
FB9
FB10
BC27
BC28
BC29
BC30
BC31
BC32
BC33
BC34
BC35
BC36
BC37
TP13
TP14
TP15
RN1
RN2
Y5
VIN
VOUT
GND
1.5V
3.3V
3.3VU
3.3VT
1.8VT
1.8V
VINP
VINN
AGCHOLD
SCL_RF
SDA_RF
XTALIN
XTALOUT
CWMD_PD
IRQ0
IRQ1
I2S_MCLK
I2S_WIN
I2S_BCLK
I2S_DAT
SPI_CS_S#
SPI_CLK_S
SPI_MISO_S
SPI_MOSI_S
RDI
MP_SDAT
MP_SYNC
MP_CLK
DMB_SDA
DMB_SCL
RESETP#
GND
LLNAOUT
NC0
LRFIN
VDD18RF1
RFINDL
VDD18RF2
VDD3A
RGENA
VDD18VCO
VCON
LLNAIN
B3LNAIN2
B3LNAIN1
B3LNAS
B3LNAOUT
B3RFIN
RFIND3
NC1
VDD18IF
RBGR
RPTAT
RFRSSI
OUT
OUTB
IFAGC/IFRSSI
PDETCAP
AS
HOLDAGC
RESETB
SCL
VTUNE
LOOPF
VDD18PLL
PD
VDD18DIG
VDD3DIG
XTALI
XTALO
CLKOUT
SDA
VDD_ADC_1.5A1
VDD_PLL_1.5A2
AGND_PLL
AGND_ADC
ADCIN+
ADCIN-
VREF_H
VREF_L
CML0
SCL_M
SDA_M
SCL_S
SDA_S
AGC0
AGC1
XTAL_IN
XTAL_OUT
ADC_OSC_IN
RESET
I2C/HPI/SPI_MODE0
I2C/HPI/SPI_MODE1
I2C/HPI/SPI
TEST[3]
DGND0
DGND1
DGND2
DGND3
DGND4
DGND5
DGND6
DGND7
DGND8
DGND9
DGND10
DGND11
DGND12
DGND13
DGND14
IRQ0
IRQ1
PDAC1/SPI_CS_M
PDAC2/SPI_CLK_M
PDAC3/SPI_MISO_M
PDAC0/SPI_MOSI_M
PA0/SPDIF/AC97_IN
PA1/I2S_MCLK/AC97_BCLK
PA3/I2S_WIN/AC97_SYNC
PA2/I2S_BCLK/AC97_RST
PA4/I2S_DAT/AC97_OUT
PD1/SPI_CS_S/SFCO_WIN
PD2/SPI_CLK_S/RDI_CLK/SFCO_D
PD0/SPI_MISO_S/SFCO_CLK
PD3/SPI_MOSI_S/RDI_D/SFCO_ERR
GPPI0/MP_D0/HPI_D0
GPPI1/MP_D1/HPI_D1
GPPI2/MP_D2/HPI_D2
GPPI3/MP_D3/HPI_D3
GPPI4/MP_D4/HPI_D4
GPPI5/MP_D5/HPI_D5
GPPI6/MP_D6/HPI_D6
GPPI7/MP_D7/HPI_D7
GPPI8/MP_VAL/HPI_DS
GPPI9/MP_SYNC/HPI_CT0
GPPI10/MP_CLK/HPI_CT1
GPPI11/MP_ERR/HPI_R/W
Title
dbtek
Size
A3
Document Number
ver 2.1
Rev
<RevCode>
Date: Thursday, October 19, 2006
Sheet 3 of 14

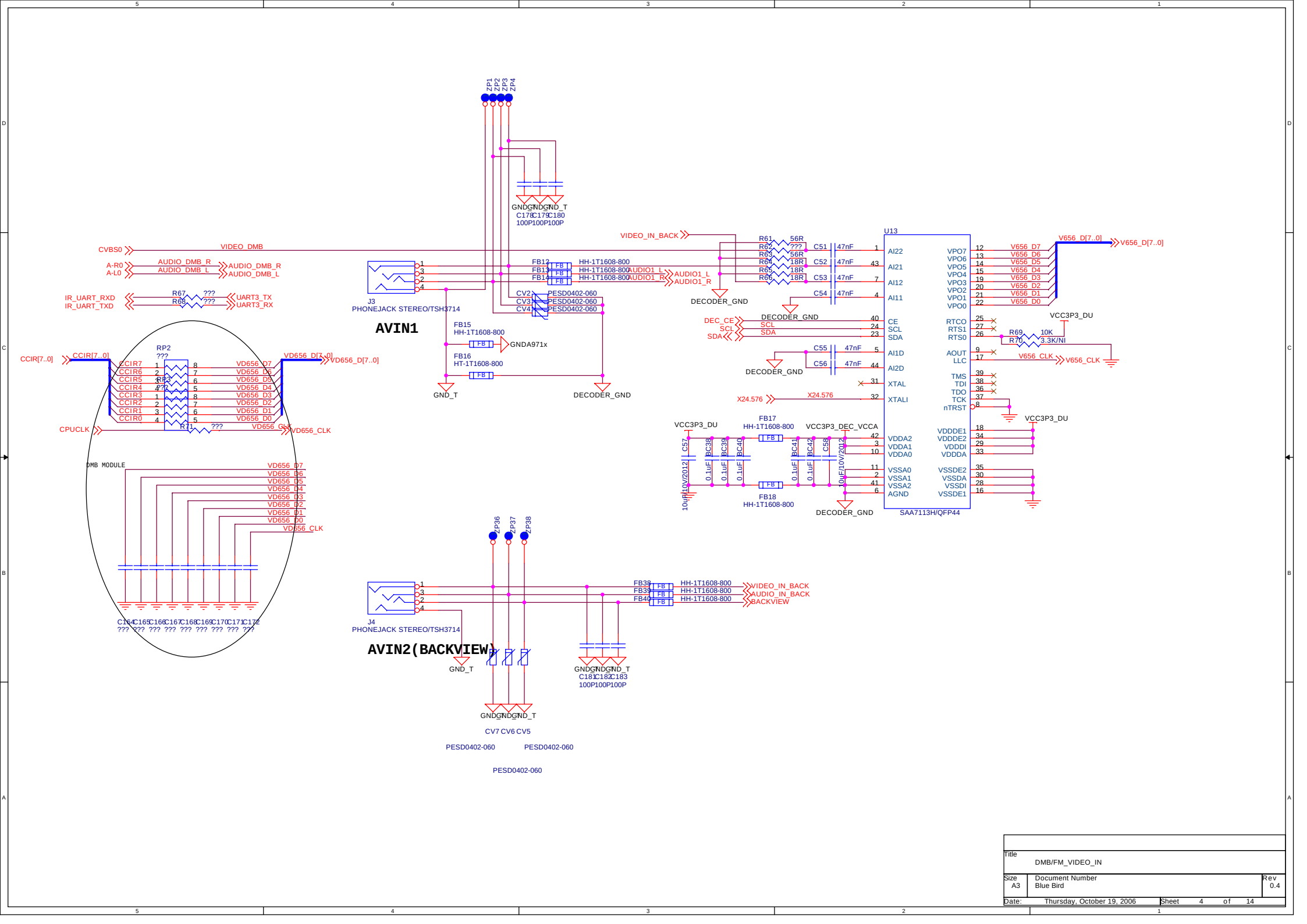

Title	DMB/FM_VIDEO_IN	
Size A3	Document Number Blue Bird	Rev 0.4
Date: Thursday, October 19, 2006	Sheet 4 of 14	

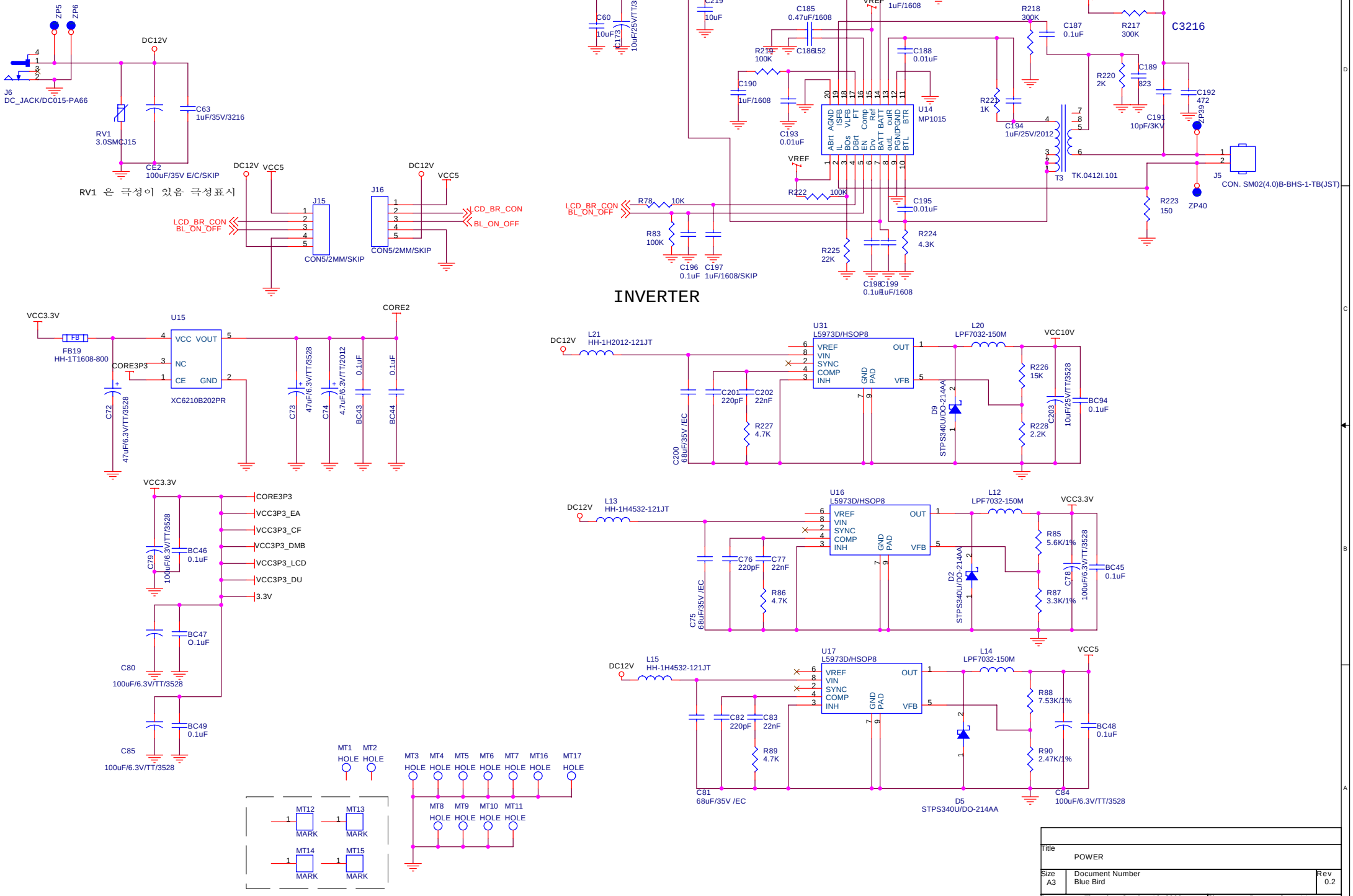

Title	POWER	
Size A3	Document Number Blue Bird	Rev 0.2
Date: Thursday, October 19, 2006	Sheet 5 of 14	

7" LCD Connector

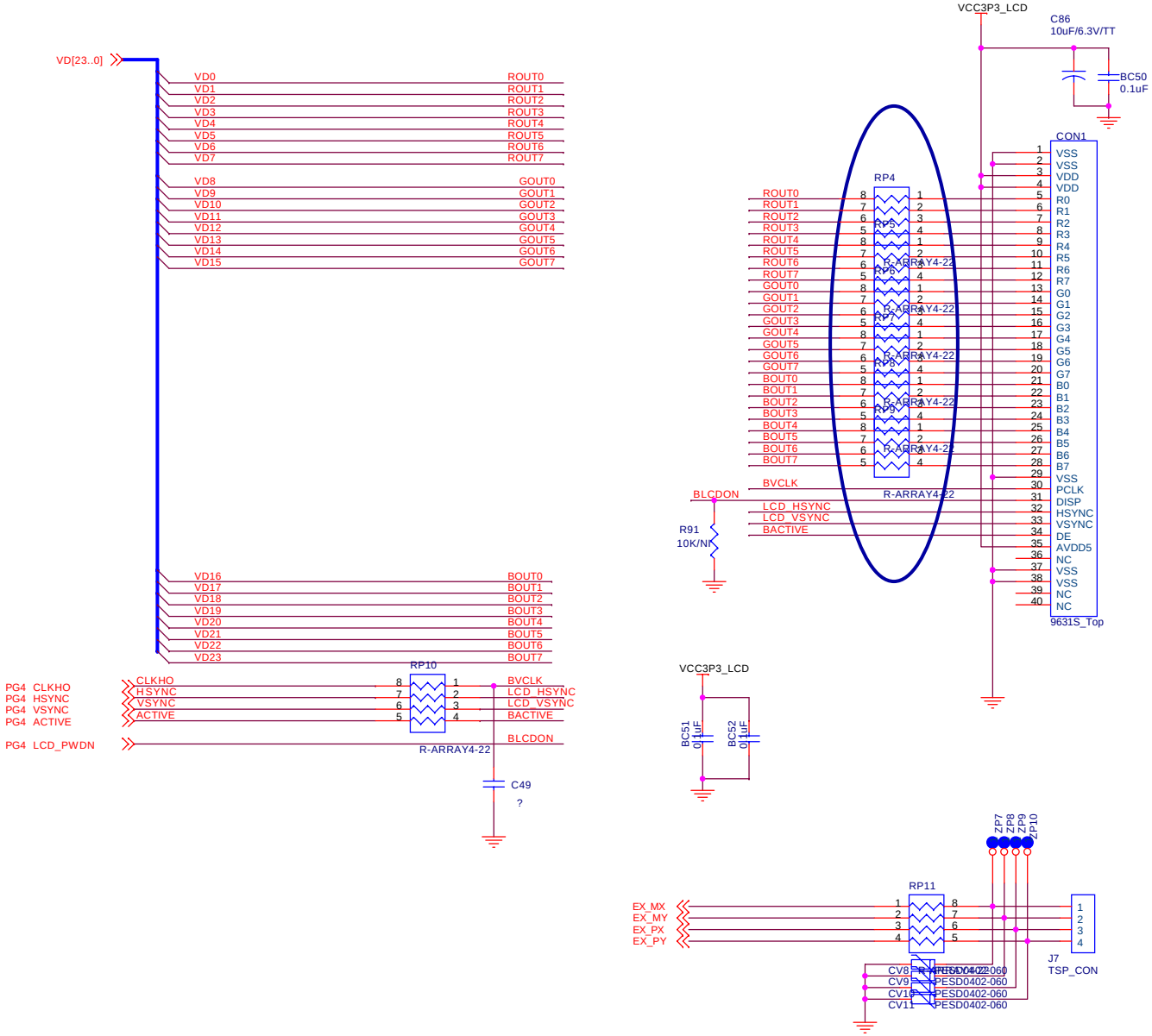

4 Pin FPC Connector for LED Backlight

Title	LCD		
Size A3	Document Number Blue Bird		Rev 0.2
Date: Thursday, October 19, 2006		Sheet 6 of 14	

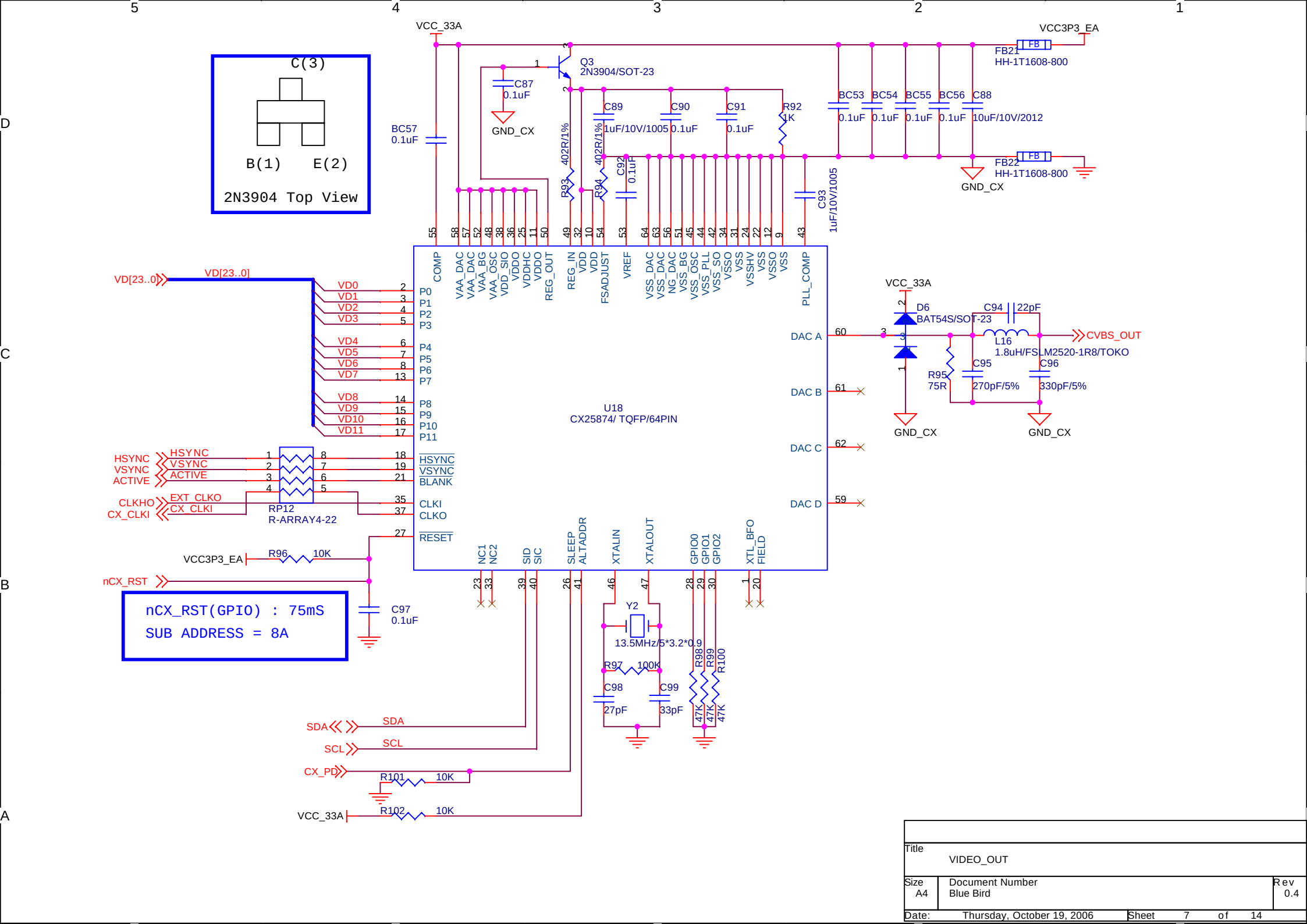

Title	VIDEO_OUT	
Size A4	Document Number Blue Bird	Rev 0.4
Date: Thursday, October 19, 2006	Sheet 7 of 14	

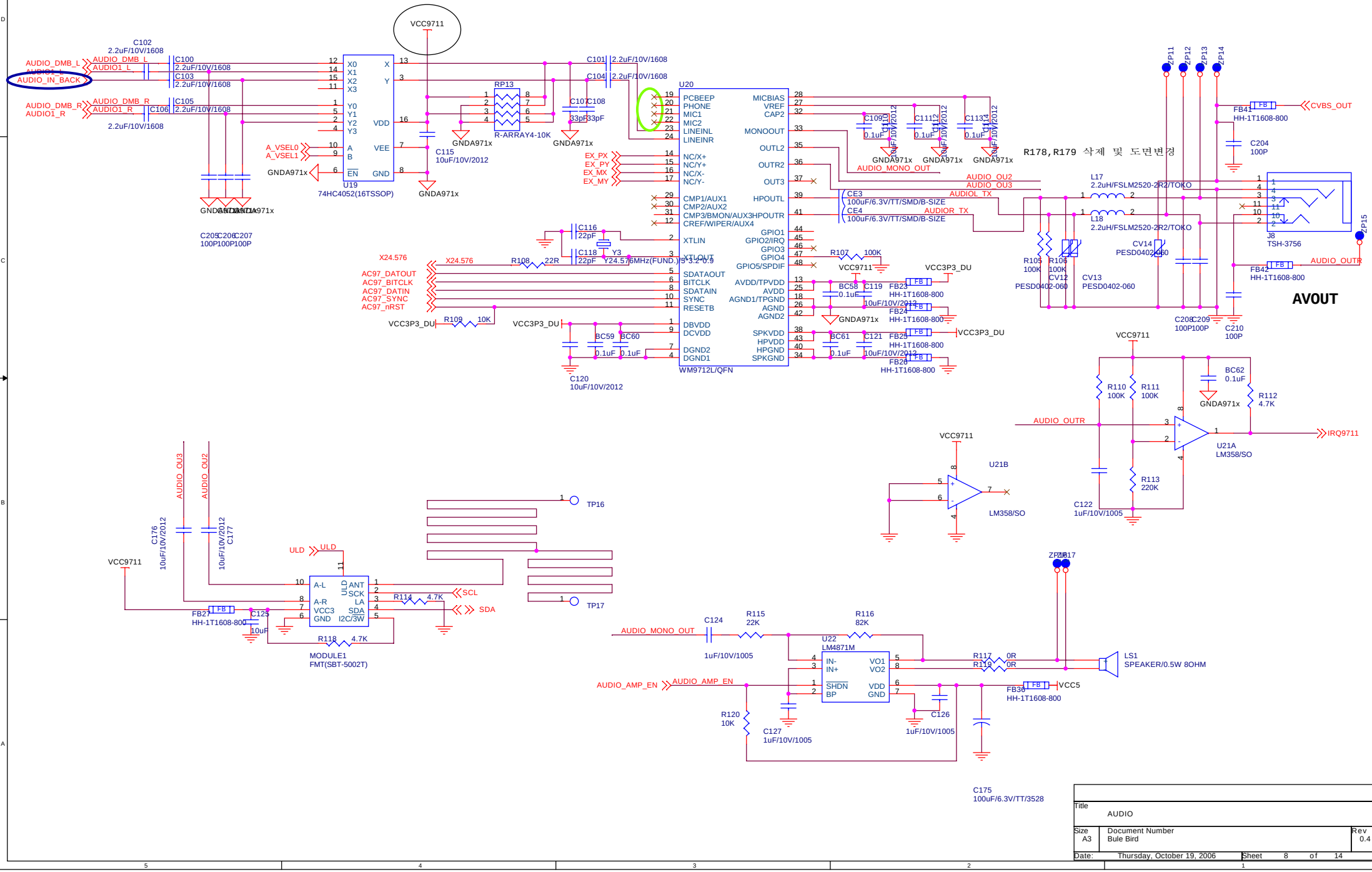

Title	AUDIO	
Size A3	Document Number Bule Bird	Rev 0.4
Date: Thursday, October 19, 2006	Sheet 8 of 14	

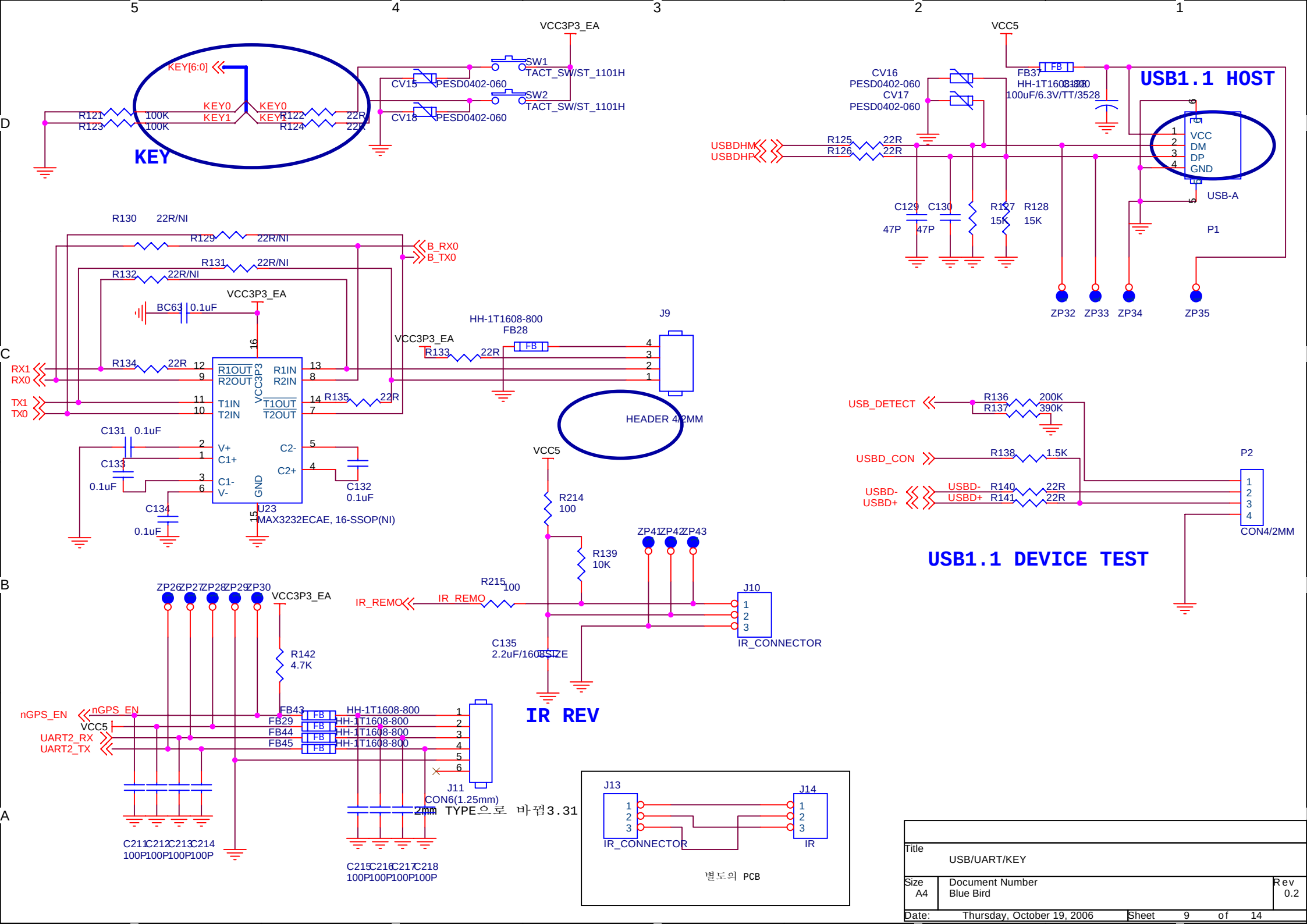
KEY
KEY[6:0]
R121 100K
R123 100K
KEY0
KEY1
KEY0
KEY1
R122 22R
R124 22R
CV15 PESD0402-060
CV18 PESD0402-060
VCC3P3_EA
SW1 TACT_SW/ST_1101H
SW2 TACT_SW/ST_1101H
USB1.1 HOST
VCC5
CV16 PESD0402-060
CV17 PESD0402-060
FB37 HH-1T1608-800
100uF/6.3V/TT/3528
USBDHM
USBDHP
R125 22R
R126 22R
VCC
DM
DP
GND
USB-A
P1
C129 47P
C130 47P
R127 15K
R128 15K
ZP32
ZP33
ZP34
ZP35
R130 22R/NI
R129 22R/NI
R131 22R/NI
R132 22R/NI
B_RX0
B_TX0
BC63 0.1uF
VCC3P3_EA
HH-1T1608-800
FB28
J9
R133 22R
HEADER 4/2MM
RX1
RX0
TX1
TX0
R134 22R
R135 22R
R1OUT
R2OUT
R1IN
R2IN
T1IN
T2IN
T1OUT
T2OUT
V+
C1+
C1-
V-
C2-
C2+
GND
VCC3P3
C131 0.1uF
C133 0.1uF
C134 0.1uF
C132 0.1uF
U23
MAX3232ECAE, 16-SSOP(NI)
USB_DETECT
R136 200K
R137 390K
USBD_CON
R138 1.5K
P2
USBD-
USBD+
R140 22R
R141 22R
CON4/2MM
USB1.1 DEVICE TEST
VCC5
R214 100
ZP41
ZP42
ZP43
R139 10K
R215 100
IR_REMO
J10
IR_CONNECTOR
C135 2.2uF/1608SIZE
IR REV
ZP26
ZP27
ZP28
ZP29
ZP30
VCC3P3_EA
R142 4.7K
nGPS_EN
VCC5
UART2_RX
UART2_TX
FB43
FB29
FB44
FB45
HH-1T1608-800
J11
CON6(1.25mm)
2mm TYPE으로 바뀜3.31
C211 100P
C212 100P
C213 100P
C214 100P
C215 100P
C216 100P
C217 100P
C218 100P
J13
IR_CONNECTOR
J14
IR
별도의 PCB
Title
USB/UART/KEY
Size
A4
Document Number
Blue Bird
Rev
0.2
Date:
Thursday, October 19, 2006
Sheet
9
of
14

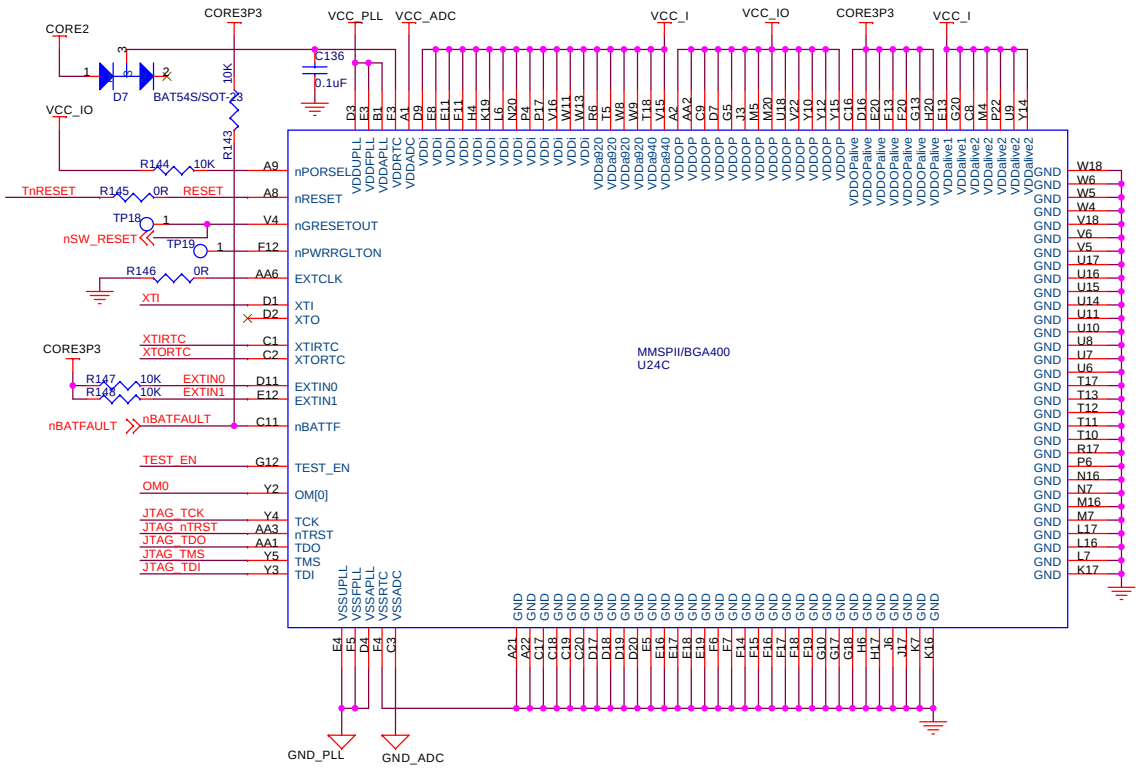

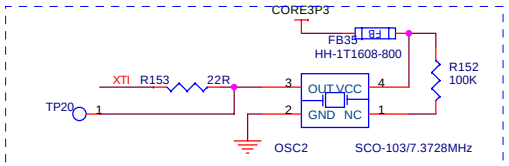

- Minimize the signal length of XTI as short as possible
- Do not make a VIA hole

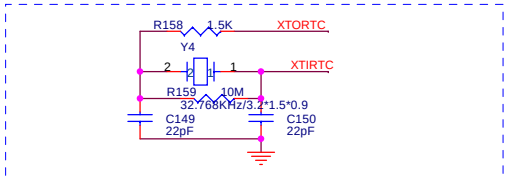

- Minimize the signal length of XTORTC & XTIRTC as short as possible
- Do not make a VIA hole

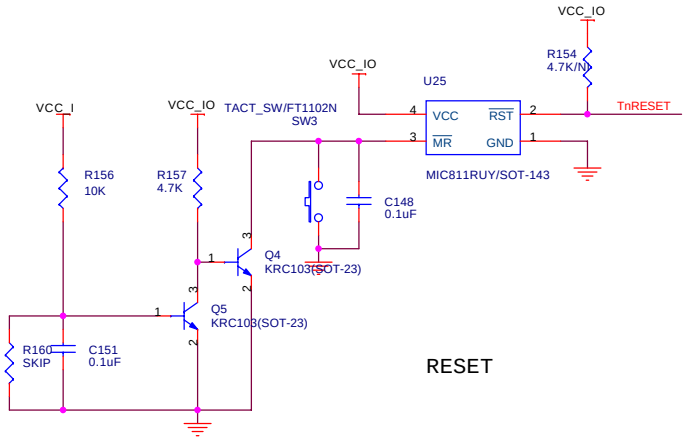

RESET

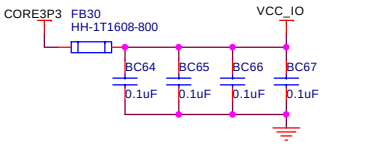

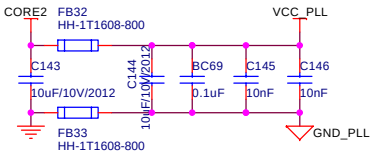

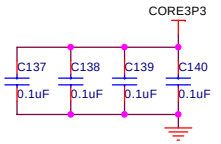

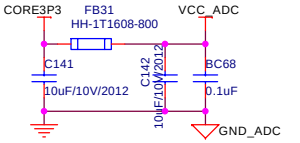

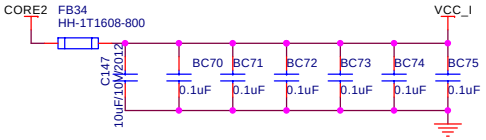

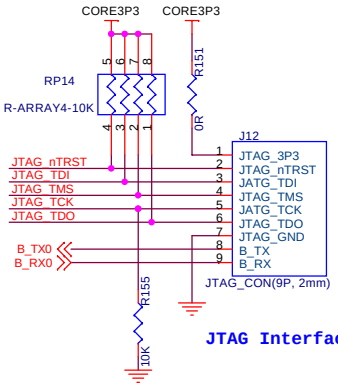

JTAG Interface

Title	MMSPII_POWER/RESET	
Size A3	Document Number Blue Bird	Rev 0.2
Date: Thursday, October 19, 2006	Sheet 10 of 14	

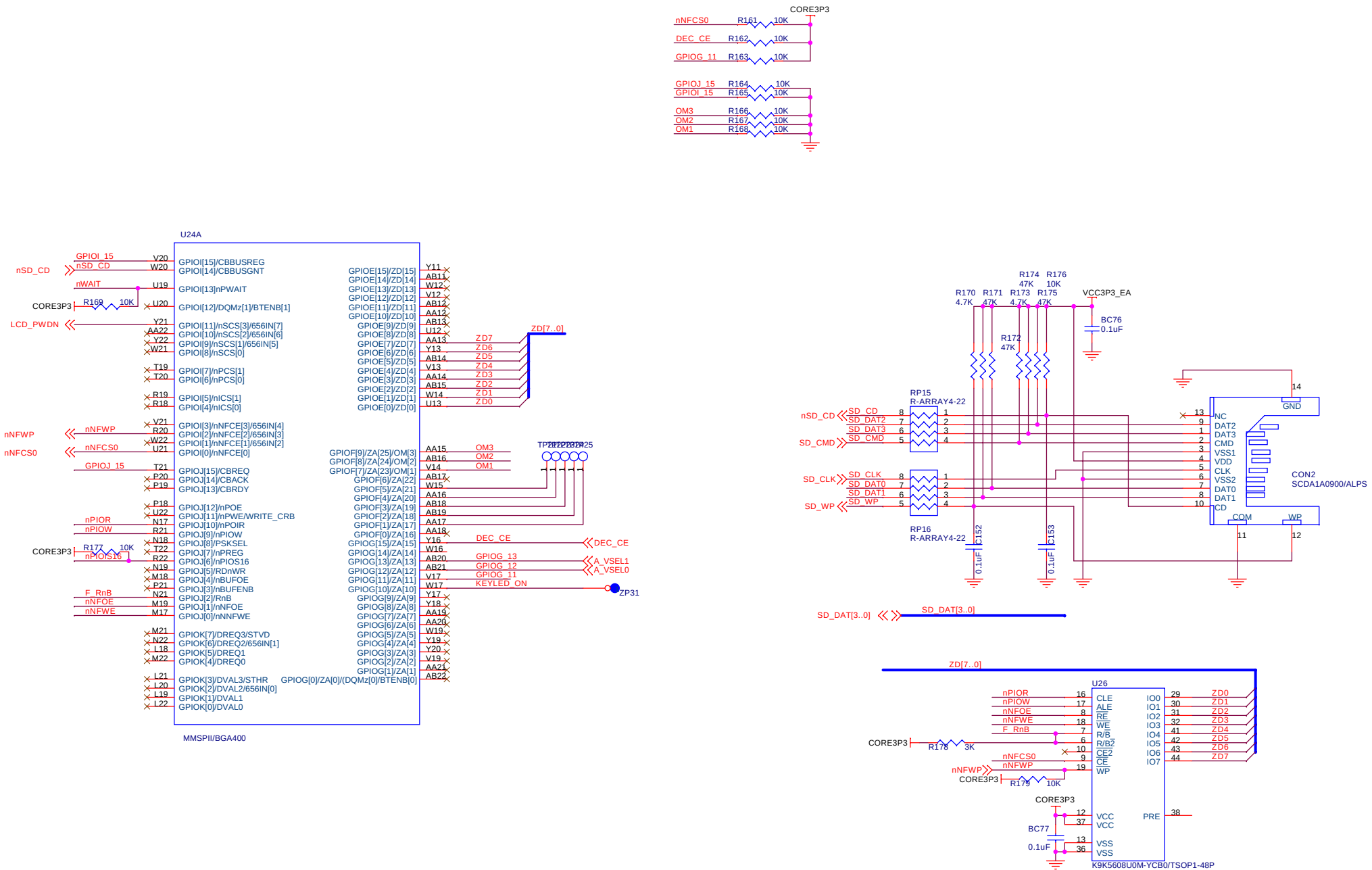

Title	MMSPII_FLASH/CF/GPIO	
Size A3	Document Number Blue Bird	Rev 0.2
Date: Thursday, October 19, 2006	Sheet 11 of 14	

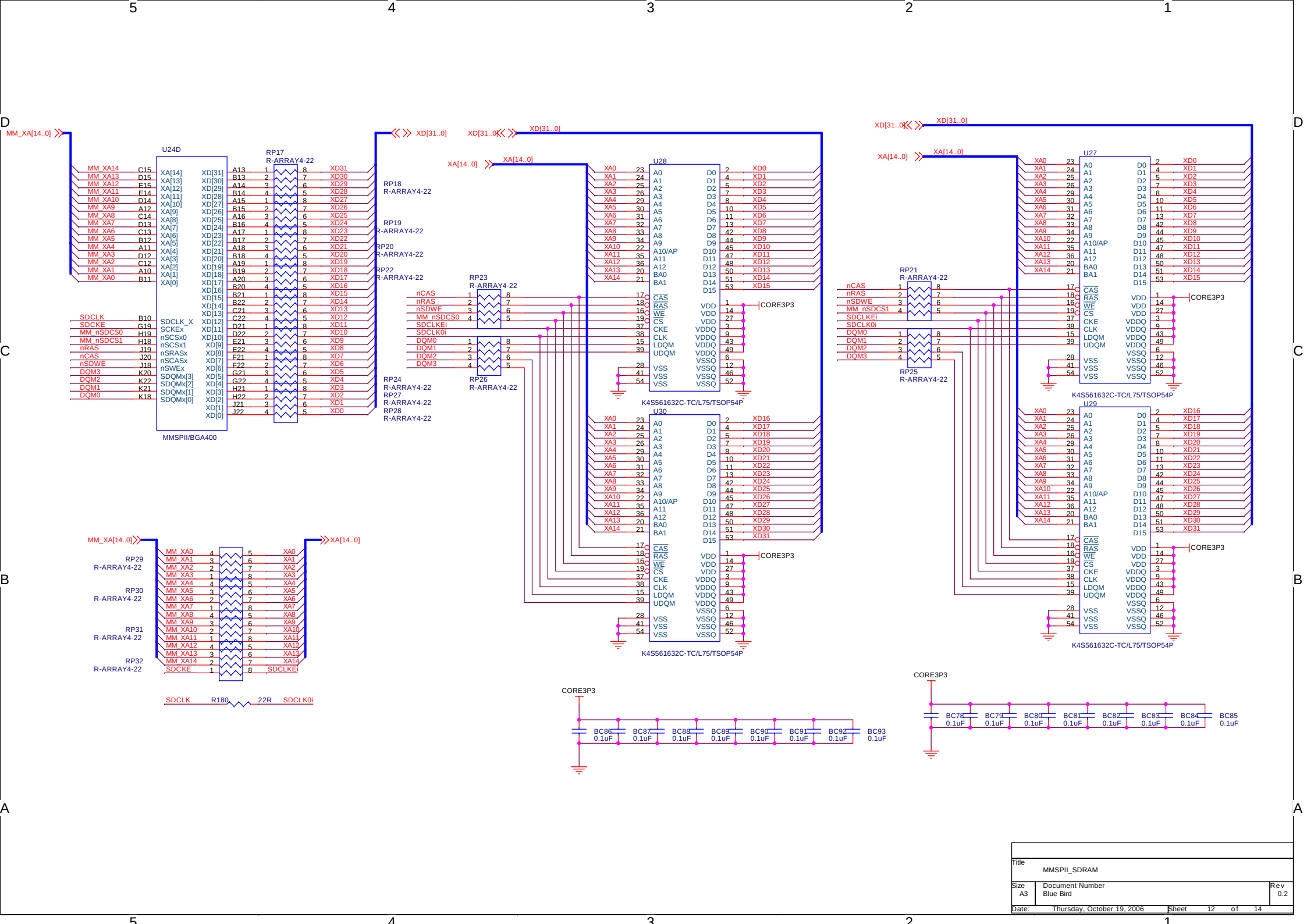

Title	MMSPII_SDRAM	
Size A3	Document Number Blue Bird	Rev 0.2
Date: Thursday, October 19, 2006	Sheet 12 of 14	

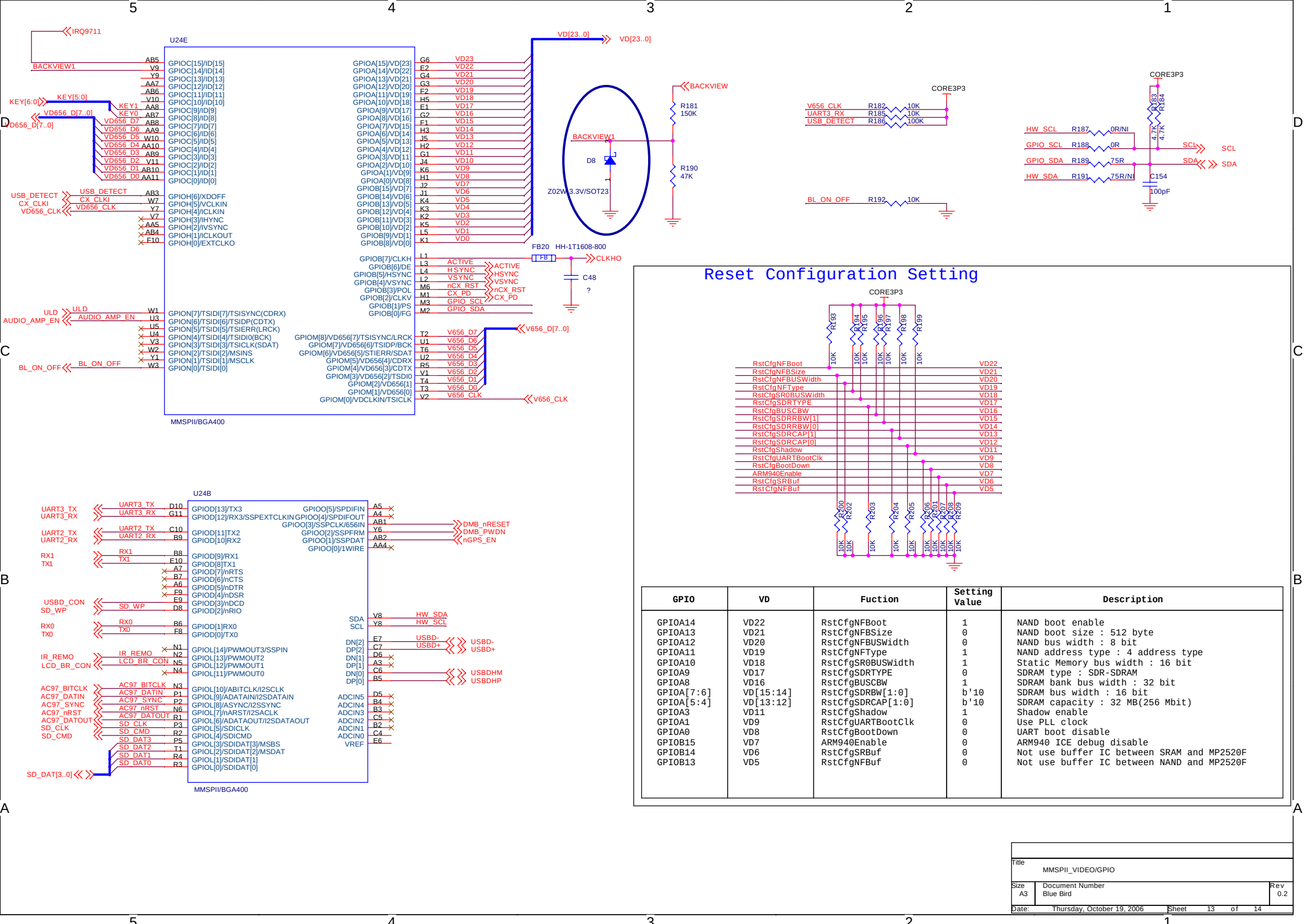

GPIO	VD	Fuction	Setting Value	Description
GPIOA14	VD22	RstCfgNFBoot	1	NAND boot enable
GPIOA13	VD21	RstCfgNFBSize	0	NAND boot size : 512 byte
GPIOA12	VD20	RstCfgNFBUSWidth	0	NAND bus width : 8 bit
GPIOA11	VD19	RstCfgNFType	1	NAND address type : 4 address type
GPIOA10	VD18	RstCfgSR0BUSWidth	1	Static Memory bus width : 16 bit
GPIOA9	VD17	RstCfgSDRTYPE	0	SDRAM type : SDR-SDRAM
GPIOA8	VD16	RstCfgBUSCBW	1	SDRAM bank bus width : 32 bit
GPIOA[7:6]	VD[15:14]	RstCfgSDRBW[1:0]	b'10	SDRAM bus width : 16 bit
GPIOA[5:4]	VD[13:12]	RstCfgSDRCAP[1:0]	b'10	SDRAM capacity : 32 MB(256 Mbit)
GPIOA3	VD11	RstCfgShadow	1	Shadow enable
GPIOA1	VD9	RstCfgUARTBootClk	0	Use PLL clock
GPIOA0	VD8	RstCfgBootDown	0	UART boot disable
GPIOB15	VD7	ARM940Enable	0	ARM940 ICE debug disable
GPIOB14	VD6	RstCfgSRBuf	0	Not use buffer IC between SRAM and MP2520F
GPIOB13	VD5	RstCfgNFBuf	0	Not use buffer IC between NAND and MP2520F

CPU : 2V-350mA,3.3V-60mA -> about 900mW
LCD about 100mW
Backlight 470mW
LED : 10EA * 10mA -> 100mA * 3.3V -> 330mW
DMB : 500mA * 3.3V -> 1650mW
FM TX : ?
FM RX : ?
MAX3232 : 600mW
GPS : 500mW/at 5V
WM9712L : 150mW
CX25874 : 650mW
SAA7113 : 500mW

2006.6.17일
BAT_IN NET TO BAT NET
NAND F NOMAL FIX
RADIO RX DEL
MIC SCH DEL

Title <Title>		
Size A4	Document Number Blue Bird	Rev 0.2
Date: Thursday, October 19, 2006	Sheet 14 of 14	