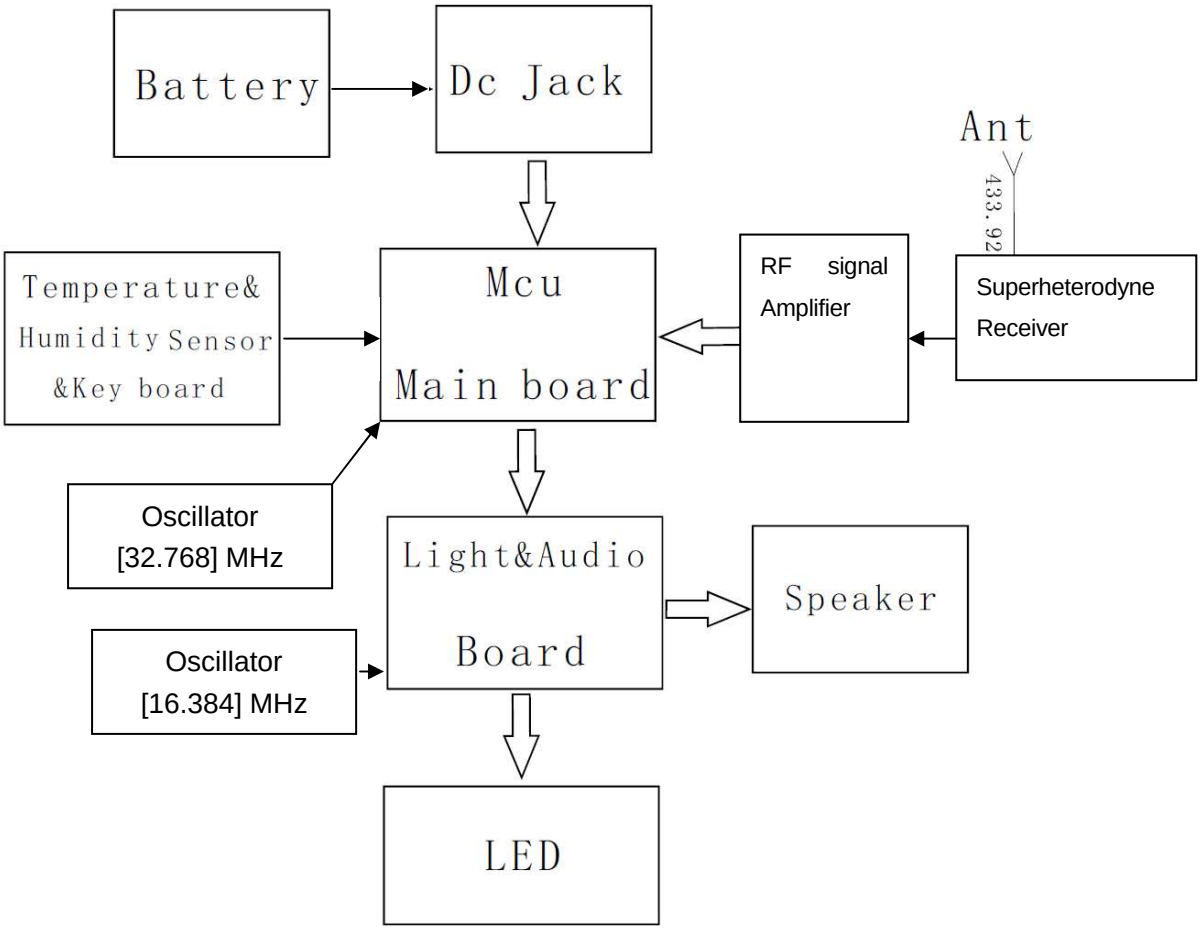
Battery
Dc Jack
Ant
433.92
Temperature&
Humidity Sensor
&Key board
Mcu
Main board
RF signal
Amplifier
Superheterodyne
Receiver
Oscillator
[32.768] MHz
Light&Audio
Board
Speaker
Oscillator
[16.384] MHz
LED